TURCK

Industrial Automation

SENSORS

Sense it! Connect it! Bus it! Solve it!

Sensor technology

Complete Catalog

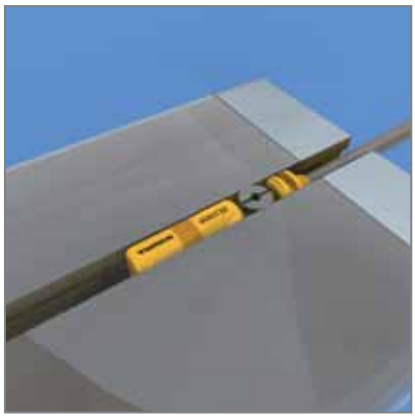

The company

The company

TURCK is one of the leading manufacturers in industrial automation. With more than 3.200 employees in 27 countries as well as sales partners in further 60 states, we are always close to you. As a specialist in sensor, fieldbus, connection and interface technology and also human-machine interfaces (HMI) and RFID, we offer efficient solutions for factory and process automation. With our state-of-the-art production facilities in Germany, Switzerland, the USA, Mexico and China we, as a family-owned company, are able to react quickly and flexibly to the demands of local markets.

The product portfolio

Whether applied in machine and plant construction, in the sectors of automotive, transport and handling, food and beverage or in the chemical or pharmaceutical industry, TURCK automation solutions and products increase the availability and efficiency of your systems. But this is not all! Through efficient standardization you also lower your costs for purchase, storage, installation and operational safety. We provide you with optimal solutions for your automation lines. This is possible thanks to the industry-specific knowledge we have acquired in close co-operation with our customers and through electronics development and production on the highest level.

Hans Turck GmbH & Co. KG ▪ Tel. +49 208 49 52-0 ▪ Fax +49 208 49 52-264

Our service

With nearly 50 years of experience and extensive know-how, we support you in each phase of the project, from a first analysis up to tailor-made solutions and commissioning of your application. Our priority is, to continuously enhance the efficiency and productivity of your production processes and machines. The excellent quality of our products combined with the support of our specialists and fast delivery service guarantees you high system availability.

The product data base

Whether software tools for programming, configuration or commissioning support, our data sheets or CAD data are available in 80 export formats. Our website www.turck.com helps you to find products and solutions fast, seven days a week, at any place worldwide and in nine different languages. You have access to nearly all products and solutions – clearly structured, completely documented and free for download.

Table of contents

Sensor technology – The full range

The catalog features more than 3000 devices for proximity, photoelectric, flow and position sensing. No matter the requirements on design, function or material quality: TURCK offers first-class products and high-efficiency solutions.
For an overview over the full product range and the different product areas, please see the table of contents. Each chapter contains a table providing details about product series and the most important features. If you are looking for special application solutions, please refer to the sensors for special applications. Should you already know the type code or the ID number of a sensor, please refer to the type index on page 752. It guides you to the desired product.

General information Page 638

Wiring diagrams Page 658

Dimension drawings Page 670

Index of types Page 752

***uprox*®+ factor 1 sensors**	Page 6
Inductive sensors - Complete product range	Page 42
Capacitive sensors	Page 156
Magnetic field sensors	Page 190
Photoelectric sensors	Page 210
Ultrasonic sensors	Page 298
Flow sensors	Page 324
Flow meters	Page 368
Pressure sensors	Page 388
Temperature sensors	Page 438
Inclinometers	Page 480
Linear position sensors	Page 492
Inductive angle sensors	Page 514
Encoders	Page 522
Indicators and lights	Page 538
Connecting and Mounting accessories	Page 560

Hans Turck GmbH & Co. KG ▪ Tel. +49 208 49 52-0 ▪ Fax +49 208 49 52-264

uprox®+ factor 1 sensors

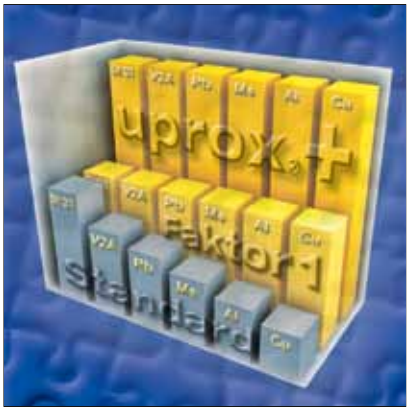

uprox®+: The new generation of inductive sensors

The deployment of inductive sensors faces complex and continuously growing demands of modern industrial automation. In order to meet these challenges, an end-to-end solution is required, ranging from construction, purchase and system engineering to operation and maintenance.
With the development of the new *uprox*®+ factor 1 sensors, TURCK demonstrates impressively how to cut down on process cost thanks to innovative sensor technology and how system availability and performance can be improved. The *uprox*®+ sensors operate with new, non-ferrous coils and circuit boards, offering completely new application possibilities compared to conventional sensors with ferrite core and wound coil.
All inductive sensors of the new *uprox*®+ generation operate with highest switching distances, without reduction factor (i.e. same operating distance on all metals), are weld resistant, feature an extended temperature range, excellent EMC properties and are easily and flexibly mounted.

Advantages for the user: Only a few *uprox*®+ sensors are needed to cover a broad range of applications. Standardization is thus guaranteed, purchase and logistics are simplified and the variety of types as well as the costs are reduced to a manageable amount.
The sensors are available as standard versions in chrome-plated brass barrels or in stainless steel housings with LCP front cap and a special double lip seal for heavy use or sudden temperature changes. These are typical ambient conditions faced in cleaning processes of the food and tooling industry. The PTFE-coated brass versions offer extra protection against sparks and weld-splatter as experienced in the automotive industry during car body welding.
The sensors are incorporated in a rugged, rectangular plastic housing, needing little space while offering high switching distances. We also offer other rectangular designs with rotatable active face.

Our strengths – Your advantages

Factor 1

The innovative *uprox*®+ sensors set new benchmarks in the field of metal detection. Thanks to the non-ferrous coil and circuit-board the sensors operate without reduction factor. Materials such as iron, stainless steel, copper, aluminium and brass are detected at the same distance and with the highest precision. Any application can therefore profit from the unique power spectrum of the *uprox*®+ sensors

Highest switching distance

The new *uprox*®+ sensors have the same switching distance on all metals. Owing to their new patented coil technology, the switching distance is up to 250% higher than that of conventional inductive sensors with ferrite core. This means, that the *uprox*®+ sensors outclass any standard sensor of the same size in terms of switching distance and other features.

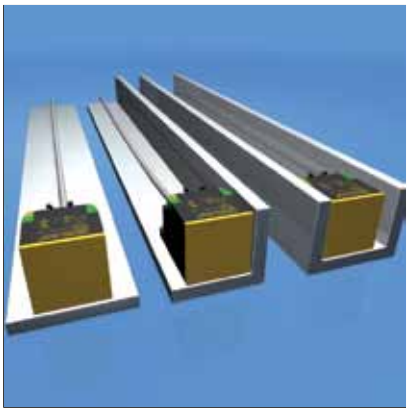

Non-flush mountable sensors are partly embeddable

The *uprox*®+ rectangular sensors can be mounted in many different ways. All non-flush mountable *uprox*®+ rectangular types are 4-side embeddable with reduced switching distance. Additional mechanical components and accessories are not needed, making installation not only cheaper but also quicker and easier. The unique flexibility of non-flush mountable sensors is achieved through integrated pre-attenuation protection: This allows the sensors to be mounted to the upper edge of the barrel.

Hans Turck GmbH & Co. KG ▪ Tel. +49 208 49 52-0 ▪ Fax +49 208 49 52-264

Your advantages

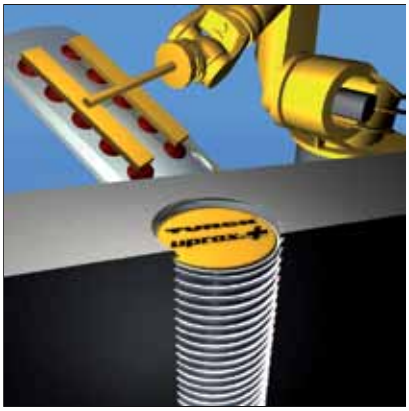

Recessed mounting of flush sensors

The new *uprox*®+ sensors only require small metal-free zones. No matter which sensor type: Flush mounting requires no compromises. The sensors are screwed in with half a turn to protect them against mechanical damage. This guarantees safe operation in all mounting positions!

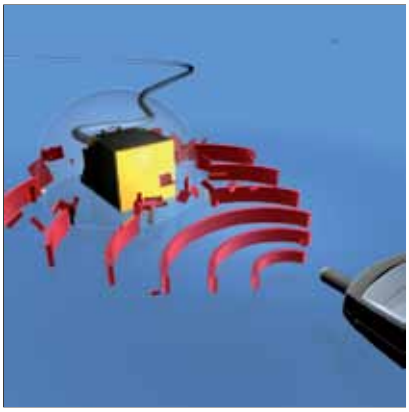

Excellent EMC properties and magnetic field resistance

uprox®+ sensors fulfill the EN 60947-5-2 requirements and pass tests successfully according to EN 61000-4-6 „conducted interferences“. They are also immune to strong magnetic fields, developing for instance during electrical welding processes or near lifts and electrical furnaces.

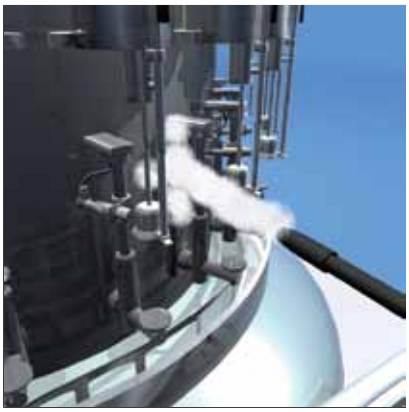

High tightness and resistance

A special double lip seal in the front cap and at the connector insert prevent the ingress of liquids even during high pressure cleaning procedures. *uprox*®+ sensors thus exceed the requirements of the protection ratings IP68 and IP69K by far. The threaded barrel and the front cap of the WD series are made of materials that are resistant to all common acid and alkaline cleaning agents and disinfectants. Any damage caused by aggressive cleansers is ruled out.

Our strengths – Your advantages

Efficient standardization

One *uprox*®+ sensor replaces many conventional sensor types. Purchase and logistics as well as end-user service are simplified.

- The widest possible application range is achieved with only a few sensor versions
- Low average prices because special devices are not required
- Minimized training effort due to a lean product line

Maximum planning freedom

uprox®+ extends the performance spectrum of sensor technology and paves the way for the development of new machines and systems:

- Many different solutions are possible with only a few device types
- Great flexibility in machine planning, less construction errors, elimination of unnecessary conflicts between mechanical and electrical construction
- Easy mounting

Extremely service-friendly

uprox®+ sensors can be mounted in many ways and are easy to maintain.

- Convenient adjustment thanks to highest switching distances
- Maximum freedom for commissioning achieved through safe operating conditions in recessed and partially embedded mounting positions
- Minimum maintenance and staff training due to a reduced variety of sensor types

Hans Turck GmbH & Co. KG ▪ Tel. +49 208 49 52-0 ▪ Fax +49 208 49 52-264

Your advantages

High system availability

uprox®+ sensors minimize downtimes of machines and systems:

- Less mechanical damage through recessed mounting
- Protection against ingress of liquids during cleaning processes
- Prevention of downtimes due to the excellent resistance of the materials used against acid and alkaline cleaning agents and disinfectants.
- Short downtimes through high availability of spare parts at lowest costs.

Type code

B	i	4	U	–	M12	.	–	A	P	6	X	–	H1	1	4	1	/	L100

B	i	4	U	Functional principle	–	M12	.	Design	–	A	P	6	X	Electrical version	–

Special functions

U	*uprox*® or *uprox*®+ factor 1 sensors

Rated operating distance

…	[mm]

Functional principle

i	inductive

Fitting

B	flush
N	non-flush

Additional information

E	long-sized housing
M	medium-sized housing
S	lateral active face
TC	terminal chamber with straight/angled cable outlet
WD	wash down applications

Housing

CK40 CP40 QV40	rectangular, 40 x 40 mm flexible active face
CP80	rectangular, 80 x 80 mm
EG EM	threaded barrel, stainless steel, Ø in [mm]
EGT	threaded barrel, stainless steel, PTFE-coated, Ø in [mm]
EH	smooth barrel, stainless steel, different diameters
K	smooth barrel, plastic, Ø in [mm]
M	threaded barrel, chrome-plated brass, Ø in [mm]
MT	threaded barrel, PTFE-coated brass Ø in [mm]
Q	rectangular housing
QP	rectangular, 20 x 8 x 32 mm

Indication

X	LED
X…	number of LEDs or multicolor LED

Voltage range

4	10…65 VDC, Ⓚ
44	10…55 VDC, Ⓚ
6	10…30 VDC, Ⓚ

Output mode

P	PNP
N	NPN
D	2-wire DC, non-polarized

Output function

A	working current NO
R	closed current NC
V	changeover contact

Hans Turck GmbH & Co. KG ▪ Tel. +49 208 49 52-0 ▪ Fax +49 208 49 52-264

H1	1	4	1	Electrical connection: connector	/	L100	Special versions

Assignment
- **1** standard assignment or customized

Number of contacts
- **3** 3 contacts
- **4** 4 contacts

Connector type
- **1** straight

Connector type
- **H1** connector M12 x 1
- **V1** connector M8 x 1 / Ø 8 mm

Features
- **F2** offset oscillation frequency
- **L80** device length 80 mm
- **L100** device length 100 mm
- **XOR** irradiated cable, resistant to weld splatter

x.x	PSG	3	M	Electrical connection: Cable connection	/

Assignment
- **M** rotatable nut
- **S** fixed thread

Number of contacts
- **…** … contacts

Connector type
- **PSG** connector M8 x 1, straight
- **RS** connector M12 x 1, straight

Cable length
- **…** [m]

…M	Cable connection

Cable connection
- **…M** cable length [m]

Designs and variants

	Design	Switching distance	Electrical connection	Output	Page
Q8SE	Rectangular Q8SE 8 x 8 x 40 mm	4 mm,	2 m cable male, M8 x 1	, PNP , NPN , PNP	17
Q08	Rectangular Q08 20 x 8 x 32 mm	8 mm,	2 m cable male, Ø8 mm	, PNP , NPN	17
QP08	Rectangular QP08 20 x 8 x 32 mm	10 mm,	2 m cable 0.3 m cable with connector, M8 x 1	, PNP , NPN	18
Q10S	Rectangular Q10S 16 x 10.2 x 27.8 mm	5 mm,	2 m cable 0.3 m cable with connector, M8 x 1	, PNP , NPN	18
Q12	Rectangular Q12 26 x 12 x 40 mm	5 mm,	2 m cable male, M8 x 1 male, M12 x 1	, PNP , NPN	19,
CK40	Rectangular CK40 40 x 40 x 65 mm	30 mm, 20 mm, 15 mm, 50 mm, 35 mm,	male, M12 x 1	, PNP , NPN , 2-wire , PNP , NPN	21
QV40	Rectangular QV40 40 x 40 x 65 mm	20 mm, 50 mm,	male, M12 x 1	, PNP	21
CP40	Rectangular CP40 40 x 40 x 114 mm	30 mm, 20 mm, 50 mm,	Terminal chamber	, PNP , NPN , PNP , NPN	22

Hans Turck GmbH & Co. KG ▪ Tel. +49 208 49 52-0 ▪ Fax +49 208 49 52-264

ts
id variants

	Design	Switching distance	Electrical connection	Output	Page
Q42	Rectangular Q42 42.5 x 42.5 x 68 mm	50 mm,	male, M12 x 1	, PNP	22
Q80	Rectangular Q80 80 x 40 x 92 mm	50 mm, 75 mm,	male, M12 x 1	, PNP , NPN , PNP , NPN	23
K90	Rectangular K90SR 75 x 60 x 130 mm	100 mm,	Terminal chamber male, M12 x 1	, PNP , NPN	23
EH6,5	Smooth barrel 6.5 mm Ø 6.5 x 42 mm Ø 6.5 x 49 mm	2 mm, 6 mm,	2 m Cable male, M8 x 1	, PNP , NPN	25
EG08	Threaded barrel M8 x 1 Ø 8 x 42 mm Ø 8 x 49 mm Ø 8 x 57 mm	2 mm, 6 mm,	2 m cable male, M8 x 1 male, M12 x 1	, PNP , NPN , PNP	25, 33
M12	Threaded barrel M12 x 1 Ø 12 x 52 mm Ø 12 x 54 mm Ø 12 x 62 mm Ø 12 x 64 mm Ø 12 x 80 mm Ø 12 x 100 mm	4 mm, 10 mm, 2 mm, 5 mm,	Terminal chamber, Removable cage clamp terminals 2 m cable 0.3 m cable with connector, M12 x 1 male, M12 x 1	, 2-wire , NPN , PNP , PNP , PNP , NPN	26, 27, 34, 39
M18	Threaded barrel M18 x 1 Ø 18 x 52 mm Ø 18 x 54 mm Ø 18 x 61.5 mm Ø 18 x 64 mm Ø 18 x 72 mm Ø 18 x 81 mm	5 mm, 8 mm, 10 mm, 15 mm,	Terminal chamber, Removable cage clamp terminals 2 m cable male, M12 x 1 0.3 m cable with connector, M12 x 1	, PNP , NPN , 2-wire , PNP , PNP , NPN	27, 28, 34, 35, 39
M30	Threaded barrel M30 x 1.5 Ø 30 x 62 mm Ø 30 x 64 mm Ø 30 x 66 mm Ø 30 x 95 mm	10 mm, 30 mm, 15 mm, 15 mm,	2 m cable male, M12 x 1 0.3 m cable with connector, M12 x 1 Terminal chamber, Removable cage clamp terminals	, 2-wire , NPN , PNP , NPN , PNP	29, 30, 35, 36, 40

uprox®+ compact rectangular design

The *uprox*®+ rectangular types can be moutned in many ways and in many applications. All non-flush rectangular *uprox*®+ sensors are 4-side embeddable with reduced switching distance. Thus additional mechanical components and accessories are not required. As a result, installation is cost-effective, quicker and easier.

Features

- Partially embeddable non-flush rectangular sensors
- Highest switching distance
- Factor 1 for all metals
- Excellent EMC properties and magnetic field resistance

Properties

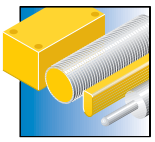

Designs
From the small space-saving Q8SE to the standardized Q12 version

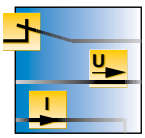

Electrical version
3/4-wire NO/NC contact as well as antivalent output, PNP and NPN

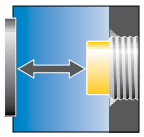

Switching distances
High switching distances between 4 and 12 mm on all metals

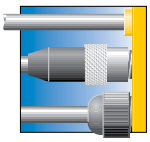

Electrical connections
Connection cable 2m, males M12 x 1, M8 x 1 or Ø 8 mm as well as M8 pigtail

Materials
Rugged and chemical resistant plastic and metal housings

Special features
High protection class IP68
Side-by-side, space-saving installation

Internet link
Scan the QR code to access our products on the internet

Hans Turck GmbH & Co. KG ▪ Tel. +49 208 49 52-0 ▪ Fax +49 208 49 52-264

Q8SE

General data

Operating voltage	10…30 VDC	**Switching distance**	4 mm,
Housing material	PP	**Operating current [mA]**	150, Ⓚ
Ambient temperature	-30…+85 °C	**Dimensions**	8 x 8 x 40 mm

Lateral active face

Types and data – selection table

Type	Connection	Outputv	w	d
NI4U-Q8SE-AP6X	2 m cable	, PNP	w001	d001
NI4U-Q8SE-AP6X-V1131	male, M8 x 1	, PNP	w002	d002
NI4U-Q8SE-RP6X-V1131	male, M8 x 1	, PNP	w003	d002

Many different types available, also as NPN version, see type code

Q08

General data

Operating voltage	10…30 VDC	**Output**	, PNP
Switching distance	8 mm,	**Housing material**	GD-Zn
Operating current [mA]	200, Ⓚ	**Ambient temperature**	-25…+70 °C
Dimensions	20 x 8 x 32 mm		

Types and data – selection table

Type	Connection	w	d
BI8U-Q08-AP6X2	2 m cable	w001	d003
BI8U-Q08-AP6X2-V1131	male, Ø 8 mm	w002	d004

Many different types available, also as NPN version, see type code

w Wiring diagrams on page 640 d Dimension drawing on page 652 Accessories on page Seite 561

QP08

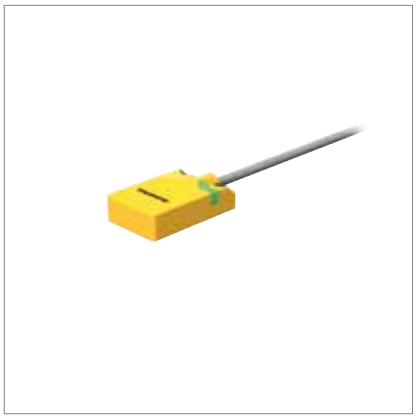

General data

Operating voltage	10…30 VDC	**Output**	_\‾, PNP
Switching distance	10 mm,	**Housing material**	PP
Operating current [mA]	200, Ⓚ	**Ambient temperature**	-25…+70 °C
Dimensions	20 x 8 x 32 mm		

Types and data – selection table

Type	Connection	w	d
NI10U-QP08-AP6X2	2 m cable	w001	d005
NI10U-QP08-AP6X2-0,3-PSG3M	0.3 m Cable with connector, M8 x 1	w002	d006

Many different types available, also as NPN version, see type code

Q10S

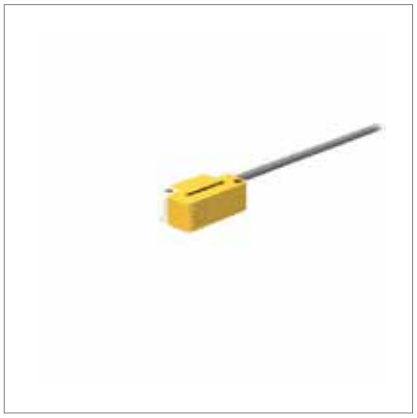

General data

Operating voltage	10…30 VDC	**Output**	_\‾, PNP
Switching distance	5 mm,	**Housing material**	PP
Operating current [mA]	150, Ⓚ	**Ambient temperature**	-30…+85 °C
Dimensions	16 x 10.2 x 27.8 mm		

Types and data – selection table

Type	Connection	w	d
NI5U-Q10S-AP6X	2 m cable	w001	d007
NI5U-Q10S-AP6X-0,3-PSG3M	0.3 m Cable with connector, M8 x 1	w002	d008

Many different types available, also as NPN version, see type code

Q12

General data

Operating voltage	10…30 VDC	**Output**	, PNP
Switching distance	5 mm,	**Housing material**	PA
Operating current [mA]	200, Ⓚ	**Ambient temperature**	-25…+70 °C
Dimensions	26 x 12 x 40 mm		

Types and data – selection table

Type	Connection	w	d
BI5U-Q12-AP6X2	2 m cable	w001	d009
BI5U-Q12-AP6X2-V1131	male, M8 x 1	w002	d010
BI5U-Q12-AP6X2-V1131/F2	male, M8 x 1	w002	d010
BI5U-Q12-AP6X2-H1141	male, M12 x 1	w002	d011

Many different types available, also as NPN version, see type code

w Wiring diagrams on page 658 d Dimension drawing on page 670 Accessories on page 560

uprox®+ large rectangular design

The *uprox*®+ rectangular types offer highest flexibility in terms of installation, thus providing completely new application possibilities. All non-flush rectangular *uprox*®+ sensors are 4-side embeddable with reduced switching distance. Additional mechanical components and accessories are not required. As a result, installation is cost-effective, quicker and easier.

Features

- Highest switching distance
- Factor 1 for all metals
- Excellent EMC properties and magnetic field resistance
- Non-flush rectangular sensors are partially embeddable

Properties

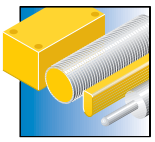

Designs
From the variable 40 x 40 mm standard CK 40 to the large Ø 90 mm K90SR

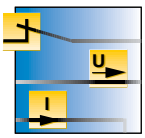

Electrical versions
3/4-wire NO/NC contact as well as antivalent output, PNP and NPN

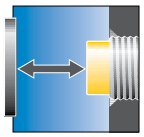

Switching distances
Large switching distances between 20 mm and max.100 mm on all metals

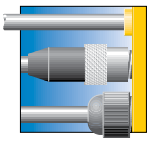

Electrical connections
2 m connection cable or male M12 x 1

Materials
Rugged plastic housing for harsh and uncompromising application conditions

Special features
Protection class IP68; high luminance corner LEDs; variable orientation of active face in 5 directions

Internet link
Scan the QR code to access our products on the internet

Hans Turck GmbH & Co. KG ▪ Tel. +49 208 49 52-0 ▪ Fax +49 208 49 52-264

CK40

General data

Connection	male, M12 x 1	**Housing material**	PBT
Dimensions	40 x 40 x 65 mm		

Variable orientation of active face in 5 directions

Types and data – selection table

Type	Operating voltage	Output	Switching distance	Operating current	Ambient temperature	w	d
BI30U-CK40-AP6X2-H1141	10…30 VDC	, PNP	30 mm,	200, Ⓚ	-10…+60 °C	w002	d012
BI20U-CK40-AP6X2-H1141	10…30 VDC	, PNP	20 mm,	200, Ⓚ	-30…+85 °C	w002	d013
BI15U-CK40-AD4X-H1144	10…65 VDC	, 2-wire	15 mm,	100, Ⓚ	-25…+70 °C	w004	d013
NI50U-CK40-AP6X2-H1141	10…30 VDC	, PNP	50 mm,	200, Ⓚ	-30…+85 °C	w002	d012
NI50U-CK40-VP4X2-H1141	10…65 VDC	, PNP	50 mm,	200, Ⓚ	-30…+85 °C	w005	d012
NI35U-CK40-AD4X-H1144	10…65 VDC	, 2-wire	35 mm,	100, Ⓚ	-25…+70 °C	w004	d012

Many different types available, also as NPN version, see type code

QV40

General data

Connection	male, M12 x 1	**Operating voltage**	10…30 VDC
Output	, PNP	**Housing material**	PBT
Operating current [mA]	200, Ⓚ	**Ambient temperature**	-30…+85 °C
Dimensions	40 x 40 x 65 mm		

Variable orientation of active face in 5 directions

Types and data – selection table

Type	Switching distance	w	d
BI20U-QV40-AP6X2-H1141	20 mm,	w002	d014
NI50U-QV40-AP6X2-H1141	50 mm,	w002	d014

w Wiring diagrams on page 658 d Dimension drawing on page 670 Accessories on page 560

CP40

General data

Connection	Terminal chamber	**Housing material**	PBT
Operating current [mA]	200, Ⓚ	**Dimensions**	40 x 40 x 114 mm

Variable orientation of active face in 9 directions

Types and data – selection table

Type	Operating voltage	Output	Switching distance	Ambient temperature	w	d
BI30U-CP40-AP6X2	10…30 VDC	, PNP	30 mm,	-10…+60 °C	w006	d015
BI20U-CP40-AP6X2	10…30 VDC	, PNP	20 mm,	-30…+85 °C	w006	d015
NI50U-CP40-AP6X2	10…30 VDC	, PNP	50 mm,	-30…+85 °C	w006	d015
NI50U-CP40-VP4X2	10…65 VDC	, PNP	50 mm,	-30…+85 °C	w007	d015

Many different types available, also as NPN version, see type code

Q42

General data

Connection	male, M12 x 1	**Operating voltage**	10…30 VDC
Output	, PNP	**Switching distance**	50 mm,
Housing material	PA	**Operating current [mA]**	200, Ⓚ
Ambient temperature	-40…+100 °C	**Dimensions**	42.5 x 42.5 x 68 mm

Types and data – selection table

Type	w	d
NI50U-Q42FWD-VP6X-H1141	w005	d016
NI50U-Q42TWD-VP6X-H1141	w005	d017

Hans Turck GmbH & Co. KG ▪ Tel. +49 208 49 52-0 ▪ Fax +49 208 49 52-264

Q80

General data

Connection	male, M12 x 1	**Housing material**	PBT
Operating current [mA]	200, Ⓚ	**Ambient temperature**	-25…+70 °C
Dimensions	80 x 40 x 92 mm		

Types and data – selection table

Type	Operating voltage	Output	Switching distance	w	d
BI50U-Q80-AP6X2-H1141	10…30 VDC	, PNP	50 mm,	w002	d018
BI50U-Q80-VP4X2-H1141	10…65 VDC	, PNP	50 mm,	w005	d018
NI75U-Q80-AP6X2-H1141	10…30 VDC	, PNP	75 mm,	w002	d018
NI75U-Q80-VP4X2-H1141	10…65 VDC	, PNP	75 mm,	w005	d018

Many different types available, also as NPN version, see type code

K90

General data

Operating voltage	10…65 VDC	**Output**	, PNP
Switching distance	100 mm,	**Housing material**	PBT
Operating current [mA]	200, Ⓚ	**Ambient temperature**	-30…+85 °C
Dimensions	75 x 60 x 130 mm		

Types and data – selection table

Type	Connection	w	d
NI100U-K90SR-VP4X2	Terminal chamber	w007	d019
NI100U-K90SR-VP4X2-H1141	male, M12 x 1	w005	d020

Many different types available, also as NPN version, see type code

w Wiring diagrams on page 658 d Dimension drawing on page 670 Accessories on page 560

uprox®+ cylindrical designs

All sensors of the *uprox*®+ series owe many new features to their new multi-coil system, providing them with distinct advantages over conventional inductive sensors. The Ø 6.5 mm, M8 x 1, M12 x 1, M18 x 1 and M30 x 1.5 standard types are available as chrome-plated versions (M12, M18, M30 x 1.5) or as stainless steel versions (EH6.5, EG08, EM12, EM18 and EM30) and excel in maximum operating distances, no reduction factors, high magnetic-field immunity, excellent EMC properties and versatile mounting options.

Features

- Recessed mounting of flush sensors
- Non-flush mountable sensors can be embedded to the upper edge of the barrel
- Excellent EMC properties and magnetic field resistance
- Highest switching distance
- Factor 1 for all metals

Properties

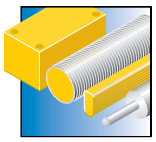

Designs
From the small Ø 6.5 mm smooth barrel to the large threaded barrel version M30 x 1.5

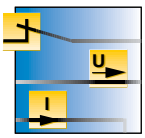

Electrical versions
3/4-wire NO/NC contact as well as antivalent output, PNP and NPN

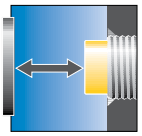

Switching distances
From 2 mm flush to 30 mm non-flush, on all metals

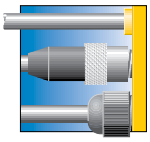

Electrical connections
2 m connection cable, male M12 x 1 or M8 x 1

Materials
Threaded barrels available as nickel-plated brass or stainless steel versions

Special features
Protection class IP68; different thread sizes for individual requirements

Internet link
Scan the QR code to access our products on the internet

Hans Turck GmbH & Co. KG ▪ Tel. +49 208 49 52-0 ▪ Fax +49 208 49 52-264

EH6.5

General data

Operating voltage	10…30 VDC	**Output**	__, PNP
Housing material	V2A (1.4301)	**Operating current [mA]**	150, Ⓚ

Types and data – selection table

Type	Connection	Switching distance	Ambient temperature	Dimensions	w	d
BI2U-EH6,5-AP6X	2 m cable	2 mm,	-30…+85 °C	Ø 6.5 x 42 mm	w001	d021
BI2U-EH6,5-AP6X-V1131	male, M8 x 1	2 mm,	-30…+85 °C	Ø 6.5 x 49 mm	w002	d022
NI6U-EH6,5-AP6X	2 m cable	6 mm,	-25…+70 °C	Ø 6.5 x 42 mm	w001	d023
NI6U-EH6,5-AP6X-V1131	male, M8 x 1	6 mm,	-25…+70 °C	Ø 6.5 x 49 mm	w002	d024

Many different types available, also as NPN version, see type code

EG08

General data

Operating voltage	10…30 VDC	**Housing material**	V4A (1.4404)
Operating current [mA]	150, Ⓚ		

Types and data – selection table

Type	Connection	Output	Switching distance	Ambient temperature	Dimensions	w	d
BI2U-EG08-AP6X	2 m cable	__, PNP	2 mm,	-30…+85 °C	Ø 8 x 42 mm	w001	d025
BI2U-EG08-AP6X-V1131	male, M8 x 1	__, PNP	2 mm,	-30…+85 °C	Ø 8 x 49 mm	w002	d026
BI2U-EG08-RP6X-V1131	male, M8 x 1	⊥_, PNP	2 mm,	-30…+85 °C	Ø 8 x 49 mm	w003	d026
BI2U-EG08-AP6X-H1341	male, M12 x 1	__, PNP	2 mm,	-30…+85 °C	Ø 8 x 57 mm	w002	d027
BI2U-EG08-RP6X-H1341	male, M12 x 1	⊥_, PNP	2 mm,	-30…+85 °C	Ø 8 x 57 mm	w008	d027
NI6U-EG08-AP6X	2 m cable	__, PNP	6 mm,	-25…+70 °C	Ø 8 x 42 mm	w001	d028
NI6U-EG08-AP6X-V1131	male, M8 x 1	__, PNP	6 mm,	-25…+70 °C	Ø 8 x 49 mm	w002	d029
NI6U-EG08-RP6X-V1131	male, M8 x 1	⊥_, PNP	6 mm,	-25…+70 °C	Ø 8 x 49 mm	w003	d029
NI6U-EG08-AP6X-H1341	male, M12 x 1	__, PNP	6 mm,	-25…+70 °C	Ø 8 x 57 mm	w002	d030
NI6U-EG08-RP6X-H1341	male, M12 x 1	⊥_, PNP	6 mm,	-25…+70 °C	Ø 8 x 57 mm	w008	d030

Many different types available, also as NPN version, see type code

w Wiring diagrams on page 658 d Dimension drawing on page 670 Accessories on page 560

M12 – 2-wire DC

General data

Operating voltage	10…65 VDC	**Output**	__, 2-wire
Housing material	CuZn-Cr	**Operating current [mA]**	100, Ⓚ
Ambient temperature	0…+70 °C		

Types and data – selection table

Type	Connection	Switching distance	Dimensions	w	d
BI2U-M12E-AD4X	2 m cable	2 mm,	Ø 12 x 64 mm	w009	d031
BI2U-M12E-AD4X-H1144	male, M12 x 1	2 mm,	Ø 12 x 62 mm	w004	d032
NI5U-M12E-AD4X	2 m cable	5 mm,	Ø 12 x 64 mm	w009	d033
NI5U-M12E-AD4X-H1144	male, M12 x 1	5 mm,	Ø 12 x 62 mm	w004	d034

M12 – 3-wire DC

General data

Operating voltage	10…30 VDC	**Housing material**	CuZn-Cr
Operating current [mA]	200, Ⓚ	**Ambient temperature**	-30…+85 °C

Types and data – selection table

Type	Connection	Output	Switching distance	Dimensions	w	d
BI4U-M12-AP6X	2 m cable	__, PNP	4 mm,	Ø 12 x 54 mm	w001	d035
BI4U-M12-AP6X-V1131	male, M8 x 1	__, PNP	4 mm,	Ø 12 x 52 mm	w002	d036
BI4U-M12-AP6X-H1141	male, M12 x 1	__, PNP	4 mm,	Ø 12 x 52 mm	w002	d037
Bi4U-M12-RP6X-H1141	male, M12 x 1	__, PNP	4 mm,	Ø 12 x 52 mm	w008	d037
NI10U-M12-AP6X	2 m cable	__, PNP	10 mm,	Ø 12 x 54 mm	w001	d038
NI10U-M12-AP6X-V1131	male, M8 x 1	__, PNP	10 mm,	Ø 12 x 52 mm	w002	d039
NI10U-M12-AP6X-H1141	male, M12 x 1	__, PNP	10 mm,	Ø 12 x 52 mm	w002	d040
NI10U-M12-RP6X-H1141	male, M12 x 1	__, PNP	10 mm,	Ø 12 x 52 mm	w008	d040

Many different types available, also as NPN version, see type code

M12 – 4-wire DC

General data

Operating voltage	10…55 VDC	**Output**	, PNP
Housing material	CuZn-Cr	**Operating current [mA]**	200, Ⓚ
Ambient temperature	-30…+85 °C		

Types and data – selection table

Type	Connection	Switching distance	Dimensions	w	d
BI4U-M12E-VP44X	2 m cable	4 mm,	Ø 12 x 64 mm	w010	d031
BI4U-M12E-VP44X-H1141	male, M12 x 1	4 mm,	Ø 12 x 62 mm	w011	d032
BI4U-M12-VP44X-H1141 L80	male, M12 x 1	4 mm,	Ø 12 x 80 mm	w011	d041
BI4U-M12-VP44X-H1141 L100	male, M12 x 1	4 mm,	Ø 12 x 100 mm	w011	d042
NI10U-M12E-VP44X	2 m cable	10 mm,	Ø 12 x 64 mm	w010	d033
NI10U-M12E-VP44X-H1141	male, M12 x 1	10 mm,	Ø 12 x 62 mm	w011	d034

Many different types available, also as NPN version, see type code

M18 – 2-wire DC

General data

Operating voltage	10…65 VDC	**Output**	, 2-wire
Housing material	CuZn-Cr	**Operating current [mA]**	100, Ⓚ
Ambient temperature	-25…+70 °C		

Types and data – selection table

Type	Connection	Switching distance	Dimensions	w	d
BI5U-M18M-AD4X	2 m cable	5 mm,	Ø 18 x 64 mm	w009	d043
BI5U-M18M-AD4X-H1144	male, M12 x 1	5 mm,	Ø 18 x 61.5 mm	w004	d044
NI10U-M18M-AD4X	2 m cable	10 mm,	Ø 18 x 64 mm	w009	d045
NI10U-M18M-AD4X-H1144	male, M12 x 1	10 mm,	Ø 18 x 61.5 mm	w004	d046

w Wiring diagrams on page 658 d Dimension drawing on page 670 Accessories on page 560

M18 – 3-wire DC

General data

Operating voltage	10…30 VDC	**Operating current [mA]**	200, Ⓚ
Ambient temperature	-30…+85 °C		

Types and data – selection table

Type	Connection	Output	Switching distance	Housing material	Dimensions	w	d
BI8U-M18-AP6X	2 m cable	, PNP	8 mm,	CuZn-Cr	Ø 18 x 54 mm	w001	d047
BI8U-EM18-AP6X-H1141	male, M12 x 1	, PNP	8 mm,	V2A (1.4301)	Ø 18 x 52 mm	w002	d048
BI8U-M18-AP6X-H1141	male, M12 x 1	, PNP	8 mm,	CuZn-Cr	Ø 18 x 52 mm	w002	d048
BI8U-M18E-AP6X-H1141	male, M12 x 1	, PNP	8 mm,	CuZn-Cr	Ø 18 x 72 mm	w002	d049
BI8U-M18-RP6X-H1141	male, M12 x 1	, PNP	8 mm,	CuZn-Cr	Ø 18 x 52 mm	w008	d048
NI15U-M18-AP6X	2 m cable	, PNP	15 mm,	CuZn-Cr	Ø 18 x 54 mm	w001	d050
NI15U-EM18-AP6X-H1141	male, M12 x 1	, PNP	15 mm,	V2A (1.4301)	Ø 18 x 52 mm	w002	d051
NI15U-M18-AP6X-H1141	male, M12 x 1	, PNP	15 mm,	CuZn-Cr	Ø 18 x 52 mm	w002	d051
NI15U-M18-RP6X-H1141	male, M12 x 1	, PNP	15 mm,	CuZn-Cr	Ø 18 x 52 mm	w008	d051

Many different types available, also as NPN version, see type code

M18 – 4-wire DC

General data

Operating voltage	10…55 VDC	**Output**	, PNP
Housing material	CuZn-Cr	**Operating current [mA]**	200, Ⓚ
Ambient temperature	-30…+85 °C		

Types and data – selection table

Type	Connection	Switching distance	Dimensions	w	d
BI8U-M18M-VP44X	2 m cable	8 mm,	Ø 18 x 64 mm	w010	d043
BI8U-M18M-VP44X-H1141	male, M12 x 1	8 mm,	Ø 18 x 61.5 mm	w011	d044
NI15U-M18M-VP44X	2 m cable	15 mm,	Ø 18 x 64 mm	w010	d045
NI15U-M18M-VP44X-H1141	male, M12 x 1	15 mm,	Ø 18 x 61.5 mm	w011	d046

Many different types available, also as NPN version, see type code

M30 – 2-wire DC

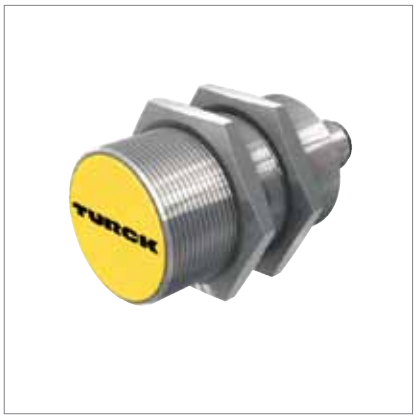

General data

Operating voltage	10…65 VDC	**Output**	⎯⎺⎽, 2-wire
Housing material	CuZn-Cr	**Operating current [mA]**	100, Ⓚ
Ambient temperature	-25…+70 °C		

Types and data – selection table

Type	Connection	Switching distance	Dimensions	w	d
BI10U-M30-AD4X	2 m cable	10 mm,	Ø 30 x 64 mm	w009	d052
BI10U-M30-AD4X-H1144	male, M12 x 1	10 mm,	Ø 30 x 62 mm	w004	d053
NI15U-M30-AD4X	2 m cable	15 mm,	Ø 30 x 64 mm	w009	d054
NI15U-M30-AD4X-H1144	male, M12 x 1	15 mm,	Ø 30 x 62 mm	w004	d055

M30 – 3-wire DC

General data

Operating voltage	10…30 VDC	**Output**	⎯⎺⎽, PNP
Operating current [mA]	200, Ⓚ	**Ambient temperature**	-30…+85 °C

Types and data – selection table

Type	Connection	Switching distance	Housing material	Dimensions	w	d
BI15U-M30-AP6X	2 m cable	15 mm,	CuZn-Cr	Ø 30 x 64 mm	w001	d052
BI15U-EM30-AP6X-H1141	male, M12 x 1	15 mm,	V2A (1.4301)	Ø 30 x 62 mm	w002	d053
BI15U-M30-AP6X-H1141	male, M12 x 1	15 mm,	CuZn-Cr	Ø 30 x 62 mm	w002	d053
NI30U-M30-AP6X	2 m cable	30 mm,	CuZn-Cr	Ø 30 x 64 mm	w001	d054
NI30U-EM30-AP6X-H1141	male, M12 x 1	30 mm,	V2A (1.4301)	Ø 30 x 62 mm	w002	d055
NI30U-M30-AP6X-H1141	male, M12 x 1	30 mm,	CuZn-Cr	Ø 30 x 62 mm	w002	d055

Many different types available, also as NPN version, see type code

w Wiring diagrams on page 658 d Dimension drawing on page 670 Accessories on page 560

M30 – 4-wire DC

General data

Operating voltage	10…55 VDC	**Output**	, PNP
Housing material	CuZn-Cr	**Operating current [mA]**	200, Ⓚ
Ambient temperature	-30…+85 °C		

Types and data – selection table

Type	Connection	Switching distance	Dimensions	w	d
BI15U-M30-VP44X	2 m cable	15 mm,	Ø 30 x 64 mm	w010	d052
BI15U-M30-VP44X-H1141	male, M12 x 1	15 mm,	Ø 30 x 62 mm	w011	d053
NI30U-M30-VP44X	2 m cable	30 mm,	Ø 30 x 64 mm	w010	d054
NI30U-M30-VP44X-H1141	male, M12 x 1	30 mm,	Ø 30 x 62 mm	w011	d055

Many different types available, also as NPN version, see type code

Hans Turck GmbH & Co. KG ▪ Tel. +49 208 49 52-0 ▪ Fax +49 208 49 52-264

Wiring diagrams on page 658 Dimension drawing on page 670 Accessories on page 560

uprox®+ PTFE-coated sensors for the automotive industry

Harsh production environments of the automotive industry require *uprox*®+ sensors in PTFE-coated threaded barrels. The PTFE coating protects efficiently against weld splatter and drill cuttings. The non-ferrous coil system make the sensors resistant to strong magnetic fields.

Features

- PTFE coating
- High magnetic field immunity
- Excellent EMC properties
- Factor 1 for all metals
- Highest switching distance

Properties

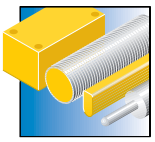

Designs
Threaded barrel versions M8 x 1, M12 x 1, M18 x 1 and M30 x 1.5

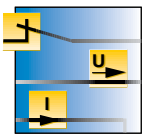

Electrical version
2/3-wire NO contact, PNP and NPN

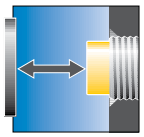

Switching distances
From 2 mm flush to 30 mm non-flush, on all metals

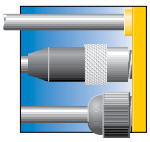

Electrical connections
Male M12 x 1, or cable with male end M12 x 1

Materials
TF80i coating protects against weld splatter or drill cuttings

Special features
Protection class IP68; approved for almost all automotive plants

Internet link
Scan the QR code to access our products on the internet

Hans Turck GmbH & Co. KG ▪ Tel. +49 208 49 52-0 ▪ Fax +49 208 49 52-264

EG08

General data

Connection	male, M12 x 1	**Operating voltage**	10…30 VDC
Output	⎯⎺⎯, PNP	**Housing material**	V2A (1.4301)-T
Operating current [mA]	150, Ⓚ	**Dimensions**	Ø 8 x 57 mm

Types and data – selection table

Type	Switching distance	Ambient temperature	w	d
BI2U-EGT08-AP6X-H1341	2 mm,	-30…+85 °C	w002	d027
NI6U-EGT08-AP6X-H1341	6 mm,	-25…+70 °C	w002	d056

M12 – 2-wire DC

General data

Connection	0.3 m Cable with connector, M12 x 1	**Operating voltage**	10…65 VDC
Output	⎯⎺⎯, 2-wire	**Switching distance**	2 mm,
Housing material	CuZn-T	**Operating current [mA]**	100, Ⓚ
Ambient temperature	0…+70 °C	**Dimensions**	Ø 12 x 64 mm

Types and data – selection table

Type	w	d
BI2U-MT12E-AD4X-0,3-RS4.23/XOR	w004	d057

w Wiring diagrams on page 658 d Dimension drawing on page 670 Accessories on page 560

M12 – 3-wire DC

General data

Connection	male, M12 x 1	**Operating voltage**	10…30 VDC
Output	⎯⎺⎯, PNP	**Housing material**	CuZn-T
Operating current [mA]	200, Ⓚ	**Ambient temperature**	-30…+85 °C
Dimensions	Ø 12 x 52 mm		

Types and data – selection table

Type	Switching distance	w	d
BI4U-MT12-AP6X-H1141	4 mm,	w002	d058
NI10U-MT12-AP6X-H1141	10 mm,	w002	d059

Many different types available, also as NPN version, see type code

M18 – 2-wire DC

General data

Operating voltage	10…65 VDC	**Output**	⎯⎺⎯, 2-wire
Housing material	CuZn-T	**Operating current [mA]**	100, Ⓚ
Ambient temperature	-25…+70 °C		

Types and data – selection table

Type	Connection	Switching distance	Dimensions	w	d
BI5U-MT18M-AD4X-H1144	male, M12 x 1	5 mm,	Ø 18 x 61.5 mm	w004	d044
BI5U-MT18M-AD4X-0,3-RS4.23/XOR	0.3 m Cable with connector, M12 x 1	5 mm,	Ø 18 x 64 mm	w004	d060
NI10U-MT18M-AD4X-H1144	male, M12 x 1	10 mm,	Ø 18 x 61.5 mm	w004	d061

M18 – 3-wire DC

General data

Connection	male, M12 x 1	**Operating voltage**	10…30 VDC
Output	⎯⎺⎯, PNP	**Housing material**	CuZn-T
Operating current [mA]	200, Ⓚ	**Ambient temperature**	-30…+85 °C
Dimensions	Ø 18 x 52 mm		

Types and data – selection table

Type	Switching distance	w	d
BI8U-MT18-AP6X-H1141	8 mm,	w002	d062
NI15U-MT18-AP6X-H1141	15 mm,	w002	d063

Many different types available, also as NPN version, see type code

M30 – 2-wire DC

General data

Operating voltage	10…65 VDC	**Output**	⎯⎺⎯, 2-wire
Housing material	CuZn-T	**Operating current [mA]**	100, Ⓚ
Ambient temperature	-25…+70 °C		

Types and data – selection table

Type	Connection	Switching distance	Dimensions	w	d
BI10U-MT30-AD4X-H1144	male, M12 x 1	10 mm,	Ø 30 x 62 mm	w004	d064
BI10U-MT30-AD4X-0,3-RS4.23/XOR	0.3 m Cable with connector, M12 x 1	10 mm,	Ø 30 x 64 mm	w004	d065
NI15U-MT30-AD4X-H1144	male, M12 x 1	15 mm,	Ø 30 x 62 mm	w004	d066

w Wiring diagrams on page 658 d Dimension drawing on page 670 Accessories on page 560

M30 – 3-wire DC

General data

Connection	male, M12 x 1	**Operating voltage**	10…30 VDC
Output	⎯⎺⎺⎯, PNP	**Housing material**	CuZn-T
Operating current [mA]	200, Ⓚ	**Ambient temperature**	-30…+85 °C
Dimensions	Ø 30 x 62 mm		

Types and data – selection table

Type	Switching distance	w	d
BI15U-MT30-AP6X-H1141	15 mm,	w002	d064
NI30U-MT30-AP6X-H1141	30 mm,	w002	d066

Many different types available, also as NPN version, see type code

Wiring diagrams on page 658 Dimension drawing on page 670 Accessories on page 560

uprox®+ For the food industry

The *uprox*®+ sensors for the food industry feature a rugged V4A stainless steel housing with laser-engraved type label and resist temperatures of -40 °C to +100 °C easily. A special double lip seal prevents the ingress of liquids. The materials used are resistant to detergents and disinfectants. The fluid-tight housing and the excellent EMC properties of the electronics ensure failsafe operation in harsh industrial production environments.

Features

- High tightness and resistance
- Factor 1, all metals
- Rugged stainless steel housing
- High protection classes IP68 and IP69K
- Highest switching distance

Properties

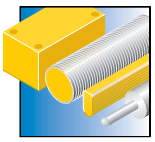

Designs
Threaded barrel M12 x 1, M18 x 1 and M30 x 1.5

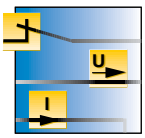

Electrical versions
3-wire NO contact, PNP and NPN

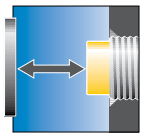

Switching distances
From 4 mm flush to 30 mm non-flush, on all metals

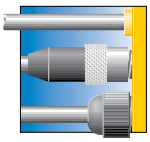

Electrical connections
2 m cable, male M12 x 1 or terminal chamber

Materials
Rugged V4A stainless steel housing, Chemical-resistant LCP front cap, sealed PP connector insert

Special features
High protection classes IP68 and IP69K, laser-engraved type code; Ecolab certificate

Internet link
Scan the QR code to access our products on the internet

Hans Turck GmbH & Co. KG ▪ Tel. +49 208 49 52-0 ▪ Fax +49 208 49 52-264

M12

General data

Operating voltage	10…30 VDC	**Output**	_\‾, PNP
Housing material	V4A (1.4404)	**Operating current [mA]**	200, Ⓚ
Ambient temperature	-40…+100 °C		

Pressure-resistant up to 20 bar

Types and data – selection table

Type	Connection	Switching distance	Dimensions	w	d
BI4U-EM12WDTC-AP6X	Terminal chamber, Removable cage clamp terminals	4 mm,	Ø 12 x 80 mm	w006	d067
BI4U-EM12WD-AP6X	2 m cable	4 mm,	Ø 12 x 52 mm	w001	d068
BI4U-EM12WD-AP6X-H1141	male, M12 x 1	4 mm,	Ø 12 x 52 mm	w002	d037
NI10U-EM12WDTC-AP6X	Terminal chamber, Removable cage clamp terminals	10 mm,	Ø 12 x 80 mm	w006	d069
NI10U-EM12WD-AP6X	2 m cable	10 mm,	Ø 12 x 52 mm	w001	d070
NI10U-EM12WD-AP6X-H1141	male, M12 x 1	10 mm,	Ø 12 x 52 mm	w002	d071

Many different types available, also as NPN version, see type code

M18

General data

Operating voltage	10…30 VDC	**Output**	_\‾, PNP
Housing material	V4A (1.4404)	**Operating current [mA]**	200, Ⓚ
Ambient temperature	-40…+100 °C		

Pressure-resistant up to 15 bar

Types and data – selection table

Type	Connection	Switching distance	Dimensions	w	d
BI8U-EM18WDTC-AP6X	Terminal chamber, Removable cage clamp terminals	8 mm,	Ø 18 x 81 mm	w006	d072
BI8U-EM18WD-AP6X	2 m cable	8 mm,	Ø 18 x 52 mm	w001	d073
BI8U-EM18WD-AP6X-H1141	male, M12 x 1, M12 push-pull compatible	8 mm,	Ø 18 x 52 mm	w002	d048
NI15U-EM18WDTC-AP6X	Terminal chamber, Removable cage clamp terminals	15 mm,	Ø 18 x 81 mm	w006	d074
NI15U-EM18WD-AP6X	2 m cable	15 mm,	Ø 18 x 52 mm	w001	d075
NI15U-EM18WD-AP6X-H1141	male, M12 x 1, M12 push-pull compatible	15 mm,	Ø 18 x 52 mm	w002	d076

Many different types available, also as NPN version, see type code

w Wiring diagrams on page 658 d Dimension drawing on page 670 Accessories on page 560

M30

General data

Operating voltage	10…30 VDC	**Output**	⎯⎺⎺⎯, PNP
Housing material	V4A (1.4404)	**Operating current [mA]**	200, Ⓚ
Ambient temperature	-40…+100 °C		

Pressure-resistant up to 10 bar

Types and data – selection table

Type	Connection	Switching distance	Dimensions	w	d
BI15U-EM30WDTC-AP6X	Terminal chamber, Removable cage clamp terminals	15 mm,	Ø 30 x 95 mm	w006	d077
BI15U-EM30WD-AP6X	2 m cable	15 mm,	Ø 30 x 66 mm	w001	d078
BI15U-EM30WD-AP6X-H1141	male, M12 x 1	15 mm,	Ø 30 x 62 mm	w002	d053
NI30U-EM30WDTC-AP6X	Terminal chamber, Removable cage clamp terminals	30 mm,	Ø 30 x 95 mm	w006	d079
NI30U-EM30WD-AP6X	2 m cable	30 mm,	Ø 30 x 66 mm	w001	d080
NI30U-EM30WD-AP6X-H1141	male, M12 x 1	30 mm,	Ø 30 x 62 mm	w002	d081

Many different types available, also as NPN version, see type code

Wiring diagrams on page 658 Dimension drawing on page 670 Accessories on page 560

Inductive sensors

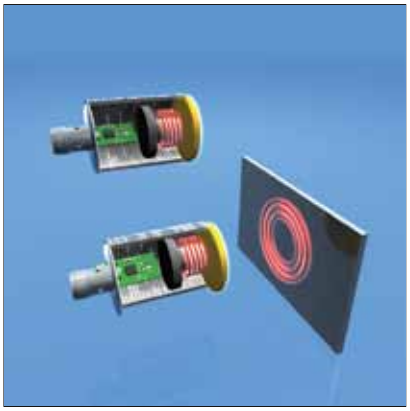

Inductive Sensors – The full range

Inductive sensors are designed for contactless and wear-free detection of metal targets. They are extremely resistant to environmental influences, very reliable, feature high switching frequencies and are durable.
There are as many application possibilities as sensor types: The sensors detect motion states at machines, open/close position of grippers and pincers or are applied for parts inspection.
The entire program of inductive sensors comprises factor 1 sensors *uprox*® and *uprox*®+ as well as versions with conventional ferrite core technology. Nearly all types are flush as well as non-flush mountable. Moreover, the product portfolio offers very flexible non-flush mountable sensors for recessed or flush mounting.
Only extremely resistant housing materials are used. In order to comply with environmental conditions of individual applications, we provide them in diverse material qualities. We offer of course all standard connection technologies and electrical output types.
Special applications often require special sensors. Most requirements are fulfilled as a standard by *uprox*®+ sensors, such as Factor 1, magnetic field immunity, protection rating IP68/IP69K and many more. You find the sensors with functional descriptions for all applications in the TURCK product portfolio:

- Ring sensors
- Slot sensors
- Dual sensors for valve control
- Analog inductive sensors
- Inductive sensors for underwater applications
- Pressure-resistant inductive sensors
- Selective inductive sensors
- and many more

Our strengths – Your advantages

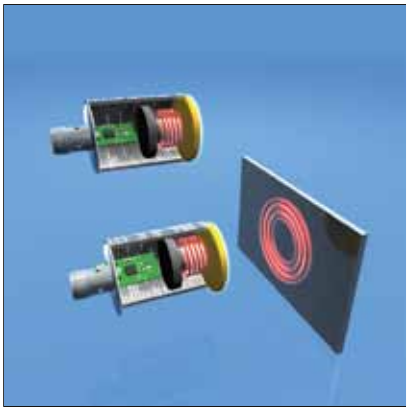

Wear-free operation

Inductive proximity switches are designed for wear-free and contactless detection of metal objects. For this purpose they use a high-frequency electromagnetic AC field that interacts with the target. Conventional inductive sensors generate the AC field via an LC resonant circuit with a ferrite core coil. Eddy currents are induced in the metal target. They withdraw energy from the field which in turn leads to a decrease of the oscillating amplitude. The decrease is detected and analysed by the inductive sensor. For more details on inductive sensors see chapter „*uprox*®+ inductive factor 1 sensors“

Extensive product range

TURCK customers can choose from a broad range of standard products. The entire range of sensors and accessories holds the perfect solution for your individual application and meets increasing requirements in the long term. Nearly all types are flush as well as non-flush mountable. The product portfolio also includes very flexible non-flush mountable sensors that can also be partially or even fully installed. The devices are available as standard products ex stock.

Inductive sensors for special applications

Special applications often require special sensors. Most requirements are fulfilled as a standard by *uprox*®+ sensors, such as Factor 1, magnetic field immunity, protection classes IP68/IP69K and many more. You find the sensors and functional descriptions for all applications in the TURCK product portfolio: Ring, slot, dual sensors for valve control, sensors with analog output, with extended temperature range, for underwater use, pressure resistant inductive sensors and sensors with selective properties.

Hans Turck GmbH & Co. KG ▪ Tel. +49 208 49 52-0 ▪ Fax +49 208 49 52-264

Your advantages

Many different designs

Many designs are available and each is optimally adjusted to different application conditions. From the compact rectangular version 5 x 5 x 25 mm to the 90 x 130 x 60 mm version with extremely large switching distance. Also available are sensor sizes ranging from M4 to PG36 threaded barrels as well as Ø 3 mm to Ø 40 mm smooth barrels. Nearly all types are flush as well as non-flush mountable. The product portfolio also includes very flexible non-flush mountable sensors that can also be partially or even fully installed.

Application compliant housing materials

Only extremely resistant housing materials are used. In order to comply with the ambient conditions of individual applications, our sensors are incorporated in different housing materials: Plastic versions PA, PP, PBT or ABS, brass (threaded barrel), chrome-plated or PTFE-coated, stainless steel in different qualities up to high-quality V4A, 1.4404.

Many different output and connection possibilities

We offer all connection types available on the market: Ø 8 mm, M8, M12, 1/2" and 7/8" connectors, cables in different lengths and sheath qualities (standard length 2 m) pigtail - i.e. short cable with male end M8 or M12, terminal chamber - incl. the new innovative TC version with removable terminal block and variable cable outlet. All standard electrical versions are available: NAMUR, 2, 3 and 4-wire DC, PNP/NPN output or 2-wire AC/DC. Also available are fieldbus capable dual sensors for DeviceNet™ or AS-interface®.

For special applications

Ring sensors

TURCK ring sensors with integrated electronics are very compact and thus fit in many places. They are used in many different systems such as in assembly lines or component feeding systems where they detect small, fast moving metal parts reliably and quickly. The *uprox*®+ sensors of theTS12 series are an innovative replacement for various ring sensors. You only need one sensor type to operate applications with different tube diameters.

Page 102

Slot sensors

The slot sensors are U-shaped and the active face is located between the two arms. If an object passes through the slot, the sensor is actuated. Slot sensors detect laterally approaching targets regardless of their distance to the active face.

Page 108

Dual sensors for rotary actuators

In the chemical, petro-chemical and food industry, position control on rotary actuators is of major importance. TURCK dual sensors detect the end position of rotary actuators reliably. They are easily mounted and wired, thus making them a cost-efficient solution for your systems.

Page 112

Hans Turck GmbH & Co. KG ▪ Tel. +49 208 49 52-0 ▪ Fax +49 208 49 52-264

Sensors with analog output

Inductive sensors with analog output accomplish simple control tasks. They provide a current, voltage or frequency signal that is proportional to the target's distance. TURCK analog sensors provide a linear output signal across the entire measuring range.

Page 116

Extended temperature range

The product portfolio even includes sensors for applications with ambient temperatures of -60 °C or +250 °C. These TURCK sensors are typically used in deep freezing systems, outdoors, in metal foundries, in drying furnaces of varnishing stations or the glass industry for example.

Page 128

Inductive sensors for underwater applications

TURCK offers sensors in fully pressure and seawater tight housings for subsea applications. They are made for continuous use under water. Mounted in plastic M18 threaded barrels, they can even be used at water depths of up to 500 m. Also included in the TURCK product portfolio are CP40 sensors. They are fully encapsulated in the SG40/2 housing. In addition, they feature large switching distances, are IP68 rated and are made for water depths of up to 500 m. They are mainly used in locks, weirs and offshore areas.

Page 146

For special applications

Pressure-resistant sensors

We offer application optimized, pressure resistant as well as high-pressure resistant devices. The *uprox*®+ Washdown sensors resist pressures up to 20 bar. They combined the unique *uprox* ® advantages in a single product, such as largest switching distance for example, factor 1 and protection rating IP68/IP69K. The high-pressure resistant sensors are incorporated in a stainless steel housing and are ideally suited for hydraulic systems. Special seals and additional outer seals at the front as well as an O-ring enable application in high pressure systems of up to 500 bar.

Page 148

Selective sensors

TURCK's sensor series NF, FE and NF/FE with distinctive function are particularly suited for applications in which ferritic metals have to be distinguished from non-ferritic ones. They distinguish between workpiece and tool or between workpieces made of different materials and accomplish simple coding tasks.

Page 152

Hans Turck GmbH & Co. KG ▪ Tel. +49 208 49 52-0 ▪ Fax +49 208 49 52-264

Type code

B	i	.	4	U	–	M12	.	–	A	P	6	X	–	H1	1	4	1	/	L100

B	i	.	4	U	Functional principle	–	M12	.	Design	–	A	P	6	X	Electrical version	–

Special functions

FE	selective behavi-our: ferrite only
U	*uprox*® or *uprox*®+ factor 1 sensors
NF	selective behavi-our: non-ferrite only
R	ring sensor

Rated operating distance

…	or slot width ring diameter [mm]

Options

D	high-pressure resistant

Functional principle

i	inductive

Fitting

B	flush
N	non-flush
S	slot sensor

Additional information

D	climate-proof
E	long-sized housing
K	short-sized housing
M	medium-sized housing
S	lateral active face
SK	terminal chamber, angled cable outlet
SR, TC	terminal chamber with straight/angled cable outlet
WD	wash down resistant to aggressive cleaning agents, Protection class IP68/69K

Housing

CA25	rectangular, 25 x 25 flexible active face
CA40, CK40, CP40, QV40	rectangular, 40 x 40, flexible active face
CP80	rectangular, 80 x 80
DSC, DSU	dual sensor for moni-toring of rotary actua-tors height in mm
EG, EM	threaded barrel, stain-less steel, Ø in [mm]
EGT, GT, MT	threaded barrel, metal PTFE-coated, Ø in [mm]
EH, H	smooth barrel, metal, Ø in [mm]
GS	threaded barrel, metal, lateral active face, Ø in [mm]
G, M	threaded barrel, metal, Ø in [mm]
HS	smooth barrel, metal, lateral active face, Ø in [mm]
K	smooth barrel, plastic, or slot-shaped
P, S	threaded barrel, plastic Ø in [mm], housing style 'S' also available as ring sensor BI/NI…R
Q, QN, QP	rectangular, height in mm
TS	tube sensor detection of small parts, height in mm
W	ring sensor, height in mm

Indication

X	LED
X…	number of LEDs or multicolor LED

Voltage range

3	10…300 VDC / 20…250 VAC
4	10…65 VDC, Ⓚ
6	10…30 VDC, Ⓚ
7	10…30 VDC (TTL compatibel)
30	10…300 VDC / 20…250 VDC, Ⓚ
31	10…300 VDC / 20…250 VAC, Ⓚ max. 100 mA
41	10…55 VDC
44	10…55 VDC, Ⓚ
45	8.4…65 VDC, Ⓚ, load dump and EMC protec-ted acc. to e1 approval

Output mode

D	2-wire DC, non-polarized
G	2-wire DC, polarized
N	NPN
P	PNP
Z, DZ	2-wire AC/DC

Output function

A	working current NO
ASI	AS-Interface® connec-tion
DA	dynamic output, working current NO
Dnet	DeviceNet™
F	working current NO/ closed current NC, programmable via connection
LF	analog output (frequency)
LI	analog output (current)
LI-Exi	analog output (current), intrinsically save
LIU, SIU	analog output (voltage and current)
LU	analog output (current)
R	closed current NC
Y0, Y1	output acc. to EN 60947-5-6 (NAMUR)
V	changeover contact

H1 | 1 | 4 | 1 Electrical connection: connector / **L100** Special versions

Assignment

1	standard assignment or customized

Number of contacts

…	… contacts

Connector type

1	straight
3	straight, with adapter

Connector type

B1	connector type 7/8“
B3	connector type 1/2“
H1	connector type M12 x 1
V1, V2	connector type M8 x 1 / Ø 8 mm

Features

3G	approval ATEX II 3 G
3D	approval ATEX II 3 D
3GD	approval ATEX II 3 G and II 3 D
L100	device length 100 mm
L80	device length 80 mm
S34	magnetic-field resistant
S97	extended temperature range: -40 °C
S100	extended temperature range: +100 °C
S120	extended temperature range: +120 °C
S139	seawater-proof housing
S369	CP40 housing fully encapsulated in SG40 protective housing, seawater-proof
S907	extended temperature range: +160 °C
S929	extended temperature range: -60 °C
S1102	extended temperature range: +250 °C

x.x | PSG | 3 | M Pigtail: Cable connection with connector

Assignment

M	rotatable nut
S	fixed thread

… contacts

…	… contacts

Connector type

PSG	connector M8 x 1, straight
RS	connector M12 x 1, straight rotatable nut

Cable length

…	[m]

…M Cable connection

Cable connection

…M	cable length [m]

Designs and variants

	Design	Switching distance	Electrical connection	Output	Page
Q5SE	Rectangular Q5SE 5 x 5 x 25 mm	0.8 mm,	2 m cable	, PNP	63
Q5,5	Rectangular Q5,5 8 x 5.5 x 28 mm	2 mm, 3.5 mm,	2 m cable	, NPN , PNP	63
Q06	Rectangular Q06 17.3 x 6 x 27.8 mm	3 mm,	2 m cable	, NPN , PNP	64
Q6,5	Rectangular Q6,5 17 x 6.5 x 20 mm	1 mm, 2 mm,	2 m cable	, PNP	64
Q8SE	Rectangular Q8SE 8 x 8 x 40 mm	4 mm,	2 m cable connector, M8 x 1	, PNP , NPN	65
Q08	Rectangular Q08 20 x 8 x 32 mm	8 mm, 5 mm, 7 mm,	2 m cable connector, Ø8 mm connector, M8 x 1 0.5 m cable with connector, M12 x 1 1 m cable with connector, M12 x 1	, PNP , NPN , PNP , NPN NAMUR Analog output, 0...20 mA, 0...10 V	119
QP08	Rectangular QP08 20 x 8 x 32 mm	10 mm,	2 m cable 0.3 m cable with connector, M8 x 1	, NPN , PNP	66

Hans Turck GmbH & Co. KG ▪ Tel. +49 208 49 52-0 ▪ Fax +49 208 49 52-264

	Design	Switching distance	Electrical connection	Output	Page
Q9,5	Rectangular Q9,5 17 x 9.5 x 20 mm	2 mm,	2 m cable	, PNP	66
Q10	Rectangular Q10 25 x 10.8 x 42 mm	8 mm,	2 m cable connector, M8 x 1	, PNP , NPN	67
Q10S	Rectangular Q10S 16 x 10.2 x 27.8 mm	2 mm, 5 mm,	2 m cable 0.2 m connector, M8 x 1 0.3 m cable with connector, M8 x 1	NAMUR , NPN , PNP , NPN , PNP	67
Q12	Rectangular Q12 26 x 12 x 40 mm	5 mm, 2 mm, 4 mm,	2 m cable 7 m cable connector, M8 x 1 connector, M12 x 1	, PNP , NPN , PNP , NPN	68
Q18	Rectangular Q18 18 x 18 x 29 mm	5 mm,	2 m cable	, PNP , NPN	69
Q20	Rectangular Q20 ring sensor Q20 40 x 20 x 68 mm	15 mm, 25 mm,	connector, M12 x 1 2 m cable	Analog output, 0...10 V , PNP , NPN NAMUR Analog output, 0...20 mA, 0...10 V	69, 104, 120
Q25	Rectangular Q25 25 x 25.5 x 38.5 mm	10 mm,	2 m cable	, NPN , PNP	70

Designs and variants

	Design	Switching distance	Electrical connection	Output	Page
CA25	Rectangular CA25 25 x 25 x 40 mm	10 mm, 15 mm,	connector, M8 x 1 connector, M12 x 1	, PNP	70
QN26	Rectangular QN26 26 x 26 x 43 mm	10 mm,	0.15 m cable with connector, M12 x 1	, 2-wire	71
CK40	Rectangular CK40 40 x 40 x 65 mm	15 mm, 20 mm, 20 mm, 25 mm, 30 mm, 35 mm, 40 mm, 50 mm,	connector, M12 x 1 connector, 7/8" connector, 1/2"	, NPN , PNP , NPN , PNP , 2-wire NAMUR Analog output, 0...20 mA, 0...10 V	71, 121
CP40	Rectangular CP40 40 x 40 x 114 mm 67 x 50 x 190 mm	15 mm, 20 mm, 20 mm, 30 mm, 35 mm, 40 mm, 50 mm,	terminal chamber connector, M12 x 1 30 m cable	, NPN , PNP , NPN , PNP , NAMUR , 2-wire Analog output, 0...20 mA, 0...10 V	72, 121, 130, 134, 147, 153
QV40	Rectangular QV40 40 x 40 x 65 mm	20 mm, 50 mm,	connector, M12 x 1	, PNP	73
Q42	Rectangular Q42 42.5 x 42.5 x 68 mm	50 mm,	connector, M12 x 1	, PNP	73
Q80	Rectangular Q80 80 x 40 x 92 mm	50 mm, 75 mm, 60 mm,	connector, M12 x 1 2 m cable	, NPN , PNP , NPN , PNP NAMUR Analog output, 0...20 mA, 0...10 V	74, 122

Hans Turck GmbH & Co. KG ▪ Tel. +49 208 49 52-0 ▪ Fax +49 208 49 52-264

	Design	Switching distance	Electrical connection	Output	Page
CP80	Rectangular CP80 80 x 41 x 80 mm	40 mm, 40 mm, 50 mm, 75 mm,	terminal chamber connector, M12 x 1	, NPN , PNP , NAMUR	75, 130, 134
K90	Rectangular K90SR 75 x 60 x 130 mm	100 mm, 60 mm, 50 mm,	connector, M12 x 1 terminal chamber	, PNP , NPN , NAMUR	75
Q130	Rectangular Q130 57 x 48 x 130 mm	30 mm,	2 m cable connector, 7/8"	, NPN , PNP 	76
M5	threaded barrel M5 x 0.5 Ø 5 x 30 mm Ø 5 x 42.5 mm	1 mm,	2 m cable connector, M8 x 1	NAMUR , PNP , NPN , PNP	79
M8	threaded barrel M8 x 1 Ø 8 x 23.6 mm Ø 8 x 47 mm Ø 8 x 49 mm Ø 8 x 57 mm Ø 8 x 31 mm Ø 8 x 23.6 mm Ø 8 x 41.6 mm Ø 8 x 57 mm Ø 8 x 39 mm Ø 8 x 42 mm	1.5 mm, 6 mm, 4 mm, 3 mm, 2 mm,	connector, M12 x 1 2 m cable	NAMUR , 2-wire , PNP , NPN , PNP , PNP , NPN Analog output, 0...10 V	79, 80, 81, 82, 135, 149

Designs and variants

	Design	Switching distance	Electrical connection	Output	Page
M12	threaded barrel M12 x 1 Ø 12 x 100 mm Ø 12 x 34 mm Ø 12 x 42 mm Ø 12 x 52 mm Ø 12 x 54 mm Ø 12 x 60 mm Ø 12 x 62 mm Ø 12 x 63 mm Ø 12 x 64 mm Ø 12 x 65 mm Ø 12 x 67 mm Ø 12 x 70 mm Ø 12 x 71 mm Ø 12 x 72 mm Ø 12 x 75 mm Ø 12 x 80 mm	2 mm, 2.5 mm, 3 mm, 4 mm, 4 mm, 5 mm, 8 mm, 10 mm,	2 m cable 7 m cable terminal chamber terminal chamber, removablee cage clamp terminals connector, M12 x 1 connector, M8 x 1 connector, 1/2"	NAMUR , 2-wire , PNP , NPN , PNP , PNP , NPN Analog output, 0...20 mA, 0...10 V	82, 83, 84, 85, 86, 123, 129, 132, 135, 136, 140, 149, 153
M18	threaded barrel M18 x 1 Ø 18 x 30 mm Ø 18 x 34 mm Ø 18 x 46 mm Ø 18 x 52 mm Ø 18 x 54 mm Ø 18 x 61.5 mm Ø 18 x 64 mm Ø 18 x 65 mm Ø 18 x 67 mm Ø 18 x 71 mm Ø 18 x 72 mm Ø 18 x 75 mm Ø 18 x 77 mm Ø 18 x 80 mm Ø 18 x 81 mm Ø 18 x 82 mm Ø 18 x 87 mm Ø 18 x 95 mm Ø 18 x 97 mm Ø 18 x 103 mm Ø 18 x 107.5 mm Ø 18 x 139 mm	5 mm, 7 mm, 7 mm, 8 mm, 8 mm, 10 mm, 12 mm, 14 mm, 15 mm,	2 m cable 7 m cable terminal chamber terminal chamber, removablee cage clamp terminals connector, M12 x 1 connector, 1/2" connector, 7/8"	NAMUR , 2-wire , PNP , NPN , PNP , NPN , PNP Analog output, 4...20 mA , PNP/Analog output, 0...10 V Analog output, 4...20 mA, 0...10 V	86, 87, 88, 89, 90, 123, 124, 125, 129, 132, 137, 138, 141, 142, 147, 150, 154

Hans Turck GmbH & Co. KG ▪ Tel. +49 208 49 52-0 ▪ Fax +49 208 49 52-264

	Design	Switching distance	Electrical connection	Output	Page
M30	threaded barrel M30 x 1.5 Ø 30 x 44 mm Ø 30 x 62 mm Ø 30 x 64 mm Ø 30 x 66 mm Ø 30 x 72 mm Ø 30 x 80 mm Ø 30 x 80 mm Ø 30 x 87 mm Ø 30 x 95 mm Ø 30 x 97 mm Ø 30 x 100 mm Ø 30 x 110 mm Ø 30 x 115 mm	10 mm, 12 mm, 15 mm, 15 mm, 20 mm, 20 mm, 30 mm,	2 m cable 7 m cable terminal chamber terminal chamber, removablee cage clamp terminals connector, M12 x 1 connector, 1/2" connector, 7/8"	NAMUR , 2-wire , PNP , NPN , PNP , NPN , PNP ,	90, 91, 92, 93, 94, 125, 126, 132, 132, 138, 139, 141, 142, 151, 154
G47	threaded barrel G47 Ø 47 x 96 mm Ø 47 x 70 mm Ø 47 x 106 mm	25 mm, 20 mm, 40 mm, 25 mm,	terminal chamber 2 m cable	, PNP , NPN , NAMUR , PNP , NPN	94
Ø 3 mm	smooth barrel 3 mm Ø 3 x 27 mm	1 mm,	2 m cable	, PNP , NPN	97
Ø 4 mm	smooth barrel 4 mm Ø 4 x 30 mm Ø 4 x 42.5 mm	1 mm,	2 m cable connector, M8 x 1 0.3 m connector, M12 x 1	NAMUR , PNP , NPN , PNP Analog output, 0...20 mA, 0...10 V	97, 127
Ø 6,5 mm 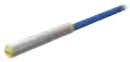	smooth barrel 6.5 mm Ø 6.5 x 23.6 mm Ø 6.5 x 31 mm Ø 6.5 x 32 mm Ø 6.5 x 42 mm Ø 6.5 x 49 mm	1.5 mm, 2 mm, 3 mm, 6 mm,	2 m cable connector, M8 x 1	NAMUR , PNP , NPN , PNP Analog output, 0...10 V	98, 127
Ø 11 mm	smooth barrel 11 mm Ø 11 x 34 mm Ø 11 x 54 mm Ø 11 x 75 mm	2 mm, 5 mm,	2 m cable terminal chamber	NAMUR , PNP	99

Designs and variants

	Design	Switching distance	Electrical connection	Output	Page
Ø 20 mm	smooth barrel 20 mm Ø 20 x 54 mm Ø 20 x 77 mm Ø 20 x 79 mm	10 mm,	2 m cable terminal chamber	, PNP , NPN 	100
Ø 34 mm	smooth barrel 34 mm Ø 34 x 80 mm Ø 34 x 106 mm	20 mm,	2 m cable terminal chamber	, PNP	100
Ø 40 mm	smooth barrel 40 mm Ø 40 x 90 mm	30 mm, 20 mm,	terminal chamber	, PNP , NPN ,	101
TS12	Rectangular TS12 17 x 12 x 80 mm	20 mm,	connector, M8 x 1	, PNP , NPN	103
Q14 – Switching output	ring sensor Q14 30 x 14 x 62.5 mm	–	connector, M12 x 1	, PNP , NPN Analog output, 0...10 V	103, 104
W30	ring sensor W30 35 x 30 x 60 mm	–	connector, M12 x 1	, PNP , NPN	105
Q80	ring sensor Q80 80 x 40 x 92 mm		connector, M12 x 1	, PNP Analog output, 0...10 V	105, 118

Hans Turck GmbH & Co. KG ▪ Tel. +49 208 49 52-0 ▪ Fax +49 208 49 52-264

	Design	Switching distance	Electrical connection	Output	Page
S32SR	ring sensor S32SR 100 x 32 x 175 mm	–	terminal chamber	, PNP	106
S32XL	ring sensor S32XL 137.5 x 32 x 180 mm	–	connector, M12 x 1	, PNP Analog output, 0...10 V	106, 118
K08	slot sensor K08 15 x 8 x 11 mm	–	0.5 m cable	NAMUR , PNP , NPN	109
K09	slot sensor K09 9 x 14 x 20 mm	–	0.5 m cable	NAMUR	109
K10	slot sensor K10 15 x 10 x 19 mm	–	0.5 m cable	NAMUR , PNP	110
K30	slot sensor K30 60 x 30 x 48 mm	–	2 m cable	NAMUR , PNP , NPN	110
DSC26	dual sensor for valve monitoring DSC26 42 x 26 x 28 mm	4 mm,	2 m cable connector, M12 x 1	NAMUR , PNP	113
DSU35	dual sensor for valve monitoring DSU35 60 x 35 x 59 mm 60 x 35.4 x 59 mm 60 x 35 x 62 mm	4 mm,	2 m cable connector, M12 x 1 terminal chamber	NAMUR , PNP , 2-wire 2x , AS-i V2.1 , DeviceNet	113

Designs and variants

	Design	Switching distance	Electrical connection	Output	Page
EH6.5 – 2 outputs 0...10 V – Distinction of ferrous metals 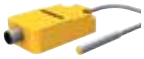	smooth barrel 6.5 mm Ø 6.5 x 41.6 mm		0.2 m connector, M12 x 1	Analog output, 0...10 V	117
Q14 – outputs 0...10 V und 0...20 mA	Rectangular Q14 30 x 14 x 52 mm ring sensor Q14	10 mm, 20 mm,	connector, M8 x 1 2 m cable	Analog output, 0...20 mA, 0...10 V , PNP , NPN NAMUR Analog output, 0...10 V	119, 120
+120 °C – Ø160 mm	Rectangular Q160 60 x 160 mm	100 mm,	2 m cable	, PNP	140
+250 °C – Q40 – Sensor	Rectangular CQ40 40 x 40 x 52 mm	25 mm,	5 m connector, M12 x 1	, PNP	143
+250 °C – Q80 – Sensor	Rectangular CQ80 80 x 41 x 92 mm	40 mm,	5 m connector, M12 x 1	, PNP	143
+250 °C – EM30 – Amplifier	threaded barrel M30 x 1.5 Ø 30 x 83 mm	–	connector, M12 x 1	, PNP	144

Hans Turck GmbH & Co. KG ▪ Tel. +49 208 49 52-0 ▪ Fax +49 208 49 52-264

Rectangular designs

Rectangular inductive sensors fit to measure. Thanks to large switching distances and rugged housing materials, these sensors are highly reliable and secure. They are quickly and firmly mounted thanks to threaded holes in the housing. All standard electrical output and connection types are available.

Features

- Stable and resistant plastic housings
- Large switching distances
- Perfect mounting
- All connection types

Properties

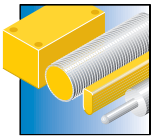

Designs
From the small compact Q5SE to the big sized K90 Ø 90 mm version

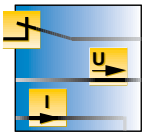

Electrical versions
NAMUR, 2, 3 and 4-wire DC, 2-wire AC/DC

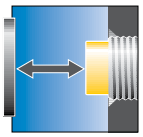

Switching distances
0.8 mm for exact position detection, 100 mm for long ranges

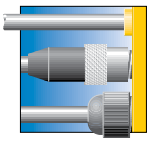

Electrical connections
Cable, connector, terminal chamber and pigtail

Materials
Rugged and chemical-resistant plastic and metal housings for all types of applications

Special features
Factor 1, extended temperature range, approvals (et al. ATEX and SIL)

Internet link
Scan the QR code to access our products on the internet

Hans Turck GmbH & Co. KG ▪ Tel. +49 208 49 52-0 ▪ Fax +49 208 49 52-264

Q5SE

General data

Connection	2 m cable	**Operating voltage**	10…30 VDC
Output	__, PNP	**Switching distance**	0.8 mm,
Housing material	Al, anodized	**Dimensions**	5 x 5 x 25 mm

Active face on top

Types and data – selection table

Type	w	d
BI0,8-Q5SE-AP6X	w012	d082

Q5.5

General data

Connection	2 m cable	**Operating voltage**	10…30 VDC
Output	__, PNP	**Housing material**	PP-GF20
Dimensions	8 x 5.5 x 28 mm		

Types and data – selection table

Type	Switching distance	w	d
BI2-Q5,5-AP6X	2 mm,	w012	d083
NI3,5-Q5,5-AP6X	3.5 mm,	w012	d083

Many different types available, also as NPN version, see type code

w Wiring diagrams on page 658 d Dimension drawing on page 670 Accessories on page 560

Q06

General data

Connection	2 m cable	**Operating voltage**	10…30 VDC
Output	_\‾_, PNP	**Switching distance**	3 mm,
Housing material	PBT	**Dimensions**	17.3 x 6 x 27.8 mm

Types and data – selection table

Type	w	d
BI3-Q06-AP6X2	w012	d084

Many different types available, also as NPN version, see type code

Q6.5

General data

Connection	2 m cable	**Operating voltage**	10…30 VDC
Output	_\‾_, PNP	**Housing material**	PP
Dimensions	17 x 6.5 x 20 mm		

Types and data – selection table

Type	Switching distance	w	d
BI1-Q6,5-AP6/S34	1 mm,	w012	d085
NI2-Q6,5-AP6/S34	2 mm,	w012	d085

Q8SE

General data

Operating voltage	10…30 VDC	**Output**	, PNP
Switching distance	4 mm,	**Housing material**	PP
Dimensions	8 x 8 x 40 mm		

Lateral active face

Types and data – selection table

Type	Connection	w	d
NI4U-Q8SE-AP6X	2 m cable	w012	d086
NI4U-Q8SE-AP6X-V1131	male, M8 x 1	w013	d087

Many different types available, also as NPN version, see type code

Q08

General data

Housing material	GD-Zn	**Dimensions**	20 x 8 x 32 mm

Types and data – selection table

Type	Connection	Operating voltage	Output	Switching distance	w	d
BI8U-Q08-AP6X2	2 m cable	10…30 VDC	, PNP	8 mm,	w012	d088
BI8U-Q08-AP6X2-V1131	male, Ø 8 mm	10…30 VDC	, PNP	8 mm,	w013	d089
BI5U-Q08-AP6X2	2 m cable	10…30 VDC	, PNP	5 mm,	w012	d090
BI5U-Q08-AP6X2-V1131	male, Ø 8 mm	10…30 VDC	, PNP	5 mm,	w013	d091
BI5U-Q08-AP6X2-V2131	male, M8 x 1	10…30 VDC	, PNP	5 mm,	w013	d092
BI5U-Q08-AP6X2-0,5XOR-RS4	0.5 m Cable with connector, M12 x 1	10…30 VDC	, PNP	5 mm,	w013	d093
BI5U-Q08-AP6X2-1XOR-RS4	1 m Cable with connector, M12 x 1	10…30 VDC	, PNP	5 mm,	w013	d093
BI7-Q08-VP6X2	2 m cable	10…30 VDC	, PNP	7 mm,	w010	d090
BI7-Q08-VP6X2-V1141	male, Ø 8 mm	10…30 VDC	, PNP	7 mm,	w005	d091
BI5-Q08-Y1X	2 m cable	8.2 VDC	NAMUR	5 mm,	w014	d090
BI5-Q08-VP6X2	2 m cable	10…30 VDC	, PNP	5 mm,	w010	d090

Many different types available, also as NPN version, see type code

w Wiring diagrams on page 658 d Dimension drawing on page 670 Accessories on page 560

QP08

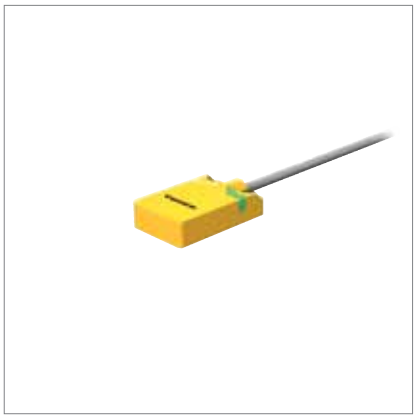

General data

Operating voltage	10…30 VDC	**Output**	_\‾_, PNP
Switching distance	10 mm,	**Housing material**	PP
Dimensions	20 x 8 x 32 mm		

Types and data – selection table

Type	Connection	w	d
NI10U-QP08-AP6X2	2 m cable	w012	d094
NI10U-QP08-AP6X2-0,3-PSG3M	0.3 m Cable with connector, M8 x 1	w013	d095

Many different types available, also as NPN version, see type code

Q9.5

General data

Connection	2 m cable	**Operating voltage**	10…30 VDC
Output	_\‾_, PNP	**Switching distance**	2 mm,
Housing material	PP	**Dimensions**	17 x 9.5 x 20 mm

Types and data – selection table

Type	w	d
NI2-Q9,5-AP6/S34	w012	d096

Q10

General data

Operating voltage	10…30 VDC	**Output**	, PNP
Switching distance	8 mm,	**Housing material**	PBT
Dimensions	25 x 10.8 x 42 mm		

Types and data – selection table

Type	Connection	w	d
BI8U-Q10-AP6X2	2 m cable	w012	d097
BI8U-Q10-AP6X2-V1131	male, M8 x 1	w013	d098

Many different types available, also as NPN version, see type code

Q10S

General data

Housing material	PP-GF20	**Dimensions**	16 x 10.2 x 27.8 mm

Lateral active face

Types and data – selection table

Type	Connection	Operating voltage	Output	Switching distance	w	d
BI2-Q10S-Y1X	2 m cable	8.2 VDC	NAMUR	2 mm,	w014	d099
BI2-Q10S-AP6X	2 m cable	10…30 VDC	, PNP	2 mm,	w012	d099
BI2-Q10S-VP6X	2 m cable	10…30 VDC	, PNP	2 mm,	w010	d099
BI2-Q10S-AZ31X	2 m cable	20…250 VAC / 10…300 VDC		2 mm,	w015	d099
BI2-Q10S-AP6X-0,2-PSG3M	0.2 m male, M8 x 1	10…30 VDC	, PNP	2 mm,	w013	d100
NI5U-Q10S-AP6X	2 m cable	10…30 VDC	, PNP	5 mm,	w012	d099
NI5U-Q10S-AP6X-0,3-PSG3M	0.3 m Cable with connector, M8 x 1	10…30 VDC	, PNP	5 mm,	w013	d100

Many different types available, also as NPN version, see type code

w Wiring diagrams on page 658 d Dimension drawing on page 670 Accessories on page 560

Q12

General data

Housing material	PA	**Dimensions**	26 x 12 x 40 mm

Types and data – selection table

Type	Connection	Operating voltage	Output	Switching distance	w	d
BI5U-Q12-AP6X2	2 m cable	10…30 VDC	, PNP	5 mm,	w012	d101
BI5U-Q12-VP6X2 7M	7 m cable	10…30 VDC	, PNP	5 mm,	w010	d101
BI5U-Q12-AP6X2-V1131	male, M8 x 1	10…30 VDC	, PNP	5 mm,	w013	d010
BI5U-Q12-AP6X2-H1141	male, M12 x 1	10…30 VDC	, PNP	5 mm,	w013	d102
BI2-Q12-AZ31X	2 m cable	20…250 VAC / 10…300 VDC		2 mm,	w015	d103
NI4-Q12-AZ31X	2 m cable	20…250 VAC / 10…300 VDC		4 mm,	w015	d103

Many different types available, also as NPN version, see type code

Q14

General data

Housing material	PBT	**Dimensions**	30 x 14 x 52 mm

Types and data – selection table

Type	Connection	Operating voltage	Output	Switching distance	w	d
BI10U-Q14-AP6X2	2 m cable	10…30 VDC	, PNP	10 mm,	w012	d104
BI10U-Q14-AP6X2-V1131	male, M8 x 1	10…30 VDC	, PNP	10 mm,	w013	d105
BI10-Q14-Y1X	2 m cable	8.2 VDC	NAMUR	10 mm,	w014	d106
BI10-Q14-ADZ32X2	2 m cable	20…250 VAC / 10…300 VDC		10 mm,	w016	d104
NI20-Q14-AP6X2	2 m cable	10…30 VDC	, PNP	20 mm,	w012	d104
NI20-Q14-AP6X2-V1131	male, M8 x 1	10…30 VDC	, PNP	20 mm,	w013	d105

Many different types available, also as NPN version, see type code

Q18

General data

Connection	2 m cable	**Operating voltage**	10…30 VDC
Output	__, PNP	**Switching distance**	5 mm,
Housing material	PBT	**Dimensions**	18 x 18 x 29 mm

Types and data – selection table

Type	w	d
NI5-Q18-AP6X	w012	d107

Many different types available, also as NPN version, see type code

Q20

General data

Housing material	PBT	**Dimensions**	40 x 20 x 68 mm

Types and data – selection table

Type	Connection	Operating voltage	Output	Switching distance	w	d
BI15U-Q20-AP6X2	2 m cable	10…30 VDC	__, PNP	15 mm,	w012	d108
BI15U-Q20-AP6X2-H1141	male, M12 x 1	10…30 VDC	__, PNP	15 mm,	w013	d109
BI15-Q20-Y1X	2 m cable	8.2 VDC	NAMUR	15 mm,	w014	d110
BI15-Q20-Y1X-H1141	male, M12 x 1	8.2 VDC	NAMUR	15 mm,	w017	d109
NI25-Q20-AP6X2	2 m cable	10…30 VDC	__, PNP	25 mm,	w012	d108
NI25-Q20-AP6X2-H1141	male, M12 x 1	10…30 VDC	__, PNP	25 mm,	w013	d109

Many different types available, also as NPN version, see type code

w Wiring diagrams on page 658 d Dimension drawing on page 670 Accessories on page 560

Q25

General data

Connection	2 m cable	**Operating voltage**	10…30 VDC
Output	__, PNP	**Switching distance**	10 mm,
Housing material	PBT	**Dimensions**	25 x 25.5 x 38.5 mm

Types and data – selection table

Type	w	d
NI10-Q25-AP6X	w012	d111

Many different types available, also as NPN version, see type code

CA25

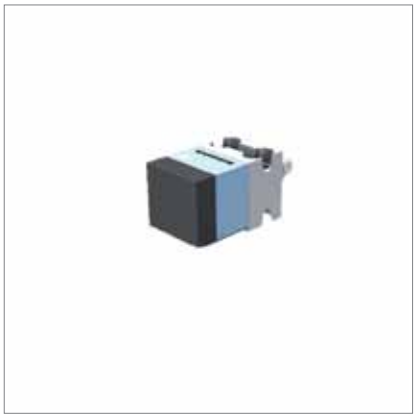

General data

Operating voltage	10…30 VDC	**Output**	__, PNP
Housing material	GD-CuZn	**Dimensions**	25 x 25 x 40 mm

Variable orientation of active face in 5 directions

Types and data – selection table

Type	Connection	Switching distance	w	d
BI10U-CA25-AP6X2-V1131	male, M8 x 1	10 mm,	w013	d112
BI10U-CA25-AP6X2-H1141	male, M12 x 1	10 mm,	w013	d113
NI15U-CA25-AP6X2-V1131	male, M8 x 1	15 mm,	w013	d112
NI15U-CA25-AP6X2-H1141	male, M12 x 1	15 mm,	w013	d113

QN26

General data

Connection	0.15 m Cable with connector, M12 x 1	**Operating voltage**	10…65 VDC
Output	, 2-wire	**Switching distance**	10 mm,
Dimensions	26 x 26 x 43 mm		

Variable orientation of active face in 4 directions

Types and data – selection table

Type	Housing material	w	d
BI10-QN26-AD4X-0,15-RS4.23/S90	PBT	w018	d114
BI10-QN26-AD4X-0,15XOR-RS4.23/S100-S1589	PBT, weldguard coated	w018	d115

CK40

General data

Housing material	PBT	**Dimensions**	40 x 40 x 65 mm

Variable orientation of active face in 5 directions

Types and data – selection table

Type	Connection	Operating voltage	Output	Switching distance	w	d
BI30U-CK40-AP6X2-H1141	male, M12 x 1	10…30 VDC	, PNP	30 mm,	w013	d116
BI20U-CK40-AP6X2-H1141	male, M12 x 1	10…30 VDC	, PNP	20 mm,	w013	d013
BI20U-CK40-VP4X2-H1141	male, M12 x 1	10…65 VDC	, PNP	20 mm,	w005	d013
BI15U-CK40-AP6X2-H1141	male, M12 x 1	10…30 VDC	, PNP	15 mm,	w013	d013
BI15U-CK40-VP4X2-H1141	male, M12 x 1	10…65 VDC	, PNP	15 mm,	w005	d013
BI15U-CK40-AD4X-H1144	male, M12 x 1	10…65 VDC	, 2-wire	15 mm,	w018	d013
BI15U-CK40-ADZ30X2-B1131	male, 7/8"	20…250 VAC / 10…300 VDC		15 mm,	w019	d117
BI15U-CK40-ADZ30X2-B3131	male, 1/2"	20…250 VAC / 10…300 VDC		15 mm,	w020	d118
BI15-CK40-Y1X-H1141	male, M12 x 1	8.2 VDC	NAMUR	15 mm,	w017	d119
BI15-CK40-AP6X2-H1141	male, M12 x 1	10…30 VDC	, PNP	15 mm,	w013	d013
BI15-CK40-AD4X-H1141	male, M12 x 1	10…65 VDC	, 2-wire	15 mm,	w021	d119
NI50U-CK40-AP6X2-H1141	male, M12 x 1	10…30 VDC	, PNP	50 mm,	w013	d116
NI50U-CK40-VP4X2-H1141	male, M12 x 1	10…65 VDC	, PNP	50 mm,	w005	d116
NI40U-CK40-AP6X2-H1141	male, M12 x 1	10…30 VDC	, PNP	40 mm,	w013	d116
NI35U-CK40-AP6X2-H1141	male, M12 x 1	10…30 VDC	, PNP	35 mm,	w013	d116

Table continues on the next page…

… Table starts on previous page

Type	Connection	Operating voltage	Output	Switching distance	w	d
NI35U-CK40-AD4X-H1144	male, M12 x 1	10…65 VDC	, 2-wire	35 mm,	w018	d116
NI35U-CK40-ADZ30X2-B1131	male, 7/8"	20…250 VAC / 10…300 VDC		35 mm,	w019	d120
NI35U-CK40-ADZ30X2-B3131	male, 1/2"	20…250 VAC / 10…300 VDC		35 mm,	w020	d121
NI25U-CK40-AP6X2-H1141	male, M12 x 1	10…30 VDC	, PNP	25 mm,	w013	d116
NI25U-CK40-VP4X2-H1141	male, M12 x 1	10…65 VDC	, PNP	25 mm,	w005	d116
NI35-CK40-AP6X2-H1141	male, M12 x 1	10…30 VDC	, PNP	35 mm,	w013	d116
NI20-CK40-Y1X-H1141	male, M12 x 1	8.2 VDC	NAMUR	20 mm,	w017	d119
NI20-CK40-AP6X2-H1141	male, M12 x 1	10…30 VDC	, PNP	20 mm,	w013	d013
NI20-CK40-AD4X-H1141	male, M12 x 1	10…65 VDC	, 2-wire	20 mm,	w021	d119

Many different types available, also as NPN version, see type code

CP40

General data

Housing material PBT **Dimensions** 40 x 40 x 114 mm

Variable orientation of active face in 9 directions

Types and data – selection table

Type	Connection	Operating voltage	Output	Switching distance	w	d
BI30U-CP40-AP6X2	Terminal chamber	10…30 VDC	, PNP	30 mm,	w022	d122
BI20U-CP40-AP6X2	Terminal chamber	10…30 VDC	, PNP	20 mm,	w022	d122
BI20U-CP40-VP4X2	Terminal chamber	10…65 VDC	, PNP	20 mm,	w023	d122
BI15U-CP40-AP6X2	Terminal chamber	10…30 VDC	, PNP	15 mm,	w022	d122
BI15U-CP40-VP4X2	Terminal chamber	10…65 VDC	, PNP	15 mm,	w023	d122
BI15U-CP40-VP4X2-H1141	male, M12 x 1	10…65 VDC	, PNP	15 mm,	w005	d123
BI15U-CP40-FDZ30X2	Terminal chamber	20…250 VAC / 10…300 VDC	,	15 mm,	w024	d122
BI20-CP40-Y1X	Terminal chamber	8.2 VDC	NAMUR	20 mm,	w025	d124
BI15-CP40-Y1X	Terminal chamber	8.2 VDC	NAMUR	15 mm,	w025	d124
BI15-CP40-AP6X2	Terminal chamber	10…30 VDC	, PNP	15 mm,	w022	d122
BI15-CP40-VP4X2	Terminal chamber	10…65 VDC	, PNP	15 mm,	w023	d122
BI15-CP40-AD4X	Terminal chamber	10…65 VDC	, 2-wire	15 mm,	w026	d124
BI15-CP40-FZ3X2	Terminal chamber	20…250 VAC / 10…300 VDC	,	15 mm,	w024	d122
NI50U-CP40-AP6X2	Terminal chamber	10…30 VDC	, PNP	50 mm,	w022	d122
NI50U-CP40-AP6X2-H1141	male, M12 x 1	10…30 VDC	, PNP	50 mm,	w013	d123
NI50U-CP40-VP4X2	Terminal chamber	10…65 VDC	, PNP	50 mm,	w023	d122
NI40U-CP40-AP6X2	Terminal chamber	10…30 VDC	, PNP	40 mm,	w022	d122
NI40U-CP40-VP4X2	Terminal chamber	10…65 VDC	, PNP	40 mm,	w023	d122
NI40U-CP40-VP4X2-H1141	male, M12 x 1	10…65 VDC	, PNP	40 mm,	w005	d123
NI40U-CP40-FDZ30X2	Terminal chamber	20…250 VAC / 10…300 VDC	,	40 mm,	w024	d122
NI35-CP40-VP4X2	Terminal chamber	10…65 VDC	, PNP	35 mm,	w023	d122
NI35-CP40-FZ3X2	Terminal chamber	20…250 VAC / 10…300 VDC	,	35 mm,	w024	d122
NI20-CP40-Y1X	Terminal chamber	8.2 VDC	NAMUR	20 mm,	w025	d124

Table continues on the next page…

… Table starts on previous page

Type	Connection	Operating voltage	Output	Switching distance	w	d
NI20-CP40-AP6X2	Terminal chamber	10…30 VDC	, PNP	20 mm,	w022	d122
NI20-CP40-VP4X2	Terminal chamber	10…65 VDC	, PNP	20 mm,	w023	d122
NI20-CP40-AD4X	Terminal chamber	10…65 VDC	, 2-wire	20 mm,	w026	d124
NI20-CP40-FZ3X2	Terminal chamber	20…250 VAC / 10…300 VDC	,	20 mm,	w024	d122

Many different types available, also as NPN version, see type code

QV40

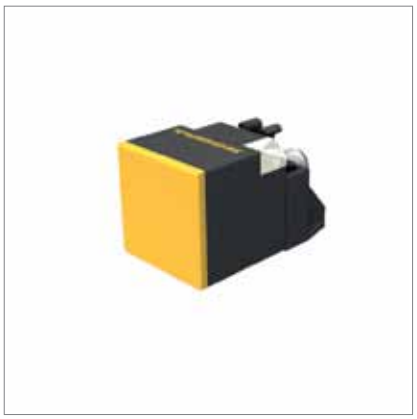

General data

Connection	male, M12 x 1	**Operating voltage**	10…30 VDC
Output	, PNP	**Housing material**	PBT
Dimensions	40 x 40 x 65 mm		

Variable orientation of active face in 5 directions

Types and data – selection table

Type	Switching distance	w	d
BI20U-QV40-AP6X2-H1141	20 mm,	w013	d125
NI50U-QV40-AP6X2-H1141	50 mm,	w013	d125

Q42

General data

Connection	male, M12 x 1	**Operating voltage**	10…30 VDC
Output	, PNP	**Switching distance**	50 mm,
Housing material	PA	**Dimensions**	42.5 x 42.5 x 68 mm

Types and data – selection table

Type	w	d
NI50U-Q42FWD-VP6X-H1141	w005	d126
NI50U-Q42TWD-VP6X-H1141	w005	d127

w Wiring diagrams on page 658 d Dimension drawing on page 670 Accessories on page 560

Q80

General data

Housing material	PBT	**Dimensions**	80 x 40 x 92 mm

Types and data – selection table

Type	Connection	Operating voltage	Output	Switching distance	w	d
BI50U-Q80-AP6X2-H1141	male, M12 x 1	10…30 VDC	, PNP	50 mm,	w013	d128
BI50U-Q80-VP4X2-H1141	male, M12 x 1	10…65 VDC	, PNP	50 mm,	w005	d128
BI50U-Q80-VP4X2-H1141/3GD	male, M12 x 1	10…65 VDC	, PNP	50 mm,	w005	d128
BI50-Q80-Y1X	2 m cable	8.2 VDC	NAMUR	50 mm,	w014	d129
NI75U-Q80-AP6X2-H1141	male, M12 x 1	10…30 VDC	, PNP	75 mm,	w013	d128
NI75U-Q80-VP4X2-H1141	male, M12 x 1	10…65 VDC	, PNP	75 mm,	w005	d128
NI60-Q80-Y1X	2 m cable	8.2 VDC	NAMUR	60 mm,	w014	d129

Many different types available, also as NPN version, see type code

CP80

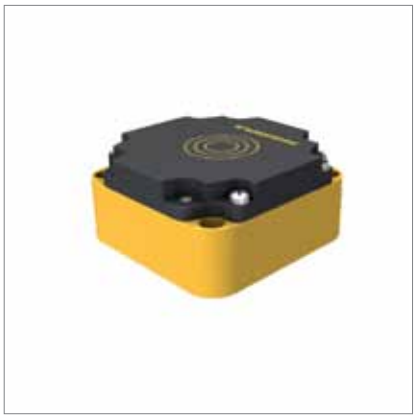

General data

Housing material	PBT	**Dimensions**	80 x 41 x 80 mm

Types and data – selection table

Type	Connection	Operating voltage	Output	Switching distance	w	d
BI40-CP80-VP4X2	Terminal chamber	10…65 VDC	, PNP	40 mm,	w023	d130
BI40-CP80-VP4X2-H1141	male, M12 x 1	10…65 VDC	, PNP	40 mm,	w005	d131
BI40-CP80-FZ3X2	Terminal chamber	20…250 VAC / 10…300 VDC	,	40 mm,	w024	d130
NI75U-CP80-VP4X2	Terminal chamber	10…65 VDC	, PNP	75 mm,	w023	d130
NI75U-CP80-VP4X2-H1141	male, M12 x 1	10…65 VDC	, PNP	75 mm,	w005	d131
NI75U-CP80-FDZ30X2	Terminal chamber	20…250 VAC / 10…300 VDC	,	75 mm,	w024	d130
NI50-CP80-VP4X2	Terminal chamber	10…65 VDC	, PNP	50 mm,	w023	d130
NI50-CP80-FZ3X2	Terminal chamber	20…250 VAC / 10…300 VDC	,	50 mm,	w024	d130
NI40-CP80-Y1	Terminal chamber	8.2 VDC	NAMUR	40 mm,	w025	d132
NI40-CP80-VP4X2	Terminal chamber	10…65 VDC	, PNP	40 mm,	w023	d130
NI40-CP80-FZ3X2	Terminal chamber	20…250 VAC / 10…300 VDC	,	40 mm,	w024	d130

Many different types available, also as NPN version, see type code

K90

General data

Housing material	PBT	**Dimensions**	75 x 60 x 130 mm

Types and data – selection table

Type	Connection	Operating voltage	Output	Switching distance	w	d
NI50-K90SR-Y1	Terminal chamber	8.2 VDC	NAMUR	50 mm,	w025	d133
NI100U-K90SR-VP4X2-H1141	male, M12 x 1	10…65 VDC	, PNP	100 mm,	w005	d134
NI100U-K90SR-VP4X2	Terminal chamber	10…65 VDC	, PNP	100 mm,	w023	d135
NI60-K90SR-VP4X2	Terminal chamber	10…65 VDC	, PNP	60 mm,	w023	d135
NI60-K90SR-FZ3X2	Terminal chamber	20…250 VAC / 10…300 VDC	,	60 mm,	w024	d135

Many different types available, also as NPN version, see type code

Q130

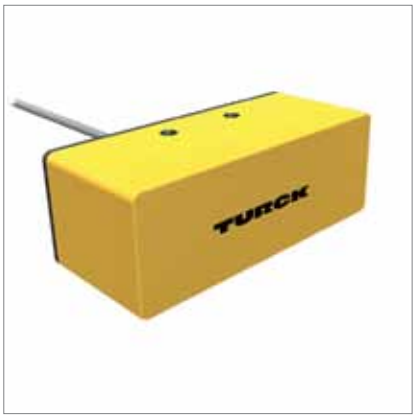

General data

Switching distance	30 mm,	**Housing material**	PBT
Dimensions	57 x 48 x 130 mm		

Types and data – selection table

Type	Connection	Operating voltage	Output	w	d
NI30-Q130-VP4X2	2 m cable	10…65 VDC	, PNP	w010	d136
NI30-Q130-ADZ30X2-B1131	male, 7/8"	20…250 VAC / 10…300 VDC		w027	d137
NI30-Q130-ADZ30X2	2 m cable	20…250 VAC / 10…300 VDC		w028	d136

Many different types available, also as NPN version, see type code

Wiring diagrams on page 658 Dimension drawing on page 670 Accessories on page 560

Cylindrical design - Thread

Threaded barrel sensors are available for all types of applications, ranging from the small 5 mm version to the big size PG36. In order to comply with the ambient conditions of individual applications, most sensors are available in different housing materials. The range of accessories is broad and enhances the functionality of the sensors if needed.

Features

- Rugged 4-hole LED
- Different thread lengths
- Rugged housing materials
- Connection cable with approved sheath quality
- Many different electrical output functions

Properties

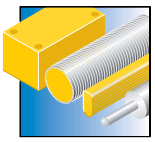

Designs
All standard thread sizes M5 x 0.5, M8 x 1, M12 x 1, M18 x 1, M30 x 1.5 and PG36 (G47)

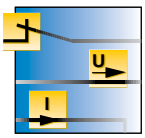

Electrical versions
NAMUR, 2, 3 and 4-wire DC, 2-wire AC/DC

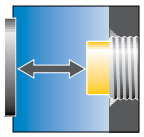

Switching distances
non-flush 1 … 25 mm and flush 3 mm … 25 mm

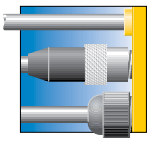

Electrical connections
Cable, connector, terminal chamber and pigtail

Materials
Chrome-plated brass (optionally PTFE-coated), stainless steel or rugged plastic housings

Special features
Factor 1, all metals extended temperature range, approvals (et al. ATEX and SIL)

Internet link
Scan the QR code to access our products on the internet

Hans Turck GmbH & Co. KG ▪ Tel. +49 208 49 52-0 ▪ Fax +49 208 49 52-264

M5

General data

Switching distance 1 mm, **Housing material** V4A (1.4404)

Types and data – selection table

Type	Connection	Operating voltage	Output	Dimensions	w	d
BI1-EG05-Y1	2 m cable	8.2 VDC	NAMUR	Ø 5 x 30 mm	w014	d138
BI1-EG05-AP6X-V1331	male, M8 x 1	10…30 VDC	, PNP	Ø 5 x 42.5 mm	w013	d139
BI1-EG05-RP6X-V1331	male, M8 x 1	10…30 VDC	, PNP	Ø 5 x 42.5 mm	w029	d139
BI1-EG05-AP6X	2 m cable	10…30 VDC	, PNP	Ø 5 x 30 mm	w012	d140
BI1-EG05-RP6X	2 m cable	10…30 VDC	, PNP	Ø 5 x 30 mm	w030	d140

Many different types available, also as NPN version, see type code

M8 – NAMUR

General data

Operating voltage 8.2 VDC **Output** NAMUR

Types and data – selection table

Type	Connection	Switching distance	Housing material	Dimensions	w	d
BI1,5-EG08K-Y1-H1341	male, M12 x 1	1.5 mm,	V4A (1.4404)	Ø 8 x 39 mm	w017	d141
BI1,5-EG08-Y1-H1341	male, M12 x 1	1.5 mm,	V4A (1.4404)	Ø 8 x 57 mm	w017	d142
NI3-EG08K-Y1-H1341	male, M12 x 1	3 mm,	V4A (1.4404)	Ø 8 x 39 mm	w017	d143
BI1,5-EG08K-Y1	2 m cable	1.5 mm,	V4A (1.4404)	Ø 8 x 23.6 mm	w014	d144
NI3-EG08K-Y1	2 m cable	3 mm,	V4A (1.4404)	Ø 8 x 23.6 mm	w014	d145
BI1,5-GS880-Y1	2 m cable	1.5 mm,	V2A (1.4301)	Ø 8 x 47 mm	w014	d146

w Wiring diagrams on page 658 d Dimension drawing on page 670 Accessories on page 560

M8 – 2-wire DC

General data

Operating voltage	10…55 VDC	**Output**	, 2-wire
Housing material	V4A (1.4404)		

Types and data – selection table

Type	Connection	Switching distance	Dimensions	w	d
BI2-EG08-AG41X-H1341	male, M12 x 1	2 mm,	Ø 8 x 57 mm	w031	d027
NI4-EG08-AG41X	2 m cable	4 mm,	Ø 8 x 41.6 mm	w032	d147
BI2-EG08-AG41X	2 m cable	2 mm,	Ø 8 x 42 mm	w032	d148

M8 – 3-wire DC

General data

Operating voltage	10…30 VDC

Types and data – selection table

Type	Connection	Output	Switching distance	Housing material	Dimensions	w	d
BI1,5-EG08K-AP6X-V1131	male, M8 x 1	, PNP	1.5 mm,	V4A (1.4404)	Ø 8 x 31 mm	w013	d149
BI2-EG08K-AP6X-V1131	male, M8 x 1	, PNP	2 mm,	V4A (1.4404)	Ø 8 x 31 mm	w013	d149
BI1,5U-EG08-AP6X-V1131	male, M8 x 1	, PNP	1.5 mm,	V4A (1.4404)	Ø 8 x 49 mm	w013	d150
BI1,5U-EGT08-AP6X-V1131	male, M8 x 1	, PNP	1.5 mm,	V2A (1.4301), PTFE-coated	Ø 8 x 49 mm	w013	d150
BI2U-EG08-AP6X-V1131	male, M8 x 1	, PNP	2 mm,	V4A (1.4404)	Ø 8 x 49 mm	w013	d150
BI2-EG08-AP6X-V1131	male, M8 x 1	, PNP	2 mm,	V4A (1.4404)	Ø 8 x 49 mm	w013	d150
BI2U-EGT08-AP6X-V1131	male, M8 x 1	, PNP	2 mm,	V2A (1.4301), PTFE-coated	Ø 8 x 49 mm	w013	d150
BI2U-EG08-RP6X-V1131	male, M8 x 1	, PNP	2 mm,	V4A (1.4404)	Ø 8 x 49 mm	w029	d150
BI1,5-EG08-AP6X-V1131	male, M8 x 1	, PNP	1.5 mm,	V4A (1.4404)	Ø 8 x 49 mm	w013	d150
NI3-EG08K-AP6X-V1131	male, M8 x 1	, PNP	3 mm,	V4A (1.4404)	Ø 8 x 31 mm	w013	d151
NI3-EG08-AP6X-V1131	male, M8 x 1	, PNP	3 mm,	V4A (1.4404)	Ø 8 x 49 mm	w013	d152
NI4U-EG08-AP6X-V1131	male, M8 x 1	, PNP	4 mm,	V4A (1.4404)	Ø 8 x 49 mm	w013	d153
NI6U-EG08-AP6X-V1131	male, M8 x 1	, PNP	6 mm,	V4A (1.4404)	Ø 8 x 49 mm	w013	d153
NI6U-EG08-RP6X-V1131	male, M8 x 1	, PNP	6 mm,	V4A (1.4404)	Ø 8 x 49 mm	w029	d153
BI1,5-EG08K-AP6X-H1341	male, M12 x 1	, PNP	1.5 mm,	V4A (1.4404)	Ø 8 x 39 mm	w013	d154
BI2-EG08K-AP6X-H1341	male, M12 x 1	, PNP	2 mm,	V4A (1.4404)	Ø 8 x 39 mm	w013	d154

Table continues on the next page…

… Table starts on previous page

Type	Connection	Output	Switching distance	Housing material	Dimensions	w	d
BI1,5U-EG08-AP6X-H1341	male, M12 x 1	, PNP	1.5 mm,	V4A (1.4404)	Ø 8 x 57 mm	w013	d027
BI1,5U-EGT08-AP6X-H1341	male, M12 x 1	, PNP	1.5 mm,	V2A (1.4301), PTFE-coated	Ø 8 x 57 mm	w013	d155
BI2U-EG08-AP6X-H1341	male, M12 x 1	, PNP	2 mm,	V4A (1.4404)	Ø 8 x 57 mm	w013	d027
BI2-EG08-AP6X-H1341	male, M12 x 1	, PNP	2 mm,	V4A (1.4404)	Ø 8 x 57 mm	w013	d027
BI2U-EGT08-AP6X-H1341	male, M12 x 1	, PNP	2 mm,	V2A (1.4301), PTFE-coated	Ø 8 x 57 mm	w013	d027
BI2U-EG08-RP6X-H1341	male, M12 x 1	, PNP	2 mm,	V4A (1.4404)	Ø 8 x 57 mm	w008	d027
BI1,5-EG08WD-AP6X-H1341	male, M12 x 1	, PNP	1.5 mm,	V4A (1.4404)	Ø 8 x 57 mm	w013	d027
BI1,5-EG08-AP6X-H1341	male, M12 x 1	, PNP	1.5 mm,	V4A (1.4404)	Ø 8 x 57 mm	w013	d027
NI3-EG08K-AP6X-H1341	male, M12 x 1	, PNP	3 mm,	V4A (1.4404)	Ø 8 x 39 mm	w013	d156
NI4U-EG08-AP6X-H1341	male, M12 x 1	, PNP	4 mm,	V4A (1.4404)	Ø 8 x 57 mm	w013	d157
NI6U-EG08-AP6X-H1341	male, M12 x 1	, PNP	6 mm,	V4A (1.4404)	Ø 8 x 57 mm	w013	d157
NI6U-EG08-RP6X-H1341	male, M12 x 1	, PNP	6 mm,	V4A (1.4404)	Ø 8 x 57 mm	w008	d157
NI3-EG08-AP6X-H1341	male, M12 x 1	, PNP	3 mm,	V4A (1.4404)	Ø 8 x 57 mm	w013	d158
BI1,5-EG08K-AP6X	2 m cable	, PNP	1.5 mm,	V4A (1.4404)	Ø 8 x 23.6 mm	w012	d159
BI2-EG08K-AP6X	2 m cable	, PNP	2 mm,	V4A (1.4404)	Ø 8 x 23.6 mm	w012	d159
BI1,5U-EG08-AP6X	2 m cable	, PNP	1.5 mm,	V4A (1.4404)	Ø 8 x 42 mm	w012	d148
BI2U-EG08-AP6X	2 m cable	, PNP	2 mm,	V4A (1.4404)	Ø 8 x 42 mm	w012	d148
BI2-EG08-AP6X	2 m cable	, PNP	2 mm,	V4A (1.4404)	Ø 8 x 42 mm	w012	d148
BI1,5-EG08-AP6X	2 m cable	, PNP	1.5 mm,	V4A (1.4404)	Ø 8 x 42 mm	w012	d148
NI3-EG08K-AP6X	2 m cable	, PNP	3 mm,	V4A (1.4404)	Ø 8 x 23.6 mm	w012	d160
NI4U-EG08-AP6X	2 m cable	, PNP	4 mm,	V4A (1.4404)	Ø 8 x 42 mm	w012	d161
NI6U-EG08-AP6X	2 m cable	, PNP	6 mm,	V4A (1.4404)	Ø 8 x 42 mm	w012	d161
NI3-EG08-AP6X	2 m cable	, PNP	3 mm,	V4A (1.4404)	Ø 8 x 41.6 mm	w012	d147

Many different types available, also as NPN version, see type code

M8 – 4-wire DC

General data

Connection	male, M12 x 1	**Operating voltage**	10…30 VDC
Output	, PNP	**Switching distance**	2 mm,
Housing material	V4A (1.4404)		

Types and data – selection table

Type	Dimensions	w	d
BI2-EG08-VP6X-H1341	Ø 8 x 57 mm	w005	d027
BI2-EG08K-VP6X-H1341	Ø 8 x 39 mm	w005	d154

Many different types available, also as NPN version, see type code

w Wiring diagrams on page 658 d Dimension drawing on page 670 Accessories on page 560

M8 – 2-wire AC/DC

General data

Connection	2 m cable	**Operating voltage**	20…132 VAC / 10…140 VDC
Output		**Switching distance**	2 mm,
Housing material	V4A (1.4404)	**Dimensions**	Ø 8 x 42 mm

Types and data – selection table

Type	w	d
BI2-EG08-AZ14X	w033	d148

M12 – NAMUR

General data

Operating voltage	8.2 VDC	**Output**	NAMUR

Types and data – selection table

Type	Connection	Switching distance	Housing material	Dimensions	w	d
NI5-EM12WDTC-Y1X	Terminal chamber, Removable cage clamp terminals	5 mm,	V4A (1.4404)	Ø 12 x 70 mm	w025	d162
BI2-EM12WDTC-Y1X	Terminal chamber, Removable cage clamp terminals	2 mm,	V4A (1.4404)	Ø 12 x 70 mm	w025	d163
BI2-G12SK-Y1X	Terminal chamber	2 mm,	CuZn-Cr	Ø 12 x 65 mm	w025	d164
BI2-EG12SK-Y1X	Terminal chamber	2 mm,	V2A (1.4301)	Ø 12 x 65 mm	w025	d164
BI2-P12SK-Y1X	Terminal chamber	2 mm,	PA	Ø 12 x 70 mm	w025	d165
NI5-P12SK-Y1X	Terminal chamber	5 mm,	PA	Ø 12 x 70 mm	w025	d165
NI5-G12SK-Y1X	Terminal chamber	5 mm,	CuZn-Cr	Ø 12 x 65 mm	w025	d166
NI5-EG12SK-Y1X	Terminal chamber	5 mm,	V2A (1.4301)	Ø 12 x 65 mm	w025	d166
NI5-G12-Y1X	2 m cable	5 mm,	CuZn-Cr	Ø 12 x 34 mm	w014	d167
BI2-P12-Y1X	2 m cable	2 mm,	PA	Ø 12 x 34 mm	w014	d168
NI5-P12-Y1X	2 m cable	5 mm,	PA	Ø 12 x 34 mm	w014	d168
BI2-G12-Y1X	2 m cable	2 mm,	CuZn-Cr	Ø 12 x 34 mm	w014	d169
BI2-M12-Y1X-H1141	male, M12 x 1	2 mm,	CuZn-Cr	Ø 12 x 52 mm	w017	d170
BI2-EM12-Y1X-H1141	male, M12 x 1	2 mm,	V2A (1.4301)	Ø 12 x 52 mm	w017	d170
NI5-M12-Y1X-H1141	male, M12 x 1	5 mm,	CuZn-Cr	Ø 12 x 52 mm	w017	d171
NI5-EM12-Y1X-H1141	male, M12 x 1	5 mm,	V2A (1.4301)	Ø 12 x 52 mm	w017	d171

M12 – 2-wire DC

General data

Operating voltage 10…65 VDC **Output** ⎓, 2-wire

Types and data – selection table

Type	Connection	Switching distance	Housing material	Dimensions	w	d
BI2-M12-AD4X-H1141	male, M12 x 1	2 mm,	CuZn-Cr	Ø 12 x 52 mm	w021	d170
BI2U-M12E-AD4X-H1144	male, M12 x 1	2 mm,	CuZn-Cr	Ø 12 x 62 mm	w018	d172
BI2U-MT12E-AD4X-H1144	male, M12 x 1	2 mm,	CuZn-T	Ø 12 x 62 mm	w018	d173
NI4-M12-AD4X-H1141	male, M12 x 1	4 mm,	CuZn-Cr	Ø 12 x 52 mm	w021	d171
NI8-M12-AD4X-H1141	male, M12 x 1	8 mm,	CuZn-Cr	Ø 12 x 52 mm	w021	d171
NI5U-M12E-AD4X-H1144	male, M12 x 1	5 mm,	CuZn-Cr	Ø 12 x 62 mm	w018	d174
NI5U-MT12E-AD4X-H1144	male, M12 x 1	5 mm,	CuZn-T	Ø 12 x 62 mm	w018	d175
BI3-G12K-AD4X	2 m cable	3 mm,	CuZn-Cr	Ø 12 x 34 mm	w034	d169
NI4-M12-AD4X	2 m cable	4 mm,	CuZn-Cr	Ø 12 x 54 mm	w034	d176
NI8-M12-AD4X	2 m cable	8 mm,	CuZn-Cr	Ø 12 x 54 mm	w034	d176
NI5U-M12E-AD4X	2 m cable	5 mm,	CuZn-Cr	Ø 12 x 64 mm	w034	d177
NI8-G12K-AD4X	2 m cable	8 mm,	CuZn-Cr	Ø 12 x 34 mm	w034	d167
BI2U-M12E-AD4X	2 m cable	2 mm,	CuZn-Cr	Ø 12 x 64 mm	w034	d178
BI2-S12-AD4X	2 m cable	2 mm,	PA	Ø 12 x 60 mm	w034	d179
NI4-S12-AD4X	2 m cable	4 mm,	PA	Ø 12 x 64 mm	w034	d179
BI2-M12-AD4X	2 m cable	2 mm,	CuZn-Cr	Ø 12 x 54 mm	w034	d180
BI3-M12-AD4X	2 m cable	3 mm,	CuZn-Cr	Ø 12 x 54 mm	w034	d180

w Wiring diagrams on page 658 d Dimension drawing on page 670 Accessories on page 560

M12 – 3-wire DC

General data

Operating voltage 10…30 VDC

Types and data – selection table

Type	Connection	Output	Switching distance	Housing material	Dimensions	w	d
NI8U-EG12SK-AP6X	Terminal chamber	__, PNP	8 mm,	V2A (1.4301)	Ø 12 x 75 mm	w022	d181
NI5-G12SK-AP6X	Terminal chamber	__, PNP	5 mm,	CuZn-Cr	Ø 12 x 75 mm	w022	d181
NI10U-EM12WDTC-AP6X	Terminal chamber, Removable cage clamp terminals	__, PNP	10 mm,	V4A (1.4404)	Ø 12 x 80 mm	w022	d182
BI3U-EG12SK-AP6X	Terminal chamber	__, PNP	3 mm,	V2A (1.4301)	Ø 12 x 75 mm	w022	d183
BI2-G12SK-AP6X	Terminal chamber	__, PNP	2 mm,	CuZn-Cr	Ø 12 x 75 mm	w022	d183
BI3U-P12SK-AP6X	Terminal chamber	__, PNP	3 mm,	PA	Ø 12 x 75 mm	w022	d184
NI8U-P12SK-AP6X	Terminal chamber	__, PNP	8 mm,	PA	Ø 12 x 75 mm	w022	d184
BI2-P12SK-AP6X	Terminal chamber	__, PNP	2 mm,	PA	Ø 12 x 75 mm	w022	d184
NI5-P12SK-AP6X	Terminal chamber	__, PNP	5 mm,	PA	Ø 12 x 75 mm	w022	d184
BI4U-EM12WDTC-AP6X	Terminal chamber, Removable cage clamp terminals	__, PNP	4 mm,	V4A (1.4404)	Ø 12 x 80 mm	w022	d185
BI4U-M12-AP6X-V1131	male, M8 x 1	__, PNP	4 mm,	CuZn-Cr	Ø 12 x 52 mm	w013	d186
NI10U-M12-AP6X-V1131	male, M8 x 1	__, PNP	10 mm,	CuZn-Cr	Ø 12 x 52 mm	w013	d039
NI10U-M12-AP6X	2 m cable	__, PNP	10 mm,	CuZn-Cr	Ø 12 x 54 mm	w012	d176
NI8U-M12-AP6X	2 m cable	__, PNP	8 mm,	CuZn-Cr	Ø 12 x 54 mm	w012	d176
NI8U-EM12-AP6X	2 m cable	__, PNP	8 mm,	V2A (1.4301)	Ø 12 x 54 mm	w012	d176
NI10U-EM12WD-AP6X	2 m cable	__, PNP	10 mm,	V4A (1.4404)	Ø 12 x 52 mm	w012	d187
NI5-G12K-AP6X	2 m cable	__, PNP	5 mm,	CuZn-Cr	Ø 12 x 34 mm	w012	d167
BI4U-EM12WD-AP6X	2 m cable	__, PNP	4 mm,	V4A (1.4404)	Ø 12 x 52 mm	w012	d188
BI3U-M12-AP6X	2 m cable	__, PNP	3 mm,	CuZn-Cr	Ø 12 x 54 mm	w012	d180
BI3U-EM12-AP6X	2 m cable	__, PNP	3 mm,	V2A (1.4301)	Ø 12 x 54 mm	w012	d180
BI4U-M12-AP6X	2 m cable	__, PNP	4 mm,	CuZn-Cr	Ø 12 x 54 mm	w012	d180
BI2-M12-AP6X	2 m cable	__, PNP	2 mm,	CuZn-Cr	Ø 12 x 54 mm	w012	d180
BI4-M12-AP6X	2 m cable	__, PNP	4 mm,	CuZn-Cr	Ø 12 x 54 mm	w012	d180
BI3U-S12-AP6X	2 m cable	__, PNP	3 mm,	PBT	Ø 12 x 54 mm	w012	d189
NI8U-S12-AP6X	2 m cable	__, PNP	8 mm,	PBT	Ø 12 x 54 mm	w012	d189
BI2-G12K-AP6X	2 m cable	__, PNP	2 mm,	CuZn-Cr	Ø 12 x 34 mm	w012	d169
BI4-G12K-AP6X	2 m cable	__, PNP	4 mm,	CuZn-Cr	Ø 12 x 34 mm	w012	d169
BI4-M12-AP6X 7M	7 m cable	__, PNP	4 mm,	CuZn-Cr	Ø 12 x 54 mm	w012	d180
BI2-G12K-AP6X-H1141	male, M12 x 1	__, PNP	2 mm,	CuZn-Cr	Ø 12 x 42 mm	w013	d190
BI3U-M12-AP6X-H1141	male, M12 x 1	__, PNP	3 mm,	CuZn-Cr	Ø 12 x 52 mm	w013	d170
BI3U-EM12-AP6X-H1141	male, M12 x 1	__, PNP	3 mm,	V2A (1.4301)	Ø 12 x 52 mm	w013	d170
BI4U-M12-AP6X-H1141	male, M12 x 1	__, PNP	4 mm,	CuZn-Cr	Ø 12 x 52 mm	w013	d170
BI4U-MT12-AP6X-H1141	male, M12 x 1	__, PNP	4 mm,	CuZn-T	Ø 12 x 52 mm	w013	d191
BI4U-EM12WD-AP6X-H1141	male, M12 x 1	__, PNP	4 mm,	V4A (1.4404)	Ø 12 x 52 mm	w013	d170
Bi4U-M12-RP6X-H1141	male, M12 x 1	+_, PNP	4 mm,	CuZn-Cr	Ø 12 x 52 mm	w008	d170
BI2-M12-AP6X-H1141	male, M12 x 1	__, PNP	2 mm,	CuZn-Cr	Ø 12 x 52 mm	w013	d170
BI4-M12-AP6X-H1141	male, M12 x 1	__, PNP	4 mm,	CuZn-Cr	Ø 12 x 52 mm	w013	d170

… Table starts on previous page

Type	Connection	Output	Switching distance	Housing material	Dimensions	w	d
BI3U-MT12-AP6X-H1141	male, M12 x 1	, PNP	3 mm,	CuZn-T	Ø 12 x 52 mm	w013	d191
BI3U-S12-AP6X-H1141	male, M12 x 1	, PNP	3 mm,	PBT	Ø 12 x 52 mm	w013	d192
NI8U-S12-AP6X-H1141	male, M12 x 1	, PNP	8 mm,	PBT	Ø 12 x 52 mm	w013	d192
NI8U-M12EE-AP6X-H1141	male, M12 x 1	, PNP	8 mm,	CuZn-Cr	Ø 12 x 72 mm	w013	d193
BI3U-M12EE-AP6X-H1141	male, M12 x 1	, PNP	3 mm,	CuZn-Cr	Ø 12 x 72 mm	w013	d194
NI10U-M12-AP6X-H1141	male, M12 x 1	, PNP	10 mm,	CuZn-Cr	Ø 12 x 52 mm	w013	d171
NI10U-MT12-AP6X-H1141	male, M12 x 1	, PNP	10 mm,	CuZn-T	Ø 12 x 52 mm	w013	d195
NI10U-EM12WD-AP6X-H1141	male, M12 x 1	, PNP	10 mm,	V4A (1.4404)	Ø 12 x 52 mm	w013	d196
NI10U-M12-RP6X-H1141	male, M12 x 1	, PNP	10 mm,	CuZn-Cr	Ø 12 x 52 mm	w008	d171
NI10U-EM12WD-AP6X-H1141/3GD	male, M12 x 1	, PNP	10 mm,	V4A (1.4404)	Ø 12 x 52 mm	w013	d196
NI8U-M12-AP6X-H1141	male, M12 x 1	, PNP	8 mm,	CuZn-Cr	Ø 12 x 52 mm	w013	d171
NI8U-MT12-AP6X-H1141	male, M12 x 1	, PNP	8 mm,	CuZn-T	Ø 12 x 52 mm	w013	d195
NI8U-EM12-AP6X-H1141	male, M12 x 1	, PNP	8 mm,	V2A (1.4301)	Ø 12 x 52 mm	w013	d171
BI4U-EM12WD-AP6X-H1141/3GD	male, M12 x 1	, PNP	4 mm,	V4A (1.4404)	Ø 12 x 52 mm	w013	d170
NI8-M12-AP6X-H1141	male, M12 x 1	, PNP	8 mm,	CuZn-Cr	Ø 12 x 52 mm	w013	d171
NI10U-M12E-AP6X-H1141	male, M12 x 1	, PNP	10 mm,	CuZn-Cr	Ø 12 x 62 mm	w013	d174

Many different types available, also as NPN version, see type code

M12 – 4-wire DC

General data

Output , PNP **Housing material** CuZn-Cr

Types and data – selection table

Type	Connection	Operating voltage	Switching distance	Dimensions	w	d
NI10U-M12E-VP44X	2 m cable	10…55 VDC	10 mm,	Ø 12 x 64 mm	w010	d177
BI4U-M12E-VP44X	2 m cable	10…55 VDC	4 mm,	Ø 12 x 64 mm	w010	d178
BI4-M12-VP6X	2 m cable	10…30 VDC	4 mm,	Ø 12 x 54 mm	w010	d180
BI4-M12-VP6X 7M	7 m cable	10…30 VDC	4 mm,	Ø 12 x 54 mm	w010	d180
NI8-M12-VP6X 7M	7 m cable	10…30 VDC	8 mm,	Ø 12 x 54 mm	w010	d176
BI3U-M12E-VP4X-H1141	male, M12 x 1	10…65 VDC	3 mm,	Ø 12 x 62 mm	w005	d172
BI4U-M12E-VP44X-H1141	male, M12 x 1	10…55 VDC	4 mm,	Ø 12 x 62 mm	w035	d172
BI4U-M12-VP44X-H1141 L80	male, M12 x 1	10…55 VDC	4 mm,	Ø 12 x 80 mm	w035	d197
BI4U-M12-VP44X-H1141 L100	male, M12 x 1	10…55 VDC	4 mm,	Ø 12 x 100 mm	w035	d198
NI10U-M12E-VP44X-H1141	male, M12 x 1	10…55 VDC	10 mm,	Ø 12 x 62 mm	w035	d174
NI8U-M12E-VP4X-H1141	male, M12 x 1	10…65 VDC	8 mm,	Ø 12 x 62 mm	w005	d174
NI8-M12-VP6X-H1141	male, M12 x 1	10…30 VDC	8 mm,	Ø 12 x 52 mm	w005	d171
BI4-M12-VP6X-H1141	male, M12 x 1	10…30 VDC	4 mm,	Ø 12 x 52 mm	w005	d170

Many different types available, also as NPN version, see type code

w Wiring diagrams on page 658 d Dimension drawing on page 670 Accessories on page 560

M12 – 2-wire AC/DC

General data

Operating voltage 20…250 VAC / 10…300 VDC **Output**

Types and data – selection table

Type	Connection	Switching distance	Housing material	Dimensions	w	d
BI2U-G12-ADZ32X-B3131	male, 1/2"	2 mm,	CuZn-Cr	Ø 12 x 71 mm	w036	d199
NI8U-G12-ADZ32X-B3131	male, 1/2"	8 mm,	CuZn-Cr	Ø 12 x 71 mm	w036	d200
BI2-S12-AZ31X	2 m cable	2 mm,	PA	Ø 12 x 60 mm	w015	d179
NI4-S12-AZ31X	2 m cable	4 mm,	PA	Ø 12 x 64 mm	w015	d179
BI2-M12-AZ31X	2 m cable	2 mm,	CuZn-Cr	Ø 12 x 64 mm	w015	d178
NI4-M12-AZ31X	2 m cable	4 mm,	CuZn-Cr	Ø 12 x 64 mm	w015	d201

M18 – NAMUR

General data

Operating voltage 8.2 VDC **Output** NAMUR

Types and data – selection table

Type	Connection	Switching distance	Housing material	Dimensions	w	d
BI5-M18-Y1X-H1141	male, M12 x 1	5 mm,	CuZn-Cr	Ø 18 x 52 mm	w017	d202
BI5-EM18-Y1X-H1141	male, M12 x 1	5 mm,	V2A (1.4305)	Ø 18 x 52 mm	w017	d202
NI10-M18-Y1X-H1141	male, M12 x 1	10 mm,	CuZn-Cr	Ø 18 x 52 mm	w017	d203
NI10-EM18-Y1X-H1141	male, M12 x 1	10 mm,	V2A (1.4301)	Ø 18 x 52 mm	w017	d203
BI5-P18-Y1X	2 m cable	5 mm,	PA	Ø 18 x 34 mm	w014	d204
NI10-P18-Y1X	2 m cable	10 mm,	PA	Ø 18 x 34 mm	w014	d204
BI5-G18-Y1X	2 m cable	5 mm,	CuZn-Cr	Ø 18 x 34 mm	w014	d205
NI10-G18-Y1X	2 m cable	10 mm,	CuZn-Cr	Ø 18 x 34 mm	w014	d206
NI14-G18-Y1X	2 m cable	14 mm,	CuZn-Cr	Ø 18 x 34 mm	w014	d206
BI5-EM18WDTC-Y1X	Terminal chamber, Removable cage clamp terminals	5 mm,	V4A (1.4404)	Ø 18 x 71 mm	w025	d207
NI10-EM18WDTC-Y1X	Terminal chamber, Removable cage clamp terminals	10 mm,	V4A (1.4404)	Ø 18 x 71 mm	w025	d208

Table continues on the next page…

… Table starts on previous page

Type	Connection	Switching distance	Housing material	Dimensions	w	d
BI5-G18SK-Y1X	Terminal chamber	5 mm,	CuZn-Cr	Ø 18 x 67 mm	w025	d209
BI5-EG18SK-Y1X	Terminal chamber	5 mm,	V2A (1.4301)	Ø 18 x 67 mm	w025	d209
NI10-P18SK-Y1X	Terminal chamber	10 mm,	PA	Ø 18 x 67 mm	w025	d210
NI10-EG18SK-Y1X	Terminal chamber	10 mm,	V2A (1.4301)	Ø 18 x 67 mm	w025	d211
BI5-P18SK-Y1X	Terminal chamber	5 mm,	PA	Ø 18 x 67 mm	w025	d210
NI10-G18SK-Y1X	Terminal chamber	10 mm,	CuZn-Cr	Ø 18 x 67 mm	w025	d211

M18 – 2-wire DC

General data

Operating voltage 10…65 VDC **Output** , 2-wire

Types and data – selection table

Type	Connection	Switching distance	Housing material	Dimensions	w	d
BI5-M18-AD4X-H1141	male, M12 x 1	5 mm,	CuZn-Cr	Ø 18 x 52 mm	w021	d202
BI7-M18-AD4X-H1141	male, M12 x 1	7 mm,	CuZn-Cr	Ø 18 x 52 mm	w021	d202
BI5U-M18M-AD4X-H1144	male, M12 x 1	5 mm,	CuZn-Cr	Ø 18 x 61.5 mm	w018	d212
BI5U-MT18M-AD4X-H1144	male, M12 x 1	5 mm,	CuZn-T	Ø 18 x 61.5 mm	w018	d212
NI10U-M18M-AD4X-H1144	male, M12 x 1	10 mm,	CuZn-Cr	Ø 18 x 61.5 mm	w018	d213
NI10U-MT18M-AD4X-H1144	male, M12 x 1	10 mm,	CuZn-T	Ø 18 x 61.5 mm	w018	d214
NI8-M18-AD4X-H1141	male, M12 x 1	8 mm,	CuZn-Cr	Ø 18 x 52 mm	w021	d203
BI7-G18K-AD4X	2 m cable	7 mm,	CuZn-Cr	Ø 18 x 34 mm	w034	d205
BI5-M18-AD4X	2 m cable	5 mm,	CuZn-Cr	Ø 18 x 54 mm	w034	d215
BI7-M18-AD4X	2 m cable	7 mm,	CuZn-Cr	Ø 18 x 54 mm	w034	d215
NI10U-M18M-AD4X	2 m cable	10 mm,	CuZn-Cr	Ø 18 x 64 mm	w034	d216
BI5-S18-AD4X	2 m cable	5 mm,	PA	Ø 18 x 64 mm	w034	d217
NI8-S18-AD4X	2 m cable	8 mm,	PA	Ø 18 x 64 mm	w034	d217
NI8-M18-AD4X	2 m cable	8 mm,	CuZn-Cr	Ø 18 x 54 mm	w034	d218

w Wiring diagrams on page 658 d Dimension drawing on page 670 Accessories on page 560

M18 – 3-wire DC

General data

Operating voltage 10…30 VDC

Types and data – selection table

Type	Connection	Output	Switching distance	Housing material	Dimensions	w	d
BI5-G18KK-AP6-H1141	male, M12 x 1	, PNP	5 mm,	CuZn-Cr	Ø 18 x 30 mm	w013	d219
BI8-M18K-AP6X-H1141	male, M12 x 1	, PNP	8 mm,	CuZn-Cr	Ø 18 x 46 mm	w013	d220
BI5U-M18-AP6X-H1141	male, M12 x 1	, PNP	5 mm,	CuZn-Cr	Ø 18 x 52 mm	w013	d202
BI8U-M18-AP6X-H1141	male, M12 x 1	, PNP	8 mm,	CuZn-Cr	Ø 18 x 52 mm	w013	d202
BI8U-M18-RP6X-H1141	male, M12 x 1	, PNP	8 mm,	CuZn-Cr	Ø 18 x 52 mm	w008	d202
BI8-M18-AP6X-H1141	male, M12 x 1	, PNP	8 mm,	CuZn-Cr	Ø 18 x 52 mm	w013	d202
BI5-M18-AP6X-H1141	male, M12 x 1	, PNP	5 mm,	CuZn-Cr	Ø 18 x 52 mm	w013	d202
BI8U-MT18-AP6X-H1141	male, M12 x 1	, PNP	8 mm,	CuZn-T	Ø 18 x 52 mm	w013	d221
BI8U-EM18WD-AP6X-H1141	male, M12 x 1	, PNP	8 mm,	V4A (1.4404)	Ø 18 x 52 mm	w013	d202
BI8U-EM18WD-AP6X-H1141/3GD	male, M12 x 1	, PNP	8 mm,	V4A (1.4404)	Ø 18 x 52 mm	w013	d202
BI5U-EM18-AP6X-H1141	male, M12 x 1	, PNP	5 mm,	V2A (1.4301)	Ø 18 x 52 mm	w013	d202
BI5U-MT18-AP6X-H1141	male, M12 x 1	, PNP	5 mm,	CuZn-T	Ø 18 x 52 mm	w013	d221
BI5U-S18-AP6X-H1141	male, M12 x 1	, PNP	5 mm,	PBT	Ø 18 x 52 mm	w013	d222
NI12U-S18-AP6X-H1141	male, M12 x 1	, PNP	12 mm,	PBT	Ø 18 x 52 mm	w013	d222
BI8U-MT18E-AP6X-H1141	male, M12 x 1	, PNP	8 mm,	CuZn-T	Ø 18 x 72 mm	w013	d223
BI5U-MT18E-AP6X-H1141	male, M12 x 1	, PNP	5 mm,	CuZn-T	Ø 18 x 72 mm	w013	d223
NI12U-EM18-AP6X-H1141	male, M12 x 1	, PNP	12 mm,	V2A (1.4301)	Ø 18 x 52 mm	w013	d203
NI12U-MT18-AP6X-H1141	male, M12 x 1	, PNP	12 mm,	CuZn-T	Ø 18 x 52 mm	w013	d224
NI12U-M18-AP6X-H1141	male, M12 x 1	, PNP	12 mm,	CuZn-Cr	Ø 18 x 52 mm	w013	d203
NI15U-M18-RP6X-H1141	male, M12 x 1	, PNP	15 mm,	CuZn-Cr	Ø 18 x 52 mm	w008	d203
NI15U-MT18-AP6X-H1141	male, M12 x 1	, PNP	15 mm,	CuZn-T	Ø 18 x 52 mm	w013	d224
NI15U-M18-AP6X-H1141	male, M12 x 1	, PNP	15 mm,	CuZn-Cr	Ø 18 x 52 mm	w013	d203
NI15U-EM18WD-AP6X-H1141/3GD	male, M12 x 1	, PNP	15 mm,	V4A (1.4404)	Ø 18 x 52 mm	w013	d225
NI15U-EM18WD-AP6X-H1141	male, M12 x 1	, PNP	15 mm,	V4A (1.4404)	Ø 18 x 52 mm	w013	d225
NI12U-M18E-AP6X-H1141	male, M12 x 1	, PNP	12 mm,	CuZn-Cr	Ø 18 x 72 mm	w013	d226
BI8U-M18E-AP6X-H1141	male, M12 x 1	, PNP	8 mm,	CuZn-Cr	Ø 18 x 72 mm	w013	d223
NI14-M18-AP6X-H1141	male, M12 x 1	, PNP	14 mm,	CuZn-Cr	Ø 18 x 52 mm	w013	d203
BI5-G18K-AP6X	2 m cable	, PNP	5 mm,	CuZn-Cr	Ø 18 x 34 mm	w012	d205
BI5U-M18-AP6X	2 m cable	, PNP	5 mm,	CuZn-Cr	Ø 18 x 54 mm	w012	d215
BI8U-M18-AP6X	2 m cable	, PNP	8 mm,	CuZn-Cr	Ø 18 x 54 mm	w012	d215
BI5-M18-AP6X	2 m cable	, PNP	5 mm,	CuZn-Cr	Ø 18 x 54 mm	w012	d215
BI5U-EM18-AP6X	2 m cable	, PNP	5 mm,	V2A (1.4301)	Ø 18 x 54 mm	w012	d215
BI8U-EM18WD-AP6X	2 m cable	, PNP	8 mm,	V4A (1.4404)	Ø 18 x 52 mm	w012	d227
BI5U-S18-AP6X	2 m cable	, PNP	5 mm,	PBT	Ø 18 x 64 mm	w012	d217
NI12U-S18-AP6X	2 m cable	, PNP	12 mm,	PBT	Ø 18 x 64 mm	w012	d217
NI10-G18K-AP6X	2 m cable	, PNP	10 mm,	CuZn-Cr	Ø 18 x 34 mm	w012	d206

Table continues on the next page…

… Table starts on previous page

Type	Connection	Output	Switching distance	Housing material	Dimensions	w	d
NI15U-EM18WD-AP6X	2 m cable	, PNP	15 mm,	V4A (1.4404)	Ø 18 x 52 mm	w012	d228
NI15U-M18-AP6X	2 m cable	, PNP	15 mm,	CuZn-Cr	Ø 18 x 54 mm	w012	d218
NI12U-M18-AP6X	2 m cable	, PNP	12 mm,	CuZn-Cr	Ø 18 x 54 mm	w012	d218
NI12U-EM18-AP6X	2 m cable	, PNP	12 mm,	V2A (1.4301)	Ø 18 x 54 mm	w012	d229
BI8-M18-AP6X	2 m cable	, PNP	8 mm,	CuZn-Cr	Ø 18 x 54 mm	w012	d215
BI8-M18-AP6X 7M	7 m cable	, PNP	8 mm,	CuZn-Cr	Ø 18 x 54 mm	w012	d215
NI15U-EM18WDTC-AP6X	Terminal chamber, Removable cage clamp terminals	, PNP	15 mm,	V4A (1.4404)	Ø 18 x 81 mm	w022	d230
BI5-G18SK-AP6X	Terminal chamber	, PNP	5 mm,	CuZn-Cr	Ø 18 x 77 mm	w022	d231
BI5U-EG18SK-AP6X	Terminal chamber	, PNP	5 mm,	V2A (1.4301)	Ø 18 x 77 mm	w022	d231
BI5U-P18SK-AP6X	Terminal chamber	, PNP	5 mm,	PBT	Ø 18 x 77 mm	w022	d232
NI12U-P18SK-AP6X	Terminal chamber	, PNP	12 mm,	PBT	Ø 18 x 77 mm	w022	d232
BI5-P18SK-AP6X	Terminal chamber	, PNP	5 mm,	PA	Ø 18 x 77 mm	w022	d232
NI10-P18SK-AP6X	Terminal chamber	, PNP	10 mm,	PA	Ø 18 x 77 mm	w022	d232
BI8U-EM18WDTC-AP6X	Terminal chamber, Removable cage clamp terminals	, PNP	8 mm,	V4A (1.4404)	Ø 18 x 81 mm	w022	d233
NI10-G18SK-AP6X	Terminal chamber	, PNP	10 mm,	CuZn-Cr	Ø 18 x 77 mm	w022	d234
NI12U-EG18SK-AP6X	Terminal chamber	, PNP	12 mm,	V2A (1.4301)	Ø 18 x 77 mm	w022	d234

Many different types available, also as NPN version, see type code

M18 – 4-wire DC

General data

Output , PNP **Housing material** CuZn-Cr

Types and data – selection table

Type	Connection	Operating voltage	Switching distance	Dimensions	w	d
BI8U-M18M-VP44X-H1141	male, M12 x 1	10…55 VDC	8 mm,	Ø 18 x 61.5 mm	w035	d212
NI15U-M18M-VP44X-H1141	male, M12 x 1	10…55 VDC	15 mm,	Ø 18 x 61.5 mm	w035	d213
NI14-M18-VP6X-H1141	male, M12 x 1	10…30 VDC	14 mm,	Ø 18 x 52 mm	w005	d203
BI8-M18-VP6X-H1141	male, M12 x 1	10…30 VDC	8 mm,	Ø 18 x 52 mm	w005	d202
BI8U-M18M-VP44X	2 m cable	10…55 VDC	8 mm,	Ø 18 x 64 mm	w010	d235
NI15U-M18M-VP44X	2 m cable	10…55 VDC	15 mm,	Ø 18 x 64 mm	w010	d216
NI14-M18-VP6X 7M	7 m cable	10…30 VDC	14 mm,	Ø 18 x 54 mm	w010	d218
BI8-M18-VP6X 7M	7 m cable	10…30 VDC	8 mm,	Ø 18 x 54 mm	w010	d215
BI8-M18-VP6X	2 m cable	10…30 VDC	8 mm,	Ø 18 x 54 mm	w010	d215

Many different types available, also as NPN version, see type code

w Wiring diagrams on page 658 d Dimension drawing on page 670 Accessories on page 560

M18 – 2-wire AC/DC

General data

Operating voltage 20…250 VAC / 10…300 VDC **Output**

Types and data – selection table

Type	Connection	Switching distance	Housing material	Dimensions	w	d
BI5-M18-AZ3X	2 m cable	5 mm,	CuZn-Cr	Ø 18 x 64 mm	w028	d235
BI5U-M18-ADZ30X2	2 m cable	5 mm,	CuZn-Cr	Ø 18 x 64 mm	w028	d236
NI8-P18-AZ3/S139-S90	2 m cable	8 mm,	POM	Ø 18 x 80 mm	w028	d237
BI5-P18-AZ3/S139-S90	2 m cable	5 mm,	POM	Ø 18 x 80 mm	w028	d237
BI5-S18-AZ3X	2 m cable	5 mm,	PA	Ø 18 x 64 mm	w028	d217
NI8-S18-AZ3X	2 m cable	8 mm,	PA	Ø 18 x 64 mm	w028	d217
NI12U-M18-ADZ30X2	2 m cable	12 mm,	CuZn-Cr	Ø 18 x 65 mm	w028	d238
NI8-M18-AZ3X	2 m cable	8 mm,	CuZn-Cr	Ø 18 x 64 mm	w033	d216
BI5U-G18-ADZ30X2-B1331	male, 7/8"	5 mm,	CuZn-Cr	Ø 18 x 82 mm	w027	d239
NI12U-G18-ADZ30X2-B1331	male, 7/8"	12 mm,	CuZn-Cr	Ø 18 x 82 mm	w027	d240
BI5U-G18-ADZ30X2-B3331	male, 1/2"	5 mm,	CuZn-Cr	Ø 18 x 82 mm	w027	d241
NI12U-G18-ADZ30X2-B3331	male, 1/2"	12 mm,	CuZn-Cr	Ø 18 x 82 mm	w027	d242

M30 – NAMUR

General data

Operating voltage 8.2 VDC **Output** NAMUR

Types and data – selection table

Type	Connection	Switching distance	Housing material	Dimensions	w	d
BI10-EM30-Y1X-H1141	male, M12 x 1	10 mm,	V2A (1.4301)	Ø 30 x 62 mm	w017	d243
BI10-M30-Y1X-H1141	male, M12 x 1	10 mm,	CuZn-Cr	Ø 30 x 62 mm	w017	d243
NI15-EM30-Y1X-H1141	male, M12 x 1	15 mm,	V2A (1.4301)	Ø 30 x 62 mm	w017	d244
NI15-M30-Y1X-H1141	male, M12 x 1	15 mm,	CuZn-Cr	Ø 30 x 62 mm	w017	d244
BI10-P30-Y1X	2 m cable	10 mm,	PA	Ø 30 x 44 mm	w014	d245
NI15-P30-Y1X	2 m cable	15 mm,	PA	Ø 30 x 44 mm	w014	d245
BI10-G30-Y1X	2 m cable	10 mm,	CuZn-Cr	Ø 30 x 44 mm	w014	d246

Table continues on the next page…

… Table starts on previous page

Type	Connection	Switching distance	Housing material	Dimensions	w	d
NI15-G30-Y1X	2 m cable	15 mm,	CuZn-Cr	Ø 30 x 44 mm	w014	d247
BI10-P30SK-Y1X	Terminal chamber	10 mm,	PA	Ø 30 x 72 mm	w025	d248
NI15-P30SK-Y1X	Terminal chamber	15 mm,	PA	Ø 30 x 72 mm	w025	d248
BI10-EG30SK-Y1X	Terminal chamber	10 mm,	V2A (1.4301)	Ø 30 x 72 mm	w025	d249
BI10-G30SK-Y1X	Terminal chamber	10 mm,	CuZn-Cr	Ø 30 x 72 mm	w025	d249
NI15-EG30SK-Y1X	Terminal chamber	15 mm,	V2A (1.4301)	Ø 30 x 72 mm	w025	d250
NI15-G30SK-Y1X	Terminal chamber	15 mm,	CuZn-Cr	Ø 30 x 72 mm	w025	d250
BI10-EM30WDTC-Y1X	Terminal chamber, Removable cage clamp terminals	10 mm,	V4A (1.4404)	Ø 30 x 80 mm	w025	d251
NI15-EM30WDTC-Y1X	Terminal chamber, Removable cage clamp terminals	15 mm,	V4A (1.4404)	Ø 30 x 80 mm	w025	d252

M30 – 2-wire DC

General data

Operating voltage 10…65 VDC **Output** , 2-wire

Types and data – selection table

Type	Connection	Switching distance	Housing material	Dimensions	w	d
BI10-M30-AD4X-H1141	male, M12 x 1	10 mm,	CuZn-Cr	Ø 30 x 62 mm	w021	d243
BI10U-M30-AD4X-H1144	male, M12 x 1	10 mm,	CuZn-Cr	Ø 30 x 62 mm	w018	d243
BI10U-MT30-AD4X-H1144	male, M12 x 1	10 mm,	CuZn-T	Ø 30 x 62 mm	w018	d064
NI15-M30-AD4X-H1141	male, M12 x 1	15 mm,	CuZn-Cr	Ø 30 x 62 mm	w021	d244
NI15U-M30-AD4X-H1144	male, M12 x 1	15 mm,	CuZn-Cr	Ø 30 x 62 mm	w018	d244
NI15U-MT30-AD4X-H1144	male, M12 x 1	15 mm,	CuZn-T	Ø 30 x 62 mm	w018	d253
NI20-M30-AD4X-H1141	male, M12 x 1	20 mm,	CuZn-Cr	Ø 30 x 62 mm	w021	d244
BI12-G30K-AD4X	2 m cable	12 mm,	CuZn-Cr	Ø 30 x 44 mm	w034	d246
BI10-S30-AD4X	2 m cable	10 mm,	PA	Ø 30 x 64 mm	w034	d254
NI15-S30-AD4X	2 m cable	15 mm,	PA	Ø 30 x 64 mm	w034	d254
BI10-M30-AD4X	2 m cable	10 mm,	CuZn-Cr	Ø 30 x 64 mm	w034	d255
BI10U-M30-AD4X	2 m cable	10 mm,	CuZn-Cr	Ø 30 x 64 mm	w034	d255
NI20-G30K-AD4X	2 m cable	20 mm,	CuZn-Cr	Ø 30 x 44 mm	w034	d247
NI15-M30-AD4X	2 m cable	15 mm,	CuZn-Cr	Ø 30 x 64 mm	w034	d256
NI20-M30-AD4X	2 m cable	20 mm,	CuZn-Cr	Ø 30 x 64 mm	w034	d256
NI15U-M30-AD4X	2 m cable	15 mm,	CuZn-Cr	Ø 30 x 64 mm	w034	d256

w Wiring diagrams on page 658 d Dimension drawing on page 670 Accessories on page 560

M30 – 3-wire DC

General data

Operating voltage 10…30 VDC

Types and data – selection table

Type	Connection	Output	Switching distance	Housing material	Dimensions	w	d
Bi15U-M30-RP6X-H1141	male, M12 x 1	, PNP	15 mm,	CuZn-Cr	Ø 30 x 62 mm	w008	d243
BI15U-M30-AP6X-H1141	male, M12 x 1	, PNP	15 mm,	CuZn-Cr	Ø 30 x 62 mm	w013	d243
BI15U-MT30-AP6X-H1141	male, M12 x 1	, PNP	15 mm,	CuZn-T	Ø 30 x 62 mm	w013	d064
BI15U-EM30WD-AP6X-H1141	male, M12 x 1	, PNP	15 mm,	V4A (1.4404)	Ø 30 x 62 mm	w013	d243
BI15U-EM30WD-AP6X-H1141/3GD	male, M12 x 1	, PNP	15 mm,	V4A (1.4404)	Ø 30 x 62 mm	w013	d243
BI10-M30-AP6X-H1141	male, M12 x 1	, PNP	10 mm,	CuZn-Cr	Ø 30 x 62 mm	w013	d243
BI10U-M30-AP6X-H1141	male, M12 x 1	, PNP	10 mm,	CuZn-Cr	Ø 30 x 62 mm	w013	d243
BI10U-EM30-AP6X-H1141	male, M12 x 1	, PNP	10 mm,	V2A (1.4301)	Ø 30 x 62 mm	w013	d243
BI10U-MT30-AP6X-H1141	male, M12 x 1	, PNP	10 mm,	CuZn-T	Ø 30 x 62 mm	w013	d064
BI15-M30-AP6X-H1141	male, M12 x 1	, PNP	15 mm,	CuZn-Cr	Ø 30 x 62 mm	w013	d243
BI10U-S30-AP6X-H1141	male, M12 x 1	, PNP	10 mm,	PBT	Ø 30 x 62 mm	w013	d257
NI20U-S30-AP6X-H1141	male, M12 x 1	, PNP	20 mm,	PBT	Ø 30 x 62 mm	w013	d257
NI30U-M30-RP6X-H1141	male, M12 x 1	, PNP	30 mm,	CuZn-Cr	Ø 30 x 62 mm	w008	d244
NI30U-M30-AP6X-H1141	male, M12 x 1	, PNP	30 mm,	CuZn-Cr	Ø 30 x 62 mm	w013	d244
NI30U-MT30-AP6X-H1141	male, M12 x 1	, PNP	30 mm,	CuZn-T	Ø 30 x 62 mm	w013	d253
NI30U-EM30WD-AP6X-H1141/3GD	male, M12 x 1	, PNP	30 mm,	V4A (1.4404)	Ø 30 x 62 mm	w013	d258
NI20U-M30-AP6X-H1141	male, M12 x 1	, PNP	20 mm,	CuZn-Cr	Ø 30 x 62 mm	w013	d244
NI20U-EM30-AP6X-H1141	male, M12 x 1	, PNP	20 mm,	V2A (1.4301)	Ø 30 x 62 mm	w013	d244
NI20U-MT30-AP6X-H1141	male, M12 x 1	, PNP	20 mm,	CuZn-T	Ø 30 x 62 mm	w013	d253
NI20-M30-AP6X-H1141	male, M12 x 1	, PNP	20 mm,	CuZn-Cr	Ø 30 x 62 mm	w013	d244
BI10-G30K-AP6X	2 m cable	, PNP	10 mm,	CuZn-Cr	Ø 30 x 44 mm	w012	d246
BI10U-S30-AP6X	2 m cable	, PNP	10 mm,	PA	Ø 30 x 64 mm	w012	d254
NI20U-S30-AP6X	2 m cable	, PNP	20 mm,	PA	Ø 30 x 64 mm	w012	d254
BI15U-M30-AP6X	2 m cable	, PNP	15 mm,	CuZn-Cr	Ø 30 x 64 mm	w012	d255
BI10-M30-AP6X	2 m cable	, PNP	10 mm,	CuZn-Cr	Ø 30 x 64 mm	w012	d255
BI10U-EM30-AP6X	2 m cable	, PNP	10 mm,	V2A (1.4301)	Ø 30 x 64 mm	w012	d255
BI10U-M30-AP6X	2 m cable	, PNP	10 mm,	CuZn-Cr	Ø 30 x 64 mm	w012	d259
BI15U-EM30WD-AP6X	2 m cable	, PNP	15 mm,	V4A (1.4404)	Ø 30 x 66 mm	w012	d260
NI30U-M30-AP6X	2 m cable	, PNP	30 mm,	CuZn-Cr	Ø 30 x 64 mm	w012	d256
NI20U-M30-AP6X	2 m cable	, PNP	20 mm,	CuZn-Cr	Ø 30 x 64 mm	w012	d256
NI20U-EM30-AP6X	2 m cable	, PNP	20 mm,	V2A (1.4301)	Ø 30 x 64 mm	w012	d256
BI15-M30-AP6X	2 m cable	, PNP	15 mm,	CuZn-Cr	Ø 30 x 64 mm	w012	d255
BI15-M30-AP6X 7M	7 m cable	, PNP	15 mm,	CuZn-Cr	Ø 30 x 64 mm	w012	d255
BI10-G30SK-AP6X	Terminal chamber	, PNP	10 mm,	CuZn-Cr	Ø 30 x 87 mm	w022	d261
BI10U-EG30SK-AP6X	Terminal chamber	, PNP	10 mm,	V2A (1.4301)	Ø 30 x 87 mm	w022	d261
NI20U-EG30SK-AP6X	Terminal chamber	, PNP	20 mm,	V2A (1.4301)	Ø 30 x 87 mm	w022	d262
BI10-P30SK-AP6X	Terminal chamber	, PNP	10 mm,	PA	Ø 30 x 87 mm	w022	d263

Table continues on the next page…

… Table starts on previous page

Type	Connection	Output	Switching distance	Housing material	Dimensions	w	d
BI10U-P30SK-AP6X	Terminal chamber	, PNP	10 mm,	PA	Ø 30 x 87 mm	w022	d263
NI15-P30SK-AP6X	Terminal chamber	, PNP	15 mm,	PA	Ø 30 x 87 mm	w022	d263
NI20U-P30SK-AP6X	Terminal chamber	, PNP	20 mm,	PA	Ø 30 x 87 mm	w022	d263
BI15U-EM30WDTC-AP6X	Terminal chamber, Removable cage clamp terminals	, PNP	15 mm,	V4A (1.4404)	Ø 30 x 95 mm	w022	d264
BI10-P30SR-AP6X	Terminal chamber	, PNP	10 mm,	ABS	Ø 30 x 115 mm	w022	d265
NI15-P30SR-AP6X	Terminal chamber	, PNP	15 mm,	ABS	Ø 30 x 115 mm	w022	d265
NI15-G30SK-AP6X	Terminal chamber	, PNP	15 mm,	CuZn-Cr	Ø 30 x 87 mm	w022	d262
NI30U-EM30WDTC-AP6X	Terminal chamber, Removable cage clamp terminals	, PNP	30 mm,	V4A (1.4404)	Ø 30 x 95 mm	w022	d266

Many different types available, also as NPN version, see type code

M30 – 4-wire DC

General data

Output , PNP **Housing material** CuZn-Cr

Types and data – selection table

Type	Connection	Operating voltage	Switching distance	Dimensions	w	d
BI15U-M30-VP44X-H1141	male, M12 x 1	10…55 VDC	15 mm,	Ø 30 x 62 mm	w035	d243
NI30U-M30-VP44X-H1141	male, M12 x 1	10…55 VDC	30 mm,	Ø 30 x 62 mm	w035	d244
NI20-M30-VP6X-H1141	male, M12 x 1	10…30 VDC	20 mm,	Ø 30 x 62 mm	w005	d244
BI15-M30-VP6X-H1141	male, M12 x 1	10…30 VDC	15 mm,	Ø 30 x 62 mm	w005	d243
BI15U-M30-VP44X	2 m cable	10…55 VDC	15 mm,	Ø 30 x 64 mm	w010	d255
NI30U-M30-VP44X	2 m cable	10…55 VDC	30 mm,	Ø 30 x 64 mm	w010	d256
NI20-M30-VP6X 7M	7 m cable	10…30 VDC	20 mm,	Ø 30 x 64 mm	w010	d256
BI15-M30-VP6X 7M	7 m cable	10…30 VDC	15 mm,	Ø 30 x 64 mm	w010	d255
BI15-M30-VP6X	2 m cable	10…30 VDC	15 mm,	Ø 30 x 64 mm	w010	d255

Many different types available, also as NPN version, see type code

w Wiring diagrams on page 658 d Dimension drawing on page 670 Accessories on page 560

M30 – 2-wire AC/DC

General data

Operating voltage 20…250 VAC / 10…300 VDC

Types and data – selection table

Type	Connection	Output	Switching distance	Housing material	Dimensions	w	d
BI10-S30-AZ3X	2 m cable		10 mm,	PA	Ø 30 x 64 mm	w028	d254
NI15-S30-AZ3X	2 m cable		15 mm,	PA	Ø 30 x 64 mm	w028	d254
BI10-M30-AZ3X	2 m cable		10 mm,	CuZn-Cr	Ø 30 x 64 mm	w033	d255
BI10U-M30-ADZ30X2	2 m cable		10 mm,	CuZn-Cr	Ø 30 x 64 mm	w028	d267
NI15-M30-AZ3X	2 m cable		15 mm,	CuZn-Cr	Ø 30 x 64 mm	w033	d256
NI20U-M30-ADZ30X2	2 m cable		20 mm,	CuZn-Cr	Ø 30 x 64 mm	w028	d268
BI10-P30SR-FZ3X2	Terminal chamber	,	10 mm,	ABS	Ø 30 x 115 mm	w024	d269
NI15-P30SR-FZ3X2	Terminal chamber	,	15 mm,	ABS	Ø 30 x 115 mm	w024	d269
BI10U-G30-ADZ30X2-B1131	male, 7/8"		10 mm,	CuZn-Cr	Ø 30 x 80 mm	w027	d270
NI20U-G30-ADZ30X2-B1131	male, 7/8"		20 mm,	CuZn-Cr	Ø 30 x 80 mm	w027	d271
BI10U-G30-ADZ30X2-B3131	male, 1/2"		10 mm,	CuZn-Cr	Ø 30 x 80 mm	w027	d272
NI20U-G30-ADZ30X2-B3131	male, 1/2"		20 mm,	CuZn-Cr	Ø 30 x 80 mm	w027	d273

G47

General data

Housing material CuZn-Cr

Types and data – selection table

Type	Connection	Operating voltage	Output	Switching distance	Dimensions	w	d
BI20-G47-Y1X	2 m cable	8.2 VDC	NAMUR	20 mm,	Ø 47 x 70 mm	w014	d274
BI20-G47-AP4X	2 m cable	10…65 VDC	, PNP	20 mm,	Ø 47 x 70 mm	w012	d274
NI25-G47-AP4X	2 m cable	10…65 VDC	, PNP	25 mm,	Ø 47 x 70 mm	w012	d275
BI25-G47SR-VP4X2	Terminal chamber	10…65 VDC	, PNP	25 mm,	Ø 47 x 96 mm	w023	d276
NI40-G47SR-VP4X2	Terminal chamber	10…65 VDC	, PNP	40 mm,	Ø 47 x 106 mm	w023	d277
BI20-G47-AZ3X	2 m cable	20…250 VAC / 10…300 VDC		20 mm,	Ø 47 x 70 mm	w028	d274
NI25-G47-AZ3X	2 m cable	20…250 VAC / 10…300 VDC		25 mm,	Ø 47 x 70 mm	w028	d275

Table continues on the next page…

… Table starts on previous page

Type	Connection	Operating voltage	Output	Switching distance	Dimensions	w	d
BI25-G47SR-FZ3X2	Terminal chamber	20…250 VAC / 10…300 VDC	,	25 mm,	Ø 47 x 96 mm	w024	d276
NI40-G47SR-FZ3X2	Terminal chamber	20…250 VAC / 10…300 VDC	,	40 mm,	Ø 47 x 106 mm	w024	d277

Many different types available, also as NPN version, see type code

w Wiring diagrams on page 658 d Dimension drawing on page 670 Accessories on page 560

Cylindrical designs – Smooth barrel

No matter if you choose a compact Ø 3 mm or a rugged Ø 40 mm version: The smooth barrels from TURCK are available with different switching distances, many connection possibilities and high protection rating. All these features are required as a standard in industrial automation.

Features

- Cables, connector or terminal chamber
- Mounting bracket included in delivery
- Electrical versions NAMUR, DC and AC/DC
- Stainless steel and plastic housings

Properties

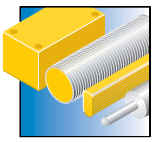

Designs
Ø 3 mm for confined spaces up to Ø 40 mm

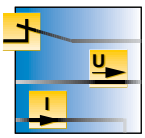

Electrical versions
NAMUR, 2, 3 and 4-wire DC, 2-wire AC/DC

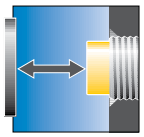

Switching distances
Large switching distances, optionally with factor 1, without reduction factor

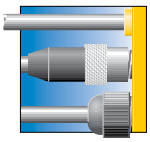

Electrical connections
Cable, terminal chamber, M8 and M12 connectors

Materials
Stainless steel sensors up to Ø 6.5 mm diameter, bigger sizes in PA or PBT

Special features
Ø 4 mm, Ø 6.5 mm, with lateral active face, integrated rotation speed monitoring

Internet link
Scan the QR code to access our products on the internet

Hans Turck GmbH & Co. KG ▪ Tel. +49 208 49 52-0 ▪ Fax +49 208 49 52-264

Ø 3 mm

General data

Connection	2 m cable	**Operating voltage**	10…30 VDC
Output	__, PNP	**Switching distance**	1 mm,
Housing material	V2A (1.4301)	**Dimensions**	Ø 3 x 27 mm

Types and data – selection table

Type	w	d
BI1-EH03-AP7X	w012	d278

Many different types available, also as NPN version, see type code

Ø 4 mm

General data

Switching distance	1 mm,

Types and data – selection table

Type	Connection	Operating voltage	Output	Housing material	Dimensions	w	d
BI1-EH04-Y1	2 m cable	8.2 VDC	NAMUR	V4A (1.4404)	Ø 4 x 30 mm	w014	d279
BI1-HS540-Y1	2 m cable	8.2 VDC	NAMUR	V2A (1.4301)	Ø 4 x 30 mm	w014	d280
BI1-EH04-AP6X-V1331	male, M8 x 1	10…30 VDC	__, PNP	V4A (1.4404)	Ø 4 x 42.5 mm	w013	d281
BI1-EH04-RP6X-V1331	male, M8 x 1	10…30 VDC	__, PNP	V4A (1.4404)	Ø 4 x 42.5 mm	w029	d281
BI1-EH04-AP6X	2 m cable	10…30 VDC	__, PNP	V4A (1.4404)	Ø 4 x 30 mm	w012	d282
BI1-EH04-RP6X	2 m cable	10…30 VDC	__, PNP	V4A (1.4404)	Ø 4 x 30 mm	w030	d282
BI1-HS540-RP6X	2 m cable	10…30 VDC	__, PNP	V2A (1.4301)	Ø 4 x 30 mm	w030	d283
BI1-HS540-AP6X	2 m cable	10…30 VDC	__, PNP	V2A (1.4301)	Ø 4 x 30 mm	w012	d283

Many different types available, also as NPN version, see type code

w Wiring diagrams on page 658 d Dimension drawing on page 670 Accessories on page 560

Ø 6.5 mm – NAMUR

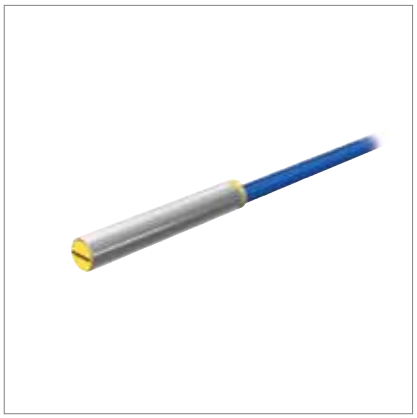

General data

Connection	2 m cable	**Operating voltage**	8.2 VDC
Output	NAMUR		

Types and data – selection table

Type	Switching distance	Housing material	Dimensions	w	d
BI1,5-EH6,5K-Y1	1.5 mm,	V4A (1.4404)	Ø 6.5 x 23.6 mm	w014	d284
BI1,5-HS865-Y1	1.5 mm,	CuZn-Cr	Ø 6.5 x 32 mm	w014	d285
NI3-EH6,5K-Y1	3 mm,	V4A (1.4404)	Ø 6.5 x 23.6 mm	w014	d286

Ø 6.5 mm – 3-wire DC

General data

Operating voltage	10…30 VDC

Types and data – selection table

Type	Connection	Output	Switching distance	Housing material	Dimensions	w	d
BI1,5-EH6,5K-AP6X-V1131	male, M8 x 1	, PNP	1.5 mm,	V4A (1.4404)	Ø 6.5 x 31 mm	w013	d287
BI2-EH6,5K-AP6X-V1131	male, M8 x 1	, PNP	2 mm,	V4A (1.4404)	Ø 6.5 x 31 mm	w013	d287
BI2-EH6,5K-RP6X-V1131	male, M8 x 1	, PNP	2 mm,	V4A (1.4404)	Ø 6.5 x 31 mm	w029	d287
BI2U-EH6,5-AP6X-V1131	male, M8 x 1	, PNP	2 mm,	V2A (1.4301)	Ø 6.5 x 49 mm	w013	d288
BI2U-EH6,5-RP6X-V1131	male, M8 x 1	, PNP	2 mm,	V2A (1.4301)	Ø 6.5 x 49 mm	w029	d288
BI1,5-EH6,5-AP6X-V1131	male, M8 x 1	, PNP	1.5 mm,	V2A (1.4301)	Ø 6.5 x 49 mm	w013	d288
BI2-EH6,5-AP6X-V1131	male, M8 x 1	, PNP	2 mm,	V2A (1.4301)	Ø 6.5 x 49 mm	w013	d288
NI3-EH6,5K-AP6X-V1131	male, M8 x 1	, PNP	3 mm,	V4A (1.4404)	Ø 6.5 x 31 mm	w013	d289
NI6U-EH6,5-AP6X-V1131	male, M8 x 1	, PNP	6 mm,	V2A (1.4301)	Ø 6.5 x 49 mm	w013	d290
NI6U-EH6,5-RP6X-V1131	male, M8 x 1	, PNP	6 mm,	V2A (1.4301)	Ø 6.5 x 49 mm	w029	d290
NI3-EH6,5-AP6X-V1131	male, M8 x 1	, PNP	3 mm,	V2A (1.4301)	Ø 6.5 x 49 mm	w013	d290
BI1,5-EH6,5K-AP6X	2 m cable	, PNP	1.5 mm,	V4A (1.4404)	Ø 6.5 x 23.6 mm	w012	d291
BI2-EH6,5K-RP6X	2 m cable	, PNP	2 mm,	V4A (1.4404)	Ø 6.5 x 23.6 mm	w030	d291
BI2-EH6,5K-AP6X	2 m cable	, PNP	2 mm,	V4A (1.4404)	Ø 6.5 x 23.6 mm	w012	d291
BI1,5-HS865-AP6X	2 m cable	, PNP	1.5 mm,	CuZn-Cr	Ø 6.5 x 32 mm	w012	d285
BI2U-EH6,5-AP6X	2 m cable	, PNP	2 mm,	V2A (1.4301)	Ø 6.5 x 42 mm	w012	d292

Table continues on the next page…

… Table starts on previous page

Type	Connection	Output	Switching distance	Housing material	Dimensions	w	d
BI2-EH6,5-AP6X	2 m cable	, PNP	2 mm,	V2A (1.4301)	Ø 6.5 x 42 mm	w012	d292
BI2U-EH6,5-RP6X	2 m cable	, PNP	2 mm,	V2A (1.4301)	Ø 6.5 x 42 mm	w030	d292
NI3-EH6,5K-AP6X	2 m cable	, PNP	3 mm,	V4A (1.4404)	Ø 6.5 x 23.6 mm	w012	d293
NI3-EH6,5-AP6X	2 m cable	, PNP	3 mm,	V2A (1.4301)	Ø 6.5 x 42 mm	w012	d294
NI6U-EH6,5-AP6X	2 m cable	, PNP	6 mm,	V2A (1.4301)	Ø 6.5 x 42 mm	w012	d294

Many different types available, also as NPN version, see type code

Ø 11 mm

General data

Housing material PA

Fixing clamp BS11 included in delivery

Types and data – selection table

Type	Connection	Operating voltage	Output	Switching distance	Dimensions	w	d
NI5-K11-Y1	2 m cable	8.2 VDC	NAMUR	5 mm,	Ø 11 x 34 mm	w014	d295
BI2-K11-Y1	2 m cable	8.2 VDC	NAMUR	2 mm,	Ø 11 x 34 mm	w014	d295
BI2-K11-AP6X	2 m cable	10…30 VDC	, PNP	2 mm,	Ø 11 x 54 mm	w012	d296
NI5-K11-AP6X	2 m cable	10…30 VDC	, PNP	5 mm,	Ø 11 x 54 mm	w012	d296
BI2-K11SK-AP6X	Terminal chamber	10…30 VDC	, PNP	2 mm,	Ø 11 x 75 mm	w022	d297
NI5-K11SK-AP6X	Terminal chamber	10…30 VDC	, PNP	5 mm,	Ø 11 x 75 mm	w022	d297

w Wiring diagrams on page 658 d Dimension drawing on page 670 Accessories on page 560

Ø 20 mm

General data

Switching distance	10 mm,	**Housing material**	PBT

Fixing clamp BS20 included in delivery

Types and data – selection table

Type	Connection	Operating voltage	Output	Dimensions	w	d
NI10-K20-AP6X	2 m cable	10…30 VDC	, PNP	Ø 20 x 54 mm	w012	d298
NI10-K20SK-AP6X	Terminal chamber	10…30 VDC	, PNP	Ø 20 x 77 mm	w022	d299
NI10-K20-AZ3X	2 m cable	20…250 VAC / 10…300 VDC		Ø 20 x 79 mm	w028	d300
NI10-K20SK-AZ3X	Terminal chamber	20…250 VAC / 10…300 VDC		Ø 20 x 77 mm	w037	d299

Many different types available, also as NPN version, see type code

Ø 34 mm

General data

Operating voltage	10…65 VDC	**Output**	, PNP
Switching distance	20 mm,	**Housing material**	PBT

Fixing clamp BS34.1 included in delivery

Types and data – selection table

Type	Connection	Dimensions	w	d
NI20-K34-VP4X	2 m cable	Ø 34 x 80 mm	w010	d301
NI20-K34SR-VP4X2	Terminal chamber	Ø 34 x 106 mm	w023	d302

Ø 40 mm

General data

Connection	Terminal chamber	**Housing material**	ABS
Dimensions	Ø 40 x 90 mm		

Fixing clamp BS40 included in delivery

Types and data – selection table

Type	Operating voltage	Output	Switching distance	w	d
NI20-K40SR-VP4X2	10…65 VDC	, PNP	20 mm,	w023	d303
NI30-K40SR-VP4X2	10…65 VDC	, PNP	30 mm,	w023	d303
NI30-K40SR-FZ3X2	20…250 VAC / 10…300 VDC	,	30 mm,	w024	d303
NI20-K40SR-FZ3X2	20…250 VAC / 10…300 VDC	,	20 mm,	w024	d303

Many different types available, also as NPN version, see type code

w Wiring diagrams on page 658 d Dimension drawing on page 670 Accessories on page 560

Ring sensors

TURCK ring sensors are compact and universally mountable. They are used in many different systems such as in assembly lines or component feeding systems where they detect small and fast moving metal parts reliably and quickly. The *uprox*®+ Factor 1 sensors of the TS12 series are used in feeding systems composed by hoses with different diameters. The TS12 can therefore be used as an innovative replacement for ring sensors.

Features

- Ring diameter 6…100 mm
- Static, dynamic and analog versions
- Integrated amplifier or separate probe-amplifier combination
- High sensitivity, adjustable, up to Ø 0.1 mm wire diameter
- Compact design
- The innovative TS12 *uprox*®+ factor 1 series

Properties

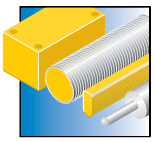

Designs
From the compact rectangular Q14 to the proven S32

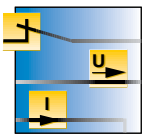

Electrical versions
3-wire NO or antivalent PNP/NPN; static, dynamic or analog output

Measuring ranges
Ring diameters of Ø 6…100 mm detect steel balls from Ø 0.6 mm as well as wires Ø 0.4 mm and bigger

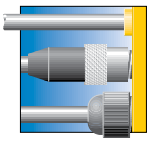

Electrical connections
Connection cable, 2 m; male M8 x 1, M12 x 1

Materials
Plastic housing in PBT, PA, ABS and POM

Special features
Versions with separate ring and amplifier; S32XL ring diameter Ø 100 mm

Internet link
Scan the QR code to access our products on the internet

TS12

General data

Connection	male, M8 x 1	**Operating voltage**	10…30 VDC
Output	__, PNP	**Housing material**	PBT
Dimensions	17 x 12 x 80 mm		

Can be used as a universal replacement for ring sensors
For small parts detection

Types and data – selection table

Type	w	d
NI20U-TS12-AP6X2-V1131	w013	d304

Many different types available, also as NPN version, see type code

Q14– Switching output

General data

Connection	male, M12 x 1	**Operating voltage**	10…30 VDC
Output	__, PNP	**Housing material**	PBT
Dimensions	30 x 14 x 62.5 mm		

Tailback detection

Types and data – selection table

Type	Inside ring diameter D	w	d
BI20R-Q14-AP6X2-H1141	20.1 mm	w013	d305
BI15R-Q14-AP6X2-H1141	15.1 mm	w013	d306
BI10R-Q14-AP6X2-H1141	10.1 mm	w013	d307
BI6R-Q14-AP6X2-H1141	6.1 mm	w013	d308

Many different types available, also as NPN version, see type code

w Wiring diagrams on page 658 d Dimension drawing on page 670 Accessories on page 560

Q14 - Voltage output

General data

Inside ring diameter D	20.1 mm	**Connection**	male, M12 x 1
Operating voltage	15…30 VDC	**Output**	Analog output, 0…10 V
Housing material	PBT	**Dimensions**	30 x 14 x 62.5 mm

Tailback detection

Types and data – selection table

Type	w	d
BI20R-Q14-LU-H1141	w038	d309

Q20

General data

Inside ring diameter D	30.1 mm	**Connection**	male, M12 x 1
Operating voltage	10…30 VDC	**Output**	⎽╲⎽, PNP
Housing material	PBT	**Dimensions**	40 x 20 x 68 mm

Tailback detection

Types and data – selection table

Type	w	d
BI30R-Q20-AP6X2-H1141	w013	d310

Many different types available, also as NPN version, see type code

W30

General data

Connection	male, M12 x 1	**Operating voltage**	10…30 VDC
Output	_⟋‾, PNP	**Housing material**	PA
Dimensions	35 x 30 x 60 mm		

Dynamic output behaviour
For the detection of small and fast moving parts

Types and data – selection table

Type	Inside ring diameter D	w	d
BI30R-W30-DAP6X-H1141	30.1 mm	w013	d311
BI20R-W30-DAP6X-H1141	20.1 mm	w013	d312
BI15R-W30-DAP6X-H1141	15.1 mm	w013	d313
BI10R-W30-DAP6X-H1141	10.1 mm	w013	d314
BI6R-W30-DAP6X-H1141	6.1 mm	w013	d315

Many different types available, also as NPN version, see type code

Q80

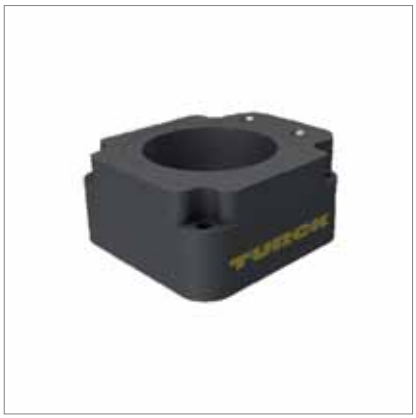

General data

Connection	male, M12 x 1	**Operating voltage**	10…30 VDC
Output	_⟋‾, PNP	**Housing material**	PBT
Dimensions	80 x 40 x 92 mm		

Tailback detection

Types and data – selection table

Type	Inside ring diameter D	w	d
BI65R-Q80-AP6X2-H1141	65 mm	w013	d316
BI50R-Q80-AP6X2-H1141	50 mm	w013	d317

w Wiring diagrams on page 658 d Dimension drawing on page 670 Accessories on page 560

S32SR

General data

Connection	Terminal chamber	**Operating voltage**	10…55 VDC
Output	⊓⊔, PNP	**Housing material**	ABS
Dimensions	100 x 32 x 175 mm		

Tailback detection

Types and data – selection table

Type	Inside ring diameter D	Steel wire diameter (St37)	w	d
NI65R-S32SR-VP44X	65 mm	2 mm	w023	d318
NI40R-S32SR-VP44X	40 mm	1 mm	w023	d319
NI20R-S32SR-VP44X	20 mm	0.4 mm	w023	d320

S32XL

General data

Inside ring diameter D	100 mm	**Connection**	male, M12 x 1
Operating voltage	10…55 VDC	**Output**	⊓⊔, PNP
Housing material	POM	**Dimensions**	137.5 x 32 x 180 mm
Steel wire diameter (St37)	4 mm		

Tailback detection

Types and data – selection table

Type	w	d
NI100R-S32XL-VP44X-H1141	w035	d321

Wiring diagrams on page 658 Dimension drawing on page 670 Accessories on page 560

Slot sensors

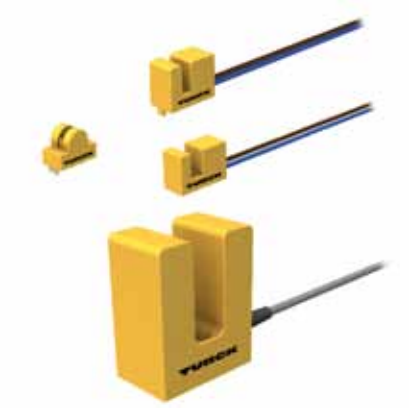

The slot sensors are U-shaped and the active face is located between the two arms. The sensor is activated when an object passes through the slot. Slot sensors detect laterally approaching targets reliably, regardless of their distance to the active face.
Slot sensors are thus applicable as limit value detectors on analog pointer instruments or on trailing chain capable conveyor systems, on which the positioning element may move due to the chain tolerance.

Features

- Sloth width 2 …15 mm
- Compact design for confined spaces
- High repeatability
- All designs available with NAMUR output (incl. SIL2)
- Robust plastic housings

Properties

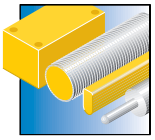

Designs
From the K08 for confined spaces to the K30 with large slot width

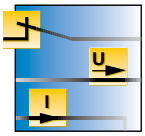

Electrical versions
3 and 4-wire DC; NAMUR

Measuring ranges
Slot widths 2 …15 mm

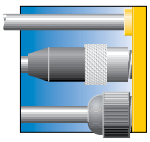

Electrical connections
Strands, 0.5 m or connection cable, 2 m

Materials
PA or PBT housings

Special features
ATEX approved and SIL2 qualified NAMUR devices

Internet link
Scan the QR code to access our products on the internet

Hans Turck GmbH & Co. KG ▪ Tel. +49 208 49 52-0 ▪ Fax +49 208 49 52-264

K08

General data

Connection	0.5 m cable	**Housing material**	Vestamide
Dimensions	15 x 8 x 11 mm	**Slot width**	2 mm

Types and data – selection table

Type	Operating voltage	Output	w	d
SI2-K08-Y1	8.2 VDC	NAMUR	w014	d322
SI2-K08-AP7	10…30 VDC	__, PNP	w012	d323

Many different types available, also as NPN version, see type code

K09

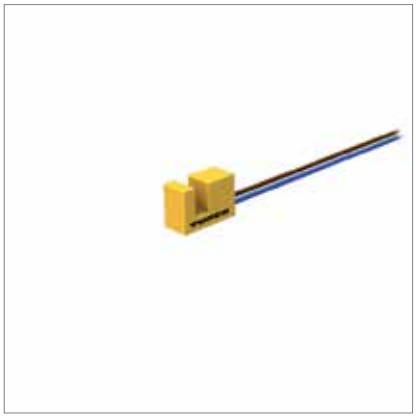

General data

Connection	0.5 m cable	**Operating voltage**	8.2 VDC
Output	NAMUR	**Housing material**	PBT
Dimensions	9 x 14 x 20 mm	**Slot width**	5 mm

Types and data – selection table

Type	w	d
SI5-K09-Y1	w014	d324

w Wiring diagrams on page 658 d Dimension drawing on page 670 Accessories on page 560

K10

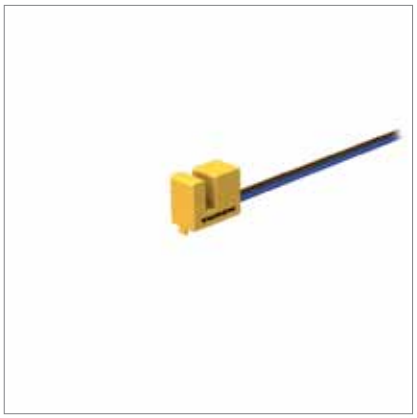

General data

Connection	0.5 m cable	**Housing material**	PBT
Dimensions	15 x 10 x 19 mm	**Slot width**	3.5 mm

Types and data – selection table

Type	Operating voltage	Output	w	d
SI3,5-K10-Y1	8.2 VDC	NAMUR	w014	d325
SI3,5-K10-Y1X	8.2 VDC	NAMUR	w014	d326
SI3,5-K10-AP6X	10…30 VDC	__, PNP	w012	d327

K30

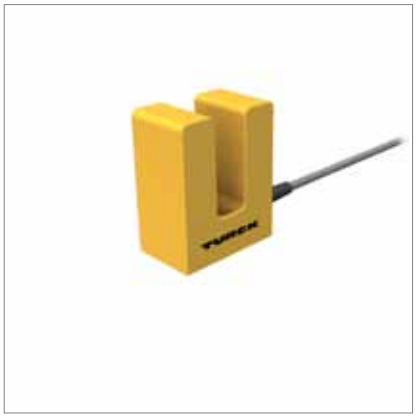

General data

Connection	2 m cable	**Housing material**	PBT
Dimensions	60 x 30 x 48 mm	**Slot width**	15 mm

Types and data – selection table

Type	Operating voltage	Output	w	d
SI15-K30-Y1X	8.2 VDC	NAMUR	w014	d328
SI15-K30-AP6X	10…30 VDC	__, PNP	w012	d328
SI15-K30-RZ3	20…250 VAC / 10…300 VDC	⊣_	w039	d329
SI15-K30-AZ3	20…250 VAC / 10…300 VDC	__	w028	d329

Many different types available, also as NPN version, see type code

Wiring diagrams on page 658 Dimension drawing on page 670 Accessories on page 560

Dual sensors for rotary actuators

In the chemical, petro-chemical and food industry, position control on rotary actuators is of great importance. TURCK dual sensors detect the end position of rotary actuators reliably. They are precisely tailored to the requirements of many different systems and application conditions. Simple mounting and cable routing reduce the expenses for installation.

Features

- Safe protection against environmental conditions
- High resistance to chemicals and cleaning agents
- Integrated valve control
- Bus-compatible
- Direct mounting on rotary actuator
- Robust and impact-resistant
- Repairs of the drive system without disconnection of wiring
- Absolutely maintenance-free
- Broad range of actuating elements and accessories
- Compliant with worldwide standards like ATEX and SIL

Properties

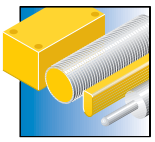

Designs
Robust, impact-resistant and compact housing

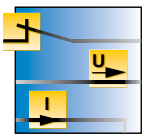

Electrical versions
2, 3 and 4-wire DC, 2-wire AC/DC, NAMUR,

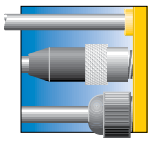

Electrical connections
Terminal chamber with removable terminal strip, cable or male M12

Materials
Robust and chemical resistant PP housing

Special features
ATEX approved and SIL2 qualified NAMUR devices

Internet link
Scan the QR code to access our products on the internet

Hans Turck GmbH & Co. KG ▪ Tel. +49 208 49 52-0 ▪ Fax +49 208 49 52-264

DSC26

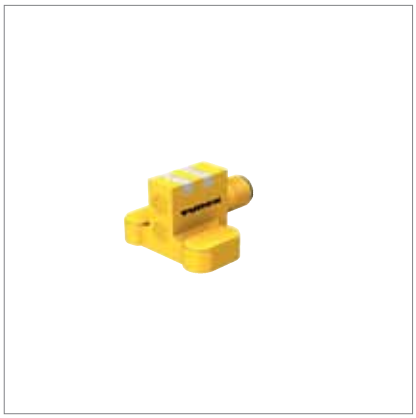

General data

Switching distance	4 mm,	**Housing material**	PP
Dimensions	42 x 26 x 28 mm		

For more details on actuators (pucks) and mounting accessories see chapter „Accessories“

Types and data – selection table

Type	Connection	Operating voltage	Output	w	d
NI4-DSC26-2Y1X2	2 m cable	8.2 VDC	NAMUR	w040	d330
NI4-DSC26-2Y1X2-H1140	male, M12 x 1	8.2 VDC	NAMUR	w041	d331
NI4-DSC26-2AP6X2-H1141	male, M12 x 1	10…30 VDC	_⟋‾, PNP	w042	d331
NI4-DSC26-2AP6X2	2 m cable	10…30 VDC	_⟋‾, PNP	w043	d330

DSU35

General data

Switching distance	4 mm,	**Housing material**	plastic, PA12-GF20

For more details on actuators (pucks) and mounting accessories see chapter „Accessories“

Types and data – selection table

Type	Connection	Operating voltage	Output	Dimensions	w	d
NI4-DSU35-2Y1X2	2 m cable	8.2 VDC	NAMUR	60 x 35 x 59 mm	w040	d332
NI4-DSU35-2Y1X2-H1140	male, M12 x 1	8.2 VDC	NAMUR	60 x 35.4 x 59 mm	w041	d333
NI4-DSU35TC-2Y1X2	Terminal chamber	8.2 VDC	NAMUR	60 x 35 x 62 mm	w044	d334
NI4-DSU35TC-2Y1X2/S933	Terminal chamber	8.2 VDC	NAMUR	60 x 35 x 62 mm	w044	d334
NI4-DSU35TC-2Y1X2/S97	Terminal chamber	8.2 VDC	NAMUR	60 x 35 x 62 mm	w044	d334
NI4-DSU35-2AP4X2	2 m cable	10…65 VDC	_⟋‾, PNP	60 x 35 x 59 mm	w043	d332
NI4-DSU35-2AP4X2-H1141	male, M12 x 1	10…65 VDC	_⟋‾, PNP	60 x 35.4 x 59 mm	w042	d333
NI4-DSU35TC-2AP4X2	Terminal chamber	10…65 VDC	_⟋‾, PNP	60 x 35 x 62 mm	w045	d334
NI4-DSU35TC-2AD4X2	Terminal chamber	10…65 VDC	_⟋‾, 2-wire	60 x 35 x 62 mm	w046	d334
NI4-DSU35TC-2AP4X2/3GD	Terminal chamber	10…65 VDC	_⟋‾, PNP	60 x 35 x 62 mm	w045	d334
NI4-DSU35-2ADZ30X2	2 m cable	20…250 VAC / 10…300 VDC	2x _⟋‾	60 x 35 x 59 mm	w047	d332
NI4-DSU35TC-2ADZ30X2	Terminal chamber	20…250 VAC / 10…300 VDC	2x _⟋‾	60 x 35 x 62 mm	w048	d334

Table continues on the next page…

w Wiring diagrams on page 658 d Dimension drawing on page 670 Accessories on page 560

… Table starts on previous page

Type	Connection	Operating voltage	Output	Dimensions	w	d
NI4-DSU35-2ASIX4-H1140	male, M12 x 1	18…33 VDC	__, AS-i V2.1	60 x 35.4 x 59 mm	w049	d335
NI4-DSU35-2DNETX5-H1150	male, M12 x 1	11…25 VDC	__, DeviceNet™	60 x 35.4 x 59 mm	w050	d336

Wiring diagrams on page 658 Dimension drawing on page 670 Accessories on page 560

Sensors with analog output

Inductive sensors with analog output provide a current, voltage or frequency signal and are ideally suited for simple control tasks. They are used in many applications, requiring more than just simple digital position indication. Typical applications are for example tension control, winding/unwinding motion or separation of parts according to size and material.

Features

- High repeatability
- Large measuring ranges
- Current, voltage and frequency output
- Optionally adjustable switching output
- Many different designs
- Excellent EMC protection
- Short-circuit and reverse-polarity protection
- All connection types

Properties

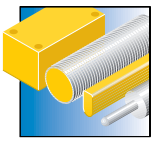

Designs
Compact rectangular, threaded and smooth barrels as well as ring shaped versions

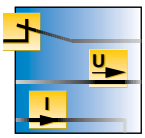

Electrical versions
0…10 V or 0…20 mA, 3/4-wire; 4…20 mA 2-wire intrinsically safe

Measuring ranges
High-precision 0.1…1.5 mm, large range 10…50 mm, ring sensors Ø 20, 50, 100 mm

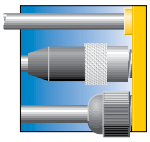

Electrical connections
Cable, connector or terminal chamber

Materials
Rugged and chemical-resistant plastic and metal housings for all types of applications

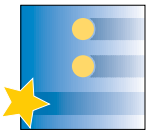

Special features
Sensors for metal detection; ATEX approved versions

Internet link
Scan the QR code to access our products on the internet

EH6.5 – 2 outputs 0…10 V – Metal distinction

General data

Connection	0.2 m male, M12 x 1	**Operating voltage**	15…30 VDC
Housing material	V2A (1.4301)	**Ambient temperature**	-25…+70 °C
Dimensions	Ø 6.5 x 41.6 mm	**Measuring accuracy**	< 1 % of full scale

Types and data – selection table

Type	w	d
BI1,5-EH6,5-0,2-Q20-2LU-H1141/S950	w051	d337

Q20 – 2 outputs 0…10 V – Metal distinction

General data

Connection	male, M12 x 1	**Operating voltage**	15…30 VDC
Housing material	PBT	**Ambient temperature**	-25…+70 °C
Dimensions	40 x 20 x 68 mm	**Measuring accuracy**	< 1 % of full scale

Types and data – selection table

Type	w	d
BI15-Q20-2LU-H1141/S950	w051	d338

w Wiring diagrams on page 658 d Dimension drawing on page 670 Accessories on page 560

Q80 – 2 outputs 0…10 V – Metal distinction

General data

Inside ring diameter D	50 mm	**Connection**	male, M12 x 1
Operating voltage	15…30 VDC	**Housing material**	PBT
Ambient temperature	-25…+70 °C	**Dimensions**	80 x 40 x 92 mm
Measuring accuracy	<1 % of full scale		

Types and data – selection table

Type	w	d
BI50R-Q80-2LU-H1141/S950	w051	d339

S32XL – 2 outputs 0…10 V – Metal distinction

General data

Inside ring diameter D	100 mm	**Connection**	male, M12 x 1
Operating voltage	15…30 VDC	**Housing material**	POM
Ambient temperature	-25…+70 °C	**Dimensions**	137.5 x 32 x 180 mm
Measuring accuracy	< 1 % of full scale		

Types and data – selection table

Type	w	d
NI100R-S32XL-2LU-H1141/S950	w051	d340

Q08 – Output 0…10 V and 0…20 mA

General data

Linearity deviation	5 % of full scale	**Measuring range**	1…4 mm
Connection	2 m cable	**Operating voltage**	15…30 VDC
Switching distance		**Housing material**	GD-Zn
Ambient temperature	-25 °C	**Dimensions**	20 x 8 x 32 mm
Repeatability	1 % of measuring range |A - B|		

Types and data – selection table

Type	w	d
BI7-Q08-LIU	w052	d341

Q14 – Output 0…10 V and 0…20 mA

General data

Linearity deviation	3 % of full scale	**Measuring range**	3…8 mm
Operating voltage	15…30 VDC	**Switching distance**	
Housing material	PBT	**Ambient temperature**	-25…+70 °C
Dimensions	30 x 14 x 52 mm	**Repeatability**	1 % of measuring range |A - B|

Types and data – selection table

Type	Connection	w	d
BI10-Q14-LIU-V1141	male, M8 x 1	w053	d342
BI10-Q14-LIU	2 m cable	w052	d343

w Wiring diagrams on page 658 d Dimension drawing on page 670 Accessories on page 560

Q14 – Ring sensor – Output 0…10 V

General data

Inside ring diameter D	20.1 mm	**Operating voltage**	15…30 VDC
Output	Analog output, 0…10 V	**Housing material**	PBT
Ambient temperature	-25…+70 °C	**Repeatability**	1 % of measuring range |A - B|

Types and data – selection table

Type	Connection	Dimensions	w	d
BI20R-Q14-LU-H1141	male, M12 x 1	30 x 14 x 62.5 mm	w038	d309
BI20R-Q14-LU	2 m cable	30 x 14 x 52 mm	w054	d344

Q20 – Output 0…10 V and 0…20 mA

General data

Linearity deviation	3 % of full scale	**Measuring range**	4…11 mm
Operating voltage	15…30 VDC	**Switching distance**	-
Housing material	PBT	**Ambient temperature**	-25…+70 °C
Dimensions	40 x 20 x 68 mm	**Repeatability**	1 % of measuring range |A - B|

Types and data – selection table

Type	Connection	w	d
BI15-Q20-LIU-H1141	male, M12 x 1	w053	d338
BI15-Q20-LIU	2 m cable	w052	d345

CK40 – Output 0…10 V and 0…20 mA

General data

Connection	male, M12 x 1	**Operating voltage**	15…30 VDC
Housing material	PBT	**Ambient temperature**	-25…+70 °C
Dimensions	40 x 40 x 65 mm	**Repeatability**	1 % of measuring range |A - B|

Variable orientation of active face in 5 directions

Types and data – selection table

Type	Linearity deviation	Measuring range	Switching distance	w	d
BI15-CK40-LIU-H1141	3 % of full scale	4…11 mm		w053	d346
NI25-CK40-LIU-H1141	5 % of full scale	5…25 mm		w053	d346

CP40 – Output 0…10 V and 0…20 mA

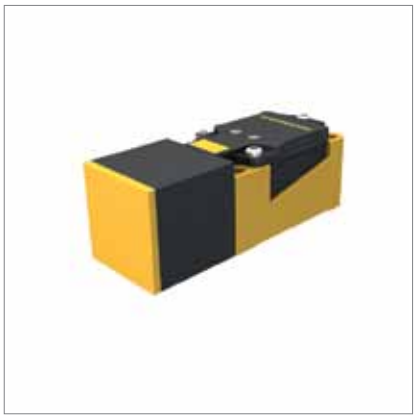

General data

Connection	Terminal chamber	**Operating voltage**	15…30 VDC
Housing material	PBT	**Ambient temperature**	-25…+70 °C
Dimensions	40 x 40 x 114 mm	**Repeatability**	1 % of measuring range |A - B|

Variable orientation of active face in 9 directions

Types and data – selection table

Type	Linearity deviation	Measuring range	Switching distance	w	d
BI15-CP40-LIU	3 % of full scale	4…11 mm		w055	d347
NI25-CP40-LIU	5 % of full scale	5…25 mm		w055	d347

w Wiring diagrams on page 658 d Dimension drawing on page 670 Accessories on page 560

Q80 – Output 0…10 V and 0…20 mA

General data

Linearity deviation	5 % of full scale	**Measuring range**	10…50 mm
Connection	male, M12 x 1	**Operating voltage**	15…30 VDC
Switching distance		**Housing material**	PBT
Ambient temperature	-25…+70 °C	**Dimensions**	80 x 40 x 92 mm
Repeatability	1 % of measuring range |A - B|		

Types and data – selection table

Type	w	d
NI50-Q80-LIU-H1141	w053	d348

M8 – Voltage output 0…10 V

General data

Linearity deviation	3 % of full scale	**Measuring range**	0.25…1.25 mm
Operating voltage	15…30 VDC	**Switching distance**	
Housing material	V4A (1.4404)	**Ambient temperature**	-25…+70 °C
Repeatability	1 % of measuring range |A - B|		

Types and data – selection table

Type	Connection	Dimensions	w	d
BI1,5-EG08-LU-H1341	male, M12 x 1	Ø 8 x 57 mm	w038	d142
BI1,5-EG08-LU	2 m cable	Ø 8 x 42 mm	w054	d349

M12 – Output 0…10 V and 0…20 mA

General data

Operating voltage	15…30 VDC	**Housing material**	CuZn-Cr
Repeatability	1 % of measuring range |A - B|		

Types and data – selection table

Type	Linearity deviation	Measuring range	Connection	Switching distance	Ambient temperature	Dimensions	w	d
BI4-M12-LIU-H1141	5 % of full scale	0.5…3 mm	male, M12 x 1		-25 °C	Ø 12 x 62 mm	w053	d350
BI4-M12-LIU	5 % of full scale	0.5…3 mm	2 m cable		-25 °C	Ø 12 x 64 mm	w052	d351
BI2-M12-LIU-H1141	3 % of full scale	1…2.5 mm	male, M12 x 1		-25…+70 °C	Ø 12 x 62 mm	w053	d350
BI2-M12-LIU	3 % of full scale	1…2.5 mm	2 m cable		-25…+70 °C	Ø 12 x 64 mm	w052	d351
NI5-M12-LIU-H1141	5 % of full scale	0.5…4 mm	male, M12 x 1		-25…+70 °C	Ø 12 x 62 mm	w053	d352
NI5-M12-LIU	5 % of full scale	0.5…4 mm	2 m cable		-25…+70 °C	Ø 12 x 64 mm	w052	d353

M18 – Output 0…10 V and 0…20 mA

General data

Operating voltage	15…30 VDC	**Housing material**	CuZn-Cr
Repeatability	1 % of measuring range |A - B|		

Types and data – selection table

Type	Linearity deviation	Measuring range	Connection	Switching distance	Ambient temperature	Dimensions	w	d
BI8-M18E-LIU-H1141	5 % of full scale	1…5 mm	male, M12 x 1		-25 °C	Ø 18 x 72 mm	w053	d354
BI8-M18-LIU	5 % of full scale	1…5 mm	2 m cable		-25 °C	Ø 18 x 64 mm	w052	d236
BI5-M18E-LIU-H1141	3 % of full scale	2…4 mm	male, M12 x 1		-25…+70 °C	Ø 18 x 72 mm	w053	d354
BI5-M18-LIU	3 % of full scale	2…4 mm	2 m cable		-25…+70 °C	Ø 18 x 64 mm	w052	d236
NI10-M18E-LIU-H1141	5 % of full scale	1…7 mm	male, M12 x 1		-25…+70 °C	Ø 18 x 72 mm	w053	d355
NI10-M18-LIU	5 % of full scale	1…7 mm	2 m cable		-25…+70 °C	Ø 18 x 64 mm	w052	d356

w Wiring diagrams on page 658 d Dimension drawing on page 670 Accessories on page 560

M18 – Current output 4…20 mA – Intrinsically safe

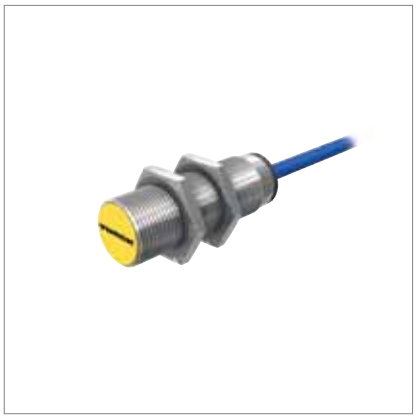

General data

Linearity deviation	5 % of full scale	**Measuring range**	1…5 mm
Connection	2 m cable	**Operating voltage**	14…30 VDC
Switching distance		**Housing material**	CuZn-Cr
Ambient temperature	-25 °C	**Dimensions**	Ø 18 x 64 mm
Repeatability	1 % of measuring range |A - B|		

Types and data – selection table

Type	w	d
BI8-M18-LI-EXI	w056	d236

M18 – Voltage output 0…10 V and 3-wire PNP

General data

Linearity deviation	5 % of full scale	**Connection**	2 m cable
Operating voltage	15…30 VDC	**Switching distance**	
Housing material	CuZn-Cr	**Ambient temperature**	-25…+70 °C
Dimensions	Ø 18 x 54 mm	**Repeatability**	1 % of measuring range |A - B|
Measuring range	1…5 mm		

Types and data – selection table

Type	w	d
BI8-M18-LUAP6X	w057	d357

M18 – Inductive linear position sensor – Output 0…10 V and 0…20 mA

General data

Connection	2 m cable	**Operating voltage**	15…30 VDC
Switching distance		**Housing material**	CuZn-Cr
Ambient temperature	-25…+70 °C	**Repeatability**	1 % of measuring range |A - B|

Actuation via short-circuiting ring (included in delivery), blind hole or similar

Types and data – selection table

Type	Linearity deviation	Measuring range	Dimensions	w	d
WI70-M18-LIU5	3 % of full scale	0…70 mm	Ø 18 x 139 mm	w052	d358
WI40-M18-LIU5	2 % of full scale	0…40 mm	Ø 18 x 107.5 mm	w052	d359

M30 – Output 0…10 V and 0…20 mA

General data

Operating voltage	15…30 VDC	**Switching distance**	
Housing material	CuZn-Cr	**Repeatability**	1 % of measuring range |A - B|

Types and data – selection table

Type	Linearity deviation	Measuring range	Connection	Ambient temperature	Dimensions	w	d
BI15-M30E-LIU-H1141	5 % of full scale	2…10 mm	male, M12 x 1	-25 °C	Ø 30 x 77 mm	w053	d360
BI15-M30-LIU	5 % of full scale	2…10 mm	2 m cable	-25 °C	Ø 30 x 64 mm	w052	d259
BI10-M30E-LIU-H1141	3 % of full scale	3…8 mm	male, M12 x 1	-25…+70 °C	Ø 30 x 77 mm	w053	d360
BI10-M30-LIU	3 % of full scale	3…8 mm	2 m cable	-25…+70 °C	Ø 30 x 64 mm	w052	d259

w Wiring diagrams on page 658 d Dimension drawing on page 670 Accessories on page 560

M30 – Voltage output 4…20 mA – Intrinsically safe

General data

Linearity deviation	5 % of full scale	**Measuring range**	2…10 mm
Connection	2 m cable	**Operating voltage**	14…30 VDC
Switching distance		**Housing material**	CuZn-Cr
Ambient temperature	-25 °C	**Dimensions**	Ø 30 x 64 mm
Repeatability	1 % of measuring range |A - B|		

Types and data – selection table

Type	w	d
BI15-M30-LI-EXI	w056	d259

M30 – Voltage output 0…10 V and 3-wire PNP

General data

Linearity deviation	5 % of full scale	**Measuring range**	2…10 mm
Operating voltage	15…30 VDC	**Connection**	2 m cable
Housing material	CuZn-Cr	**Switching distance**	
Dimensions	Ø 30 x 64 mm	**Ambient temperature**	-25…+70 °C
		Repeatability	1 % of measuring range |A - B|

Types and data – selection table

Type	w	d
BI15-M30-LUAP6X	w057	d361

Ø 4 mm – Output 0…10 V and 0…20 mA

General data

Measuring range	0.1…1.5 mm	**Connection**	0.3 m male, M12 x 1
Operating voltage	15…30 VDC	**Switching distance**	
Housing material	V4A (1.4404)	**Ambient temperature**	-25…+70 °C
Dimensions	Ø 4 x 30 mm	**Repeatability**	1 % of measuring range |A - B|

Types and data – selection table

Type	w	d
BI1,5-EH04-0,3-M12-SIU-H1141	w053	d362

Ø 6.5 mm – Voltage output 0…10 V

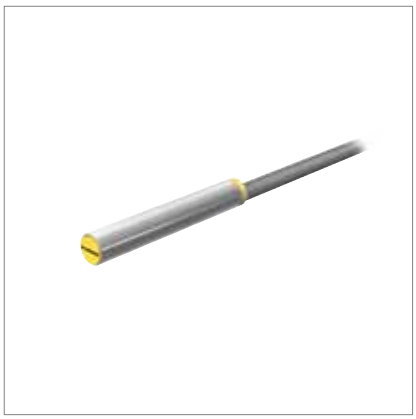

General data

Linearity deviation	3 % of full scale	**Measuring range**	0.25…1.25 mm
Connection	2 m cable	**Operating voltage**	15…30 VDC
Switching distance		**Housing material**	V2A (1.4301)
Ambient temperature	-25…+70 °C	**Dimensions**	Ø 6.5 x 42 mm
Repeatability	1 % of measuring range |A - B|		

Types and data – selection table

Type	w	d
BI1,5-EH6,5-LU	w054	d363

w Wiring diagrams on page 658 d Dimension drawing on page 670 Accessories on page 560

Sensors with extended temperature range

Many different sensors are available for applications characterized by extreme ambient temperatures of -60 °C or +250 °C. These TURCK devices are typically used in deep freezing systems, outdoor applications, in metal foundries, the glass industry or in drying furnaces of varnishing stations used in the automotive industry.
Our climate-proof versions in stainless steel housings are exellently suited for humid environments affected by sudden temperature changes of up to +120 °C.

Features

- Six different series for temperatures of -60 °C up to +250 °C
- Complete product families with all housing types: M8, M12, M18, M30, 40 x 40, 80 x 80
- Specially sealed sensors for wet environments
- Different cable materials tailored to the temperature ranges
- Excellent EMC properties

Properties

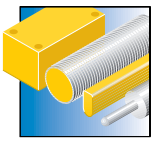

Designs
Broad range of devices from the 8 mm threaded barrel up to the 80 x 80 mm rectangular version

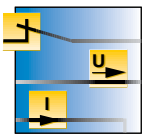

Electrical versions
NAMUR -40…+100 °C;
3/4-wire DC: -60…+250 °C;
2-wire AC: -40…+120 °C

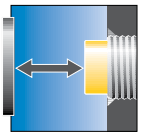

Switching distances
7 mm at temperatures of -60 °C; 40 mm at temperatures of +250 °C

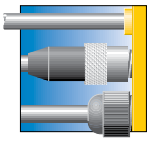

Electrical connections
Cable, connector, terminal chamber and pigtail; sensors with external amplifier for temperatures of +160 °C and higher

Materials
Rugged, temperature resistant housing materials and cable qualities

Special features
Washdown; pressure-resistant active face

Internet link
Scan the QR code to access our products on the internet

Hans Turck GmbH & Co. KG ▪ Tel. +49 208 49 52-0 ▪ Fax +49 208 49 52-264

-60 °C – M12

General data

Connection	2 m cable	**Operating voltage**	10…30 VDC
Output	_\‾_, PNP	**Housing material**	V4A (1.4571)
Ambient temperature	-60…+60 °C		

Types and data – selection table

Type	Switching distance	Dimensions	w	d
BI2-EM12WD-AP6/S929	2 mm,	Ø 12 x 63 mm	w012	d364
NI4-EM12WD-AP6/S929	4 mm,	Ø 12 x 67 mm	w012	d365

-60 °C – M18

General data

Connection	2 m cable	**Operating voltage**	10…30 VDC
Output	_\‾_, PNP	**Housing material**	V4A (1.4571)
Ambient temperature	-60…+60 °C		

Types and data – selection table

Type	Switching distance	Dimensions	w	d
BI5-EM18WD-AP6X/S929	5 mm,	Ø 18 x 67 mm	w012	d366
NI7-EM18WD-AP6X/S929	7 mm,	Ø 18 x 75 mm	w012	d367

w Wiring diagrams on page 658 d Dimension drawing on page 670 Accessories on page 560

-40 °C – CP40

General data

Connection	Terminal chamber	**Housing material**	PBT
Ambient temperature	-40…+70 °C	**Dimensions**	40 x 40 x 114 mm

Variable orientation of active face in 9 directions

Types and data – selection table

Type	Operating voltage	Output	Switching distance	w	d
BI15-CP40-VP4X2/S97	10…65 VDC	, PNP	15 mm,	w023	d122
NI20-CP40-VP4X2/S97	10…65 VDC	, PNP	20 mm,	w023	d122
BI15-CP40-Y1X/S97	8.2 VDC	NAMUR	15 mm,	w025	d124
BI15-CP40-FZ3X2/S97	20…250 VAC / 10…300 VDC	,	15 mm,	w024	d122
NI20-CP40-FZ3X2/S97	20…250 VAC / 10…300 VDC	,	20 mm,	w024	d122

-40 °C – CP80

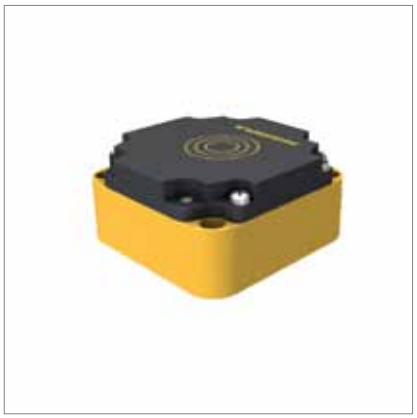

General data

Connection	Terminal chamber	**Switching distance**	40 mm,
Housing material	PBT	**Ambient temperature**	-40…+70 °C
Dimensions	80 x 41 x 80 mm		

Types and data – selection table

Type	Operating voltage	Output	w	d
NI40-CP80-Y1/S97	8.2 VDC	NAMUR	w025	d132
NI40-CP80-VP4X2/S97	10…65 VDC	, PNP	w023	d130
NI40-CP80-FZ3X2/S97	20…250 VAC / 10…300 VDC	,	w024	d130

-40 °C – M12 – NAMUR

General data

Operating voltage	8.2 VDC	**Output**	NAMUR
Ambient temperature	-40…+70 °C		

Types and data – selection table

Type	Connection	Switching distance	Housing material	Dimensions	w	d
BI2-P12-Y1X/S97	2 m cable	2 mm,	PA	Ø 12 x 34 mm	w014	d168
NI5-P12-Y1X/S97	2 m cable	5 mm,	PA	Ø 12 x 34 mm	w014	d168
NI5-EM12WDTC-Y1X	Terminal chamber, Removable cage clamp terminals	5 mm,	V4A (1.4404)	Ø 12 x 70 mm	w025	d162
BI2-EM12WDTC-Y1X	Terminal chamber, Removable cage clamp terminals	2 mm,	V4A (1.4404)	Ø 12 x 70 mm	w025	d163

-40 °C – M12 – 3-wire DC

General data

Operating voltage	10…30 VDC	**Output**	, PNP
Housing material	V4A (1.4404)		

Types and data – selection table

Type	Connection	Switching distance	Dimensions	w	d
BI4U-EM12WD-AP6X-H1141	male, M12 x 1	4 mm,	Ø 12 x 52 mm	w013	d170
NI10U-EM12WD-AP6X-H1141	male, M12 x 1	10 mm,	Ø 12 x 52 mm	w013	d196
BI4U-EM12WD-AP6X	2 m cable	4 mm,	Ø 12 x 52 mm	w012	d188
NI10U-EM12WD-AP6X	2 m cable	10 mm,	Ø 12 x 52 mm	w012	d187
BI4U-EM12WDTC-AP6X	Terminal chamber, Removable cage clamp terminals	4 mm,	Ø 12 x 80 mm	w022	d185
NI10U-EM12WDTC-AP6X	Terminal chamber, Removable cage clamp terminals	10 mm,	Ø 12 x 80 mm	w022	d182

Many different types available, also as NPN version, see type code

w Wiring diagrams on page 658 d Dimension drawing on page 670 Accessories on page 560

-40 °C – S18 – NAMUR

General data

Operating voltage	8.2 VDC	**Output**	NAMUR
Ambient temperature	-40…+70 °C		

Types and data – selection table

Type	Connection	Switching distance	Housing material	Dimensions	w	d
NI10-P18-Y1X/S97	2 m cable	10 mm,	PA	Ø 18 x 34 mm	w014	d204
BI5-P18-Y1X/S97	2 m cable	5 mm,	PA	Ø 18 x 34 mm	w014	d204
BI5-EM18WDTC-Y1X	Terminal chamber, Removable cage clamp terminals	5 mm,	V4A (1.4404)	Ø 18 x 71 mm	w025	d207
NI10-EM18WDTC-Y1X	Terminal chamber, Removable cage clamp terminals	10 mm,	V4A (1.4404)	Ø 18 x 71 mm	w025	d208

-40 °C – M18 – 3-wire DC

General data

Operating voltage	10…30 VDC	**Output**	, PNP
Housing material	V4A (1.4404)		

Types and data – selection table

Type	Connection	Switching distance	Dimensions	w	d
BI8U-EM18WD-AP6X	2 m cable	8 mm,	Ø 18 x 52 mm	w012	d227
NI15U-EM18WD-AP6X	2 m cable	15 mm,	Ø 18 x 52 mm	w012	d228
BI8U-EM18WD-AP6X-H1141	male, M12 x 1	8 mm,	Ø 18 x 52 mm	w013	d202
NI15U-EM18WD-AP6X-H1141	male, M12 x 1	15 mm,	Ø 18 x 52 mm	w013	d225
BI8U-EM18WDTC-AP6X	Terminal chamber, Removable cage clamp terminals	8 mm,	Ø 18 x 81 mm	w022	d233
NI15U-EM18WDTC-AP6X	Terminal chamber, Removable cage clamp terminals	15 mm,	Ø 18 x 81 mm	w022	d230

Many different types available, also as NPN version, see type code

-40 °C – M30 – NAMUR

General data

Operating voltage	8.2 VDC	**Output**	NAMUR
Ambient temperature	-40…+70 °C		

Types and data – selection table

Type	Connection	Switching distance	Housing material	Dimensions	w	d
BI10-P30-Y1X/S97	2 m cable	10 mm,	PA	Ø 30 x 44 mm	w014	d245
NI15-P30-Y1X/S97	2 m cable	15 mm,	PA	Ø 30 x 44 mm	w014	d245
BI10-EM30WDTC-Y1X	Terminal chamber, Removable cage clamp terminals	10 mm,	V4A (1.4404)	Ø 30 x 80 mm	w025	d251
NI15-EM30WDTC-Y1X	Terminal chamber, Removable cage clamp terminals	15 mm,	V4A (1.4404)	Ø 30 x 80 mm	w025	d252

-40 °C – M30 – 3-wire DC

General data

Operating voltage	10…30 VDC	**Output**	⎯⎺⎯, PNP
Housing material	V4A (1.4404)	**Ambient temperature**	-40…+100 °C

Removable terminal strip and variable cable outlet

Types and data – selection table

Type	Connection	Switching distance	Dimensions	w	d
BI15U-EM30WDTC-AP6X	Terminal chamber, Removable cage clamp terminals	15 mm,	Ø 30 x 95 mm	w022	d264
NI30U-EM30WDTC-AP6X	Terminal chamber, Removable cage clamp terminals	30 mm,	Ø 30 x 95 mm	w022	d266
BI15U-EM30WD-AP6X	2 m cable	15 mm,	Ø 30 x 66 mm	w012	d260
NI30U-EM30WD-AP6X	2 m cable	30 mm,	Ø 30 x 66 mm	w012	d368
BI15U-EM30WD-AP6X-H1141	male, M12 x 1	15 mm,	Ø 30 x 62 mm	w013	d243
NI30U-EM30WD-AP6X-H1141	male, M12 x 1	30 mm,	Ø 30 x 62 mm	w013	d258

Many different types available, also as NPN version, see type code

w Wiring diagrams on page 658 d Dimension drawing on page 670 Accessories on page 560

+100 °C – CP40

General data

Connection	Terminal chamber	**Housing material**	PBT
Ambient temperature	-25…+100 °C	**Dimensions**	40 x 40 x 114 mm

Variable orientation of active face in 9 directions

Types and data – selection table

Type	Operating voltage	Output	Switching distance	w	d
BI15-CP40-VP4X2/S100	10…65 VDC	, PNP	15 mm,	w023	d122
NI20-CP40-VP4X2/S100	10…65 VDC	, PNP	20 mm,	w023	d122
BI15-CP40-Y1X/S100	8.2 VDC	NAMUR	15 mm,	w025	d124
NI20-CP40-Y1X/S100	8.2 VDC	NAMUR	20 mm,	w025	d124
BI15-CP40-FZ3X2/S100	20…250 VAC / 10…300 VDC	,	15 mm,	w024	d122
NI20-CP40-FZ3X2/S100	20…250 VAC / 10…300 VDC	,	20 mm,	w024	d122

+100 °C – CP80

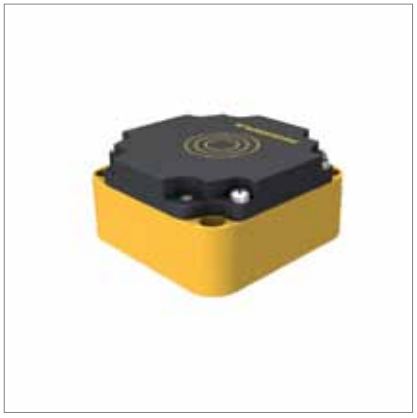

General data

Connection	Terminal chamber	**Switching distance**	40 mm,
Housing material	PBT	**Ambient temperature**	-25…+100 °C
Dimensions	80 x 41 x 80 mm		

Types and data – selection table

Type	Operating voltage	Output	w	d
NI40-CP80-Y1/S100	8.2 VDC	NAMUR	w025	d132
NI40-CP80-VP4X2/S100	10…65 VDC	, PNP	w023	d130
NI40-CP80-FZ3X2/S100	20…250 VAC / 10…300 VDC	,	w024	d130

+100 °C – M8

General data

Connection	2 m cable	**Operating voltage**	10…30 VDC
Output	__, PNP	**Switching distance**	2 mm,
Housing material	V4A (1.4404)	**Ambient temperature**	-25…+100 °C
Dimensions	Ø 8 x 42 mm		

Types and data – selection table

Type	w	d
BI2-EG08-AP6X/S100	w012	d148

Many different types available, also as NPN version, see type code

+100 °C – M12 – NAMUR

General data

Operating voltage	8.2 VDC	**Output**	NAMUR
Ambient temperature	-25…+100 °C		

Types and data – selection table

Type	Connection	Switching distance	Housing material	Dimensions	w	d
NI5-P12-Y1/S100	2 m cable	5 mm,	PA	Ø 12 x 34 mm	w014	d369
BI2-P12-Y1/S100	2 m cable	2 mm,	PA	Ø 12 x 34 mm	w014	d369
BI2-EG12-Y1X/S100 7M	7 m cable	2 mm,	V2A (1.4301)	Ø 12 x 34 mm	w014	d169
NI5-EG12-Y1X/S100 7M	7 m cable	5 mm,	V2A (1.4301)	Ø 12 x 34 mm	w014	d167
NI5-EM12WDTC-Y1X	Terminal chamber, Removable cage clamp terminals	5 mm,	V4A (1.4404)	Ø 12 x 70 mm	w025	d162
BI2-EM12WDTC-Y1X	Terminal chamber, Removable cage clamp terminals	2 mm,	V4A (1.4404)	Ø 12 x 70 mm	w025	d163

w Wiring diagrams on page 658 d Dimension drawing on page 670 Accessories on page 560

+100 °C – M12 – 3-wire DC

General data

Operating voltage	10…30 VDC	**Output**	⎽╲⎽, PNP
Housing material	V4A (1.4404)		

Types and data – selection table

Type	Connection	Switching distance	Dimensions	w	d
BI4U-EM12WD-AP6X-H1141	male, M12 x 1	4 mm,	Ø 12 x 52 mm	w013	d170
NI10U-EM12WD-AP6X-H1141	male, M12 x 1	10 mm,	Ø 12 x 52 mm	w013	d196
BI4U-EM12WD-AP6X	2 m cable	4 mm,	Ø 12 x 52 mm	w012	d188
NI10U-EM12WD-AP6X	2 m cable	10 mm,	Ø 12 x 52 mm	w012	d187
BI4U-EM12WDTC-AP6X	Terminal chamber, Removable cage clamp terminals	4 mm,	Ø 12 x 80 mm	w022	d185
NI10U-EM12WDTC-AP6X	Terminal chamber, Removable cage clamp terminals	10 mm,	Ø 12 x 80 mm	w022	d182

Many different types available, also as NPN version, see type code

+100 °C – M12 – 2-wire AC/DC

General data

Connection	2 m cable	**Operating voltage**	20…250 VAC / 10…300 VDC
Output	⎽╲⎽	**Housing material**	PA
Ambient temperature	-25…+100 °C		

Types and data – selection table

Type	Switching distance	Dimensions	w	d
BI2-S12-AZ31X/S100	2 mm,	Ø 12 x 60 mm	w015	d179
NI4-S12-AZ31X/S100	4 mm,	Ø 12 x 64 mm	w015	d179

+100 °C – S18 – NAMUR

General data

Operating voltage	8.2 VDC	**Output**	NAMUR
Ambient temperature	-25…+100 °C		

Types and data – selection table

Type	Connection	Switching distance	Housing material	Dimensions	w	d
BI5-EG18-Y1X/S100 7M	7 m cable	5 mm,	V2A (1.4301)	Ø 18 x 34 mm	w014	d205
NI10-P18-Y1/S100	2 m cable	10 mm,	PA	Ø 18 x 34 mm	w014	d370
BI5-P18-Y1/S100	2 m cable	5 mm,	PA	Ø 18 x 34 mm	w014	d370
NI10-EG18-Y1X/S100 7M	7 m cable	10 mm,	V2A (1.4301)	Ø 18 x 34 mm	w014	d206
BI5-EM18WDTC-Y1X	Terminal chamber, Removable cage clamp terminals	5 mm,	V4A (1.4404)	Ø 18 x 71 mm	w025	d207
NI10-EM18WDTC-Y1X	Terminal chamber, Removable cage clamp terminals	10 mm,	V4A (1.4404)	Ø 18 x 71 mm	w025	d208

+100 °C – M18 – 3-wire DC

General data

Operating voltage	10…30 VDC	**Output**	_\‾_, PNP
Housing material	V4A (1.4404)		

Types and data – selection table

Type	Connection	Switching distance	Dimensions	w	d
BI8U-EM18WD-AP6X	2 m cable	8 mm,	Ø 18 x 52 mm	w012	d227
NI15U-EM18WD-AP6X	2 m cable	15 mm,	Ø 18 x 52 mm	w012	d228
BI8U-EM18WD-AP6X-H1141	male, M12 x 1	8 mm,	Ø 18 x 52 mm	w013	d202
NI15U-EM18WD-AP6X-H1141	male, M12 x 1	15 mm,	Ø 18 x 52 mm	w013	d225
BI8U-EM18WDTC-AP6X	Terminal chamber, Removable cage clamp terminals	8 mm,	Ø 18 x 81 mm	w022	d233
NI15U-EM18WDTC-AP6X	Terminal chamber, Removable cage clamp terminals	15 mm,	Ø 18 x 81 mm	w022	d230

Many different types available, also as NPN version, see type code

w Wiring diagrams on page 658 d Dimension drawing on page 670 Accessories on page 560

+100 °C – M18 – 2-wire AC/DC

General data

Connection	2 m cable	**Operating voltage**	20…250 VAC / 10…300 VDC
Output		**Housing material**	PA
Ambient temperature	-25…+100 °C	**Dimensions**	Ø 18 x 64 mm

Types and data – selection table

Type	Switching distance	w	d
BI5-S18-AZ3X/S100	5 mm,	w028	d217
NI8-S18-AZ3X/S100	8 mm,	w028	d217

+100 °C – M30 – NAMUR

General data

Operating voltage	8.2 VDC	**Output**	NAMUR
Ambient temperature	-25…+100 °C		

Types and data – selection table

Type	Connection	Switching distance	Housing material	Dimensions	w	d
BI10-P30-Y1/S100	2 m cable	10 mm,	PA	Ø 30 x 44 mm	w014	d371
NI15-P30-Y1/S100	2 m cable	15 mm,	PA	Ø 30 x 44 mm	w014	d371
BI10-EG30-Y1X/S100 7M	7 m cable	10 mm,	V2A (1.4301)	Ø 30 x 44 mm	w014	d246
NI15-EG30-Y1X/S100 7M	7 m cable	15 mm,	V2A (1.4301)	Ø 30 x 44 mm	w014	d247
BI10-EM30WDTC-Y1X	Terminal chamber, Removable cage clamp terminals	10 mm,	V4A (1.4404)	Ø 30 x 80 mm	w025	d251
NI15-EM30WDTC-Y1X	Terminal chamber, Removable cage clamp terminals	15 mm,	V4A (1.4404)	Ø 30 x 80 mm	w025	d252

+100 °C – M30 – 3-wire DC

General data

Operating voltage	10…30 VDC	**Output**	⎯⎺⎯, PNP
Housing material	V4A (1.4404)	**Ambient temperature**	-40…+100 °C

Removable terminal strip and variable cable outlet

Types and data – selection table

Type	Connection	Switching distance	Dimensions	w	d
BI15U-EM30WDTC-AP6X	Terminal chamber, Removable cage clamp terminals	15 mm,	Ø 30 x 95 mm	w022	d264
NI30U-EM30WDTC-AP6X	Terminal chamber, Removable cage clamp terminals	30 mm,	Ø 30 x 95 mm	w022	d266
BI15U-EM30WD-AP6X	2 m cable	15 mm,	Ø 30 x 66 mm	w012	d260
NI30U-EM30WD-AP6X	2 m cable	30 mm,	Ø 30 x 66 mm	w012	d368
BI15U-EM30WD-AP6X-H1141	male, M12 x 1	15 mm,	Ø 30 x 62 mm	w013	d243
NI30U-EM30WD-AP6X-H1141	male, M12 x 1	30 mm,	Ø 30 x 62 mm	w013	d258

Many different types available, also as NPN version, see type code

+100 °C – M30 – 2-wire AC/DC

General data

Connection	2 m cable	**Operating voltage**	20…250 VAC / 10…300 VDC
Output	⎯⎺⎯	**Housing material**	PA
Ambient temperature	-25…+100 °C	**Dimensions**	Ø 30 x 64 mm

Types and data – selection table

Type	Switching distance	w	d
BI10-S30-AZ3X/S100	10 mm,	w028	d254
NI15-S30-AZ3X/S100	15 mm,	w028	d254

w Wiring diagrams on page 658 d Dimension drawing on page 670 Accessories on page 560

+120 °C – Ø160 mm

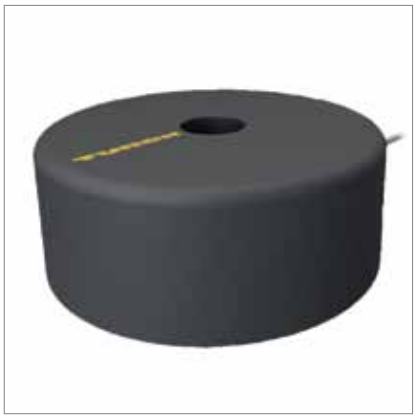

General data

Connection	2 m cable	**Operating voltage**	10…55 VDC
Output	__, PNP	**Switching distance**	100 mm,
Housing material	PPO	**Ambient temperature**	-25…+120 °C
Dimensions	60 x 160 mm		

Types and data – selection table

Type	w	d
NI100-Q160-AP44X/S120	w012	d372

+120 °C – M12

General data

Connection	2 m cable	**Operating voltage**	10…30 VDC
Output	__, PNP	**Housing material**	V4A (1.4571)
Ambient temperature	-25…+120 °C		

Types and data – selection table

Type	Switching distance	Dimensions	w	d
BI2-EM12D-AP6/S120	2 mm,	Ø 12 x 63 mm	w012	d364
NI4-EM12D-AP6/S120	4 mm,	Ø 12 x 67 mm	w012	d365

+120 °C – M18

General data

Connection	2 m cable	**Ambient temperature**	-25…+120 °C

Types and data – selection table

Type	Operating voltage	Output	Switching distance	Housing material	Dimensions	w	d
BI5-M18-AP6X/S120	10…30 VDC	, PNP	5 mm,	CuZn-Cr	Ø 18 x 87 mm	w012	d373
NI8-M18-AP6X/S120	10…30 VDC	, PNP	8 mm,	CuZn-Cr	Ø 18 x 97 mm	w012	d374
BI5-EM18D-VP6X/S120	10…30 VDC	, PNP	5 mm,	V4A (1.4571)	Ø 18 x 95 mm	w010	d375
NI7-EM18D-VP6X/S120	10…30 VDC	, PNP	7 mm,	V4A (1.4571)	Ø 18 x 103 mm	w010	d376
BI5-M18-AZ3X/S120	20…250 VAC		5 mm,	CuZn-Cr	Ø 18 x 87 mm	w015	d373
NI8-M18-AZ3X/S120	20…250 VAC		8 mm,	CuZn-Cr	Ø 18 x 97 mm	w015	d374

+120 °C – M30

General data

Connection	2 m cable	**Ambient temperature**	-25…+120 °C

Types and data – selection table

Type	Operating voltage	Output	Switching distance	Housing material	Dimensions	w	d
BI10-M30-AP6X/S120	10…30 VDC	, PNP	10 mm,	CuZn-Cr	Ø 30 x 87 mm	w012	d377
NI15-M30-AP6X/S120	10…30 VDC	, PNP	15 mm,	CuZn-Cr	Ø 30 x 97 mm	w012	d378
BI10-EM30D-VP6X/S120	10…30 VDC	, PNP	10 mm,	V4A (1.4571)	Ø 30 x 100 mm	w010	d379
NI15-EM30D-VP6X/S120	10…30 VDC	, PNP	15 mm,	V4A (1.4571)	Ø 30 x 110 mm	w010	d380
BI10-M30-AZ3X/S120	20…250 VAC		10 mm,	CuZn-Cr	Ø 30 x 87 mm	w015	d377
NI15-M30-AZ3X/S120	20…250 VAC		15 mm,	CuZn-Cr	Ø 30 x 97 mm	w015	d378

w Wiring diagrams on page 658 d Dimension drawing on page 670 Accessories on page 560

+160 °C – M18

General data

Connection	2 m cable	**Operating voltage**	10…30 VDC
Output	__, PNP	**Housing material**	V4A (1.4571)
Ambient temperature	-25…+160 °C		

Types and data – selection table

Type	Switching distance	Dimensions	w	d
BI5-EM18-AP6/S907	5 mm,	Ø 18 x 95 mm	w012	d381
NI8-EM18-AP6/S907	8 mm,	Ø 18 x 103 mm	w012	d382

+160 °C – M30

General data

Connection	2 m cable	**Operating voltage**	10…30 VDC
Output	__, PNP	**Housing material**	V4A (1.4571)
Ambient temperature	-25…+160 °C		

Types and data – selection table

Type	Switching distance	Dimensions	w	d
BI10-EM30-AP6/S907	10 mm,	Ø 30 x 100 mm	w012	d383
NI15-EM30-AP6/S907	15 mm,	Ø 30 x 110 mm	w012	d384

+250 °C – Q40 – Sensor

General data

Connection	5 m male, M12 x 1	**Output**	, PNP
Switching distance	25 mm,	**Housing material**	Al
Ambient temperature	0…+250 °C	**Dimensions**	40 x 40 x 52 mm

Amplifier EM30-AP6X2-H1141/S1102 required

Types and data – selection table

Type	w	d
NI25-CQ40/S1102 5M	w058	d385

+250 °C – Q80 – Sensor

General data

Connection	5 m male, M12 x 1	**Output**	, PNP
Switching distance	40 mm,	**Housing material**	Al
Ambient temperature	0…+250 °C	**Dimensions**	80 x 41 x 92 mm

Amplifier EM30-AP6X2-H1141/S1102 required

Types and data – selection table

Type	w	d
NI40-CQ80/S1102 5M	w058	d386

w Wiring diagrams on page 658 d Dimension drawing on page 670 Accessories on page 560

+250 °C – EM30 – Amplifier

General data

Connection	male, M12 x 1	**Operating voltage**	10…30 VDC
Output	_\‾‾_, PNP	**Housing material**	V4A (1.4571)
Ambient temperature	-20…+70 °C	**Dimensions**	Ø 30 x 83 mm

Required sensors Ni25-CQ40/S1102 5M or Ni40-CQ80/S1102 5M

Types and data – selection table

Type	w	d
EM30-AP6X2-H1141/S1102	w059	d387

Wiring diagrams on page 658 Dimension drawing on page 670 Accessories on page 560

Inductive sensors for underwater applications

We provide sensors in fully pressure and seawater tight housings for subsea applications. Mounted in plastic M18 threaded barrels, they can even be applied at water depths of up to 500 m. The CP40 sensors are also made for subsea use. They are fully encapsulated in a SG40/2 housing. These types achieve large switching distances, are IP68 rated and made for (fresh) water depths of up to 50 m. They are mostly applied in locks, weirs and offshore areas.

Features

- For continuous use under water
- M18 sensors for water depths of up to 500 m
- CP40 sensors in protective housing for water depths of up to 50 m
- Application compliant housing materials
- Versions with ATEX approval

Properties

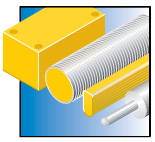

Designs
M18 x 1 threaded barrel, rectangular 40 x 40 mm, mounted in protective housing

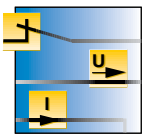

Electrical versions
NAMUR or 3 and 4-wire DC

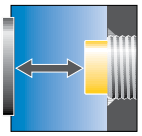

Switching distances
Threaded barrel 5 mm flush or 8 mm non-flush version, rectangular
35 mm non-flush

Materials
Longlife materials, seawater-resistant

Internet link
Scan the QR code to access our products on the internet

Hans Turck GmbH & Co. KG ▪ Tel. +49 208 49 52-0 ▪ Fax +49 208 49 52-264

CP40

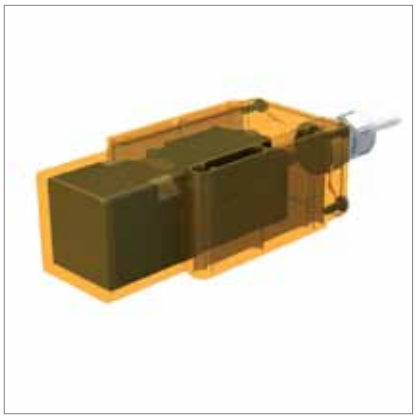

General data

Connection	30 m cable	**Operating voltage**	10…65 VDC
Output	, PNP	**Switching distance**	35 mm,
Housing material	Ultem	**Ambient temperature**	-25…+70 °C
Dimensions	67 x 50 x 190 mm		

Types and data – selection table

Type	w	d
NI35-CP40-VP4X2/S369-F 30M	w060	d388

M18

General data

Connection	2 m cable	**Housing material**	POM
Ambient temperature	-25…+70 °C	**Dimensions**	Ø 18 x 80 mm

Types and data – selection table

Type	Operating voltage	Output	Switching distance	w	d
NI8-P18-Y1/S139	8.2 VDC	NAMUR	8 mm,	w014	d237
BI5-P18-AP6/S139-S90	10…30 VDC	, PNP	5 mm,	w012	d237
NI8-P18-AP6/S139-S90	10…30 VDC	, PNP	8 mm,	w012	d237
BI5-P18-AZ3/S139-S90	20…250 VAC / 10…300 VDC		5 mm,	w028	d237
NI8-P18-AZ3/S139-S90	20…250 VAC / 10…300 VDC		8 mm,	w028	d237

w Wiring diagrams on page 658 d Dimension drawing on page 670 Accessories on page 560

Pressure-resistant sensors

We offer pressure and high-pressure resistant sensors. The *uprox*®+ Washdown sensors resist pressures up to 20 bar, are IP68/IP69K rated and combine the unique *uprox* ® advantages, such as largest switching distance and factor 1 on all metals.
The high-pressure resistant sensors are incorporated in a stainless steel housing and are ideally suited for hydraulic systems. Special seals and additional outer seals at the front as well as an O-ring enable the application in high pressure systems of up to 500 bar.

Features

- M8 and M12 versions up to 20 bar
- M18 up to 15 bar
- M30 up to 10 bar *uprox*®+ Washdown sensors with large switching distance
- Special high pressure resistant sensors up to 500 bar

Properties

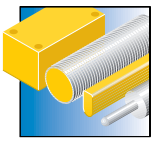

Designs
Thread sizes M8 x 1, M12 x 1, M18 x 1 or M30 x 1.5

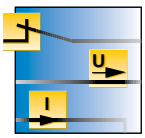

Electrical versions
NO, NC contact or antivalent DC output functions

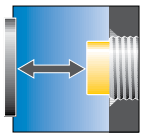

Switching distances
uprox®+ Washdown sensors up to 30 mm; high-pressure resistant sensors up to 2 mm

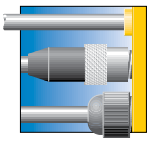

Electrical connections
Cable or male M12

Materials
Stainless steel threaded barrel, shape-stable plastics for active face

Special features
Factor 1 for all metals, temperature range -40…+100 °C

Internet link
Scan the QR code to access our products on the internet

Hans Turck GmbH & Co. KG ▪ Tel. +49 208 49 52-0 ▪ Fax +49 208 49 52-264

M8

General data

Connection	male, M12 x 1	**Operating voltage**	10…30 VDC
Output	, PNP	**Switching distance**	1.5 mm,
Housing material	V4A (1.4404)	**Dimensions**	Ø 8 x 57 mm

Pressure-resistant up to 20 bar

Types and data – selection table

Type	w	d
BI1,5-EG08WD-AP6X-H1341	w013	d027

Many different types available, also as NPN version, see type code

M12

General data

Housing material	V4A (1.4404)

Pressure-resistant up to 20 bar

Types and data – selection table

Type	Connection	Operating voltage	Output	Switching distance	Dimensions	w	d
BI4U-EM12WD-AP6X-H1141	male, M12 x 1	10…30 VDC	, PNP	4 mm,	Ø 12 x 52 mm	w013	d170
NI10U-EM12WD-AP6X-H1141	male, M12 x 1	10…30 VDC	, PNP	10 mm,	Ø 12 x 52 mm	w013	d196
BI4U-EM12WD-AP6X	2 m cable	10…30 VDC	, PNP	4 mm,	Ø 12 x 52 mm	w012	d188
NI10U-EM12WD-AP6X	2 m cable	10…30 VDC	, PNP	10 mm,	Ø 12 x 52 mm	w012	d187
BI4U-EM12EWD-VP44X-H1141	male, M12 x 1	10…55 VDC	, PNP	4 mm,	Ø 12 x 62 mm	w035	d172
NI10U-EM12EWD-VP44X-H1141	male, M12 x 1	10…55 VDC	, PNP	10 mm,	Ø 12 x 62 mm	w035	d175

Many different types available, also as NPN version, see type code

w Wiring diagrams on page 658 d Dimension drawing on page 670 Accessories on page 560

M18

General data

Housing material V4A (1.4404)

Pressure-resistant up to 15 bar

Types and data – selection table

Type	Connection	Operating voltage	Output	Switching distance	Dimensions	w	d
BI8U-EM18WD-AP6X-H1141	male, M12 x 1	10…30 VDC	, PNP	8 mm,	Ø 18 x 52 mm	w013	d202
NI15U-EM18WD-AP6X-H1141	male, M12 x 1	10…30 VDC	, PNP	15 mm,	Ø 18 x 52 mm	w013	d225
BI8U-EM18WD-AP6X	2 m cable	10…30 VDC	, PNP	8 mm,	Ø 18 x 52 mm	w012	d227
NI15U-EM18WD-AP6X	2 m cable	10…30 VDC	, PNP	15 mm,	Ø 18 x 52 mm	w012	d228
BI8U-EM18MWD-VP44X-H1141	male, M12 x 1	10…55 VDC	, PNP	8 mm,	Ø 18 x 61.5 mm	w035	d212
NI15U-EM18MWD-VP44X-H1141	male, M12 x 1	10…55 VDC	, PNP	15 mm,	Ø 18 x 61.5 mm	w035	d214

Many different types available, also as NPN version, see type code

M18 – High pressure resistant

General data

Operating voltage 10…30 VDC

Switching distance 2 mm,

Dimensions Ø 18 x 58 mm

Output , PNP

Housing material V2A (1.4305)

Pressure resistant up to 500 bar (S212) resp. 100 bar (S220)

Types and data – selection table

Type	Connection	w	d
BID2-G180-AP6-H1141/S220	male, M12 x 1	w013	d389
BID2-G180-AP6-H1141/S212	male, M12 x 1	w013	d389
BID2-G180-AP6/S220	2 m cable	w012	d390
BID2-G180-AP6/S212	2 m cable	w012	d390

M30

General data

Housing material	V4A (1.4404)	**Ambient temperature**	-40…+100 °C

Pressure-resistant up to 10 bar

Types and data – selection table

Type	Connection	Operating voltage	Output	Switching distance	Dimensions	w	d
BI15U-EM30WD-AP6X-H1141	male, M12 x 1	10…30 VDC	, PNP	15 mm,	Ø 30 x 62 mm	w013	d243
NI30U-EM30WD-AP6X-H1141	male, M12 x 1	10…30 VDC	, PNP	30 mm,	Ø 30 x 62 mm	w013	d258
BI15U-EM30WD-AP6X	2 m cable	10…30 VDC	, PNP	15 mm,	Ø 30 x 66 mm	w012	d260
NI30U-EM30WD-AP6X	2 m cable	10…30 VDC	, PNP	30 mm,	Ø 30 x 66 mm	w012	d368
BI15U-EM30WD-VP44X-H1141	male, M12 x 1	10…55 VDC	, PNP	15 mm,	Ø 30 x 62 mm	w035	d243
NI30U-EM30WD-VP44X-H1141	male, M12 x 1	10…55 VDC	, PNP	30 mm,	Ø 30 x 62 mm	w035	d258

Many different types available, also as NPN version, see type code

w Wiring diagrams on page 658 d Dimension drawing on page 670 Accessories on page 560

Selective sensors

TURCK's sensor series NF and FE and are particularly suited for applications in which ferritic metals have to be distinguished from non-ferritic ones. They distinguish for example between workpiece and tool or between workpieces made of different materials and perform simple coding tasks.

Features

- Switching outputs for the detection of different materials
- NF with output for non-ferritic metals
- FE with output for ferritic metals
- Stainless steel housing
- Large switching distance also on non-ferritic metals
- Highly immune to interference

Properties

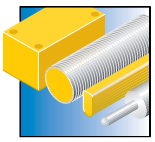

Designs
12, 18 and 30 mm threaded barrels as well as 40 x 40 mm rectangular housings

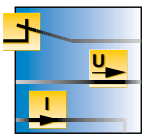

Electrical versions
3-wire DC for threaded barrels; 4-wire DC/2-wire AC for rectangular types

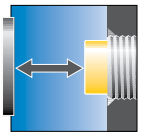

Switching distances
Distinction of ferrous metals up to 5 mm; distinction of non-ferrous metals up to 20 mm

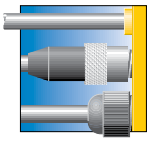

Electrical connections
Threaded barrel with male M12, rectangular version with terminal chamber

Internet link
Scan the QR code to access our products on the internet

Hans Turck GmbH & Co. KG ▪ Tel. +49 208 49 52-0 ▪ Fax +49 208 49 52-264

CP40

General data

Connection	Terminal chamber	**Operating voltage**	10…65 VDC
Output	, PNP	**Switching distance**	20 mm,
Housing material	PBT	**Dimensions**	40 x 40 x 114 mm

Variable orientation of active face in 9 directions

Types and data – selection table

Type	w	d
NI20NF-CP40-VP4X2	w023	d391

Many different types available, also as NPN version, see type code

M12

General data

Connection	male, M12 x 1	**Operating voltage**	10…30 VDC
Output	, PNP	**Housing material**	V2A (1.4301)

Types and data – selection table

Type	Switching distance	Dimensions	w	d
BI3NF-EM12HE-AP6X2-H1141	3 mm,	Ø 12 x 62 mm	w013	d173
BI2,5FE-EM12FE-AP6X-H1141	2.5 mm,	Ø 12 x 60 mm	w013	d392

Many different types available, also as NPN version, see type code

w Wiring diagrams on page 658 d Dimension drawing on page 670 Accessories on page 560

M18

General data

Connection	male, M12 x 1	**Operating voltage**	10…30 VDC
Output	__, PNP	**Switching distance**	5 mm,
Housing material	V2A (1.4301)	**Dimensions**	Ø 18 x 72 mm

Types and data – selection table

Type	w	d
BI5NF-EM18HE-AP6X2-H1141	w013	d223

Many different types available, also as NPN version, see type code

M30

General data

Connection	male, M12 x 1	**Operating voltage**	10…30 VDC
Output	__, PNP	**Switching distance**	10 mm,
Housing material	V2A (1.4301)	**Dimensions**	Ø 30 x 77 mm

Types and data – selection table

Type	w	d
BI10NF-EM30HE-AP6X2-H1141	w013	d393

Many different types available, also as NPN version, see type code

Wiring diagrams on page 658 Dimension drawing on page 670 Accessories on page 560

Capacitive sensors

Rectangular design, high-performance technology within the smallest space

Capacitive sensors operate contactless, reactionless and wear-free. Capacitive proximity switches are highly sensitive and designed for non-contact and wear-free detection of electrically conductive as well as non-conductive metal objects. They measure filling levels of liquids or bulk goods either in direct contact with the medium or through a metallic container wall. In addition to positioning measurement, the sensors are also deployed for control of overflow and leakage as well as run-dry protection of pumps.
TURCK offers them as threaded barrel types mounted in a plastic or metal housing and as rectangular types that are easily mounted and fit in almost every space.
The type of application and the environmental conditions play a key role in choosing the right sensor. TURCK meets these requirements and offers capacitive sensors for the most diverse demands, such as high temperatures, aggressive media or explosion hazardous environments. As well as types comply with the application typical demands, such as those of the food or pharmaceutical industry for example.
The BCF series is designed for applications exposed to strong interference. In addition, the BCF sensors operate reliable, even with adherent and conductive liquid films on the active face. The BCC series is especially suited for powders and granulates with a very low dielectric constant. These sensors are especially shielded against interferences and electrostatic discharge and maintain the switching distance even when flush mounted in metal containers.

Our strengths – Your advantages

New close-up range suppression

Capacitive sensors react to all materials with a permittivity greater than 1. This may lead to interferences during operation in the event of wetting, condensation or icing on the sensor surface. Residue and humidity may also lead to detection failures. In order to rule out this effect, a signal is produced with an electrode close to the sensor surface, antagonizing the main signal. A zone is thus created near the electrode in which dirt and humidity are not detected by the sensor. Based on the new technology, the close-up range suppression of TURCK sensors works also with conductive adhesion.

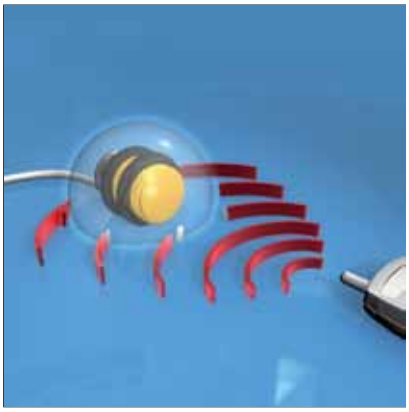

All-round protection against interferences

Capacitive sensors work reliably and safe, even under rough environmental conditions. Special protective measures ensure failsafe operation of the sensors when exposed to high electromagnetic interference. The sensors are also ESD immune. Automatic wetting compensation eliminates moreover interferences caused by wetting and condensation.

Wear-free detection of conducting and non-conducting materials.

Capacitive proximity sensors are designed for contactless and wear-free detection of electrically conducting and non-conducting objects. These all-rounders are thus suited for many applications. In addition to distance and position, capacitive sensors measure deflection, thickness, eccentricity, concentricity, deformation, wear, vibration and above all filling levels of liquid and solid substances.

Hans Turck GmbH & Co. KG ▪ Tel. +49 208 49 52-0 ▪ Fax +49 208 49 52-264

Your advantages

Cylindrical design, metal or plastic version

Whether metal or plastic housing, the product range of standard cylindrical sensors is large, offering devices with diameters between 12 mm and 40 mm. The flush mountable sensors generate an almost linear detection field.

Besides the usual reliability, capacitive TURCK sensors feature standard functions such as automatic wetting compensation, excellent EMC and ESD properties and they are flexibly mounted.

Rectangular design, high-performance technology within the smallest space

The rectangular devices offer high-quality components and high functionality in a rugged housing. These sensors moreover convince through easy and convenient handling. The prescribed free zones are considerably smaller, lowering the construction effort while enhancing the system availability. You save time and money.

Inductive sensors for special applicat

BCF sensors for demanding applications

Conventional sensors do not operate reliably in demanding applications. Residue and humidity on the active face may inhibit proper operation of the sensor. These problems are now ruled out with the new BCF series. Even conductive adhesion is not a problem anymore, thanks to the new technology.

The sensors are immune to radiated and conducted HF interference, burst as well as electrostatic discharge (ESD).

- Suited for highly viscous media
- Increased EMI shielding (even with high frequency equipment)

Page 184

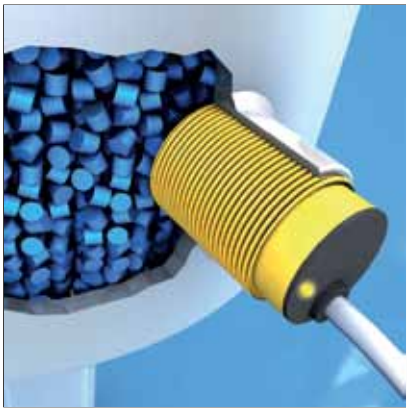

BCC sensors for level control

The BCC sensors blank out all interferences during the monitoring process: They are EMC and ESD immune. A laterally mounted shield and an integrated processing unit inhibit pre-attenuation when mounted in metal flanges. The full switching distance is thus exploitable.

- Even smallest pellets are detected
- Same switching distance, even when mounted in metal barrels
- Excellent EMC and ESD properties

Page 188

NAMUR sensors

The available NAMUR sensors are approved for the zones 0 and 1. They are polarized 2-wire devices, changing their internal resistance in dependence on the attenuation (continuous linear/current characteristic). They can be connected to external switching amplifiers which convert current variations into binary output signals. The advantage: With an approved switching amplifier, they can be applied in Ex-areas. Continuous monitoring of wire-break and short-circuit via the switching amplifier is possible.

Hans Turck GmbH & Co. KG ▪ Tel. +49 208 49 52-0 ▪ Fax +49 208 49 52-264

ions

or special applications

AC 2-wire sensors

Capacitive AC 2-wire sensors are available as M12, M18, M30 and CK40 types. The 2-wire sensors can be used to replace mechanical switches in existing systems. The established wiring, normally two wires, can still be used. The advantage is, compared to 3-wire switching elements, the reduced wiring complexity.

Chemical resistant sensors

The capacitive sensors (PVDF) are the ideal solution for any application of the pharmaceutical, chemical or food industry. They help to optimize all kinds of applications for instance in dairies, breweries, industrial bakeries, frozen food production, packaging and filling machinery. PVDF materials belong to the group of fluoride plastics. They are extremely resistant due to the high fluorine content. They also feature a high creep strength under constant load as well as good heat and cold properties.

High-temperature resistant sensors

A growing number of applications require sensors resisting temperatures beyond the standard range of -25…+70 °C. For this purpose TURCK has developed capacitive sensors which meet exactly these requirements. The sensors feature temperature resistant components as well as cleverly designed passive cooling concepts, approved in demanding laboratory tests. These sensors resist temperatures from -25 °C to +100 °C.

Type code

B	C	F	5	–	M12	K	–	A	P	6	X	–	H1	1	4	1	/	S250

B	C	F	5	Functional principle	–	M12	K	Design	–	A	P	6	X	Electrical version	–

Rated operating distance

…	distance Sn in [mm]

Special function

C	predamping protection
F	close-up range suppression

Functional principle

C	capacitive

Fitting

B	flush
N	non-flush

Additional Information

K	short-sized housing
WD	wash down, resistant to aggressive cleaning agents, protection class IP69K
SR, TC	terminal chamber with straight or angled cable outlet

Housing

CP40	rectangular, (40 x 40 mm) active face flexible
CP80	rectangular, (80 x 80 mm)
K	smooth barrel, plastic
KT	smooth barrel, plastic, PTFE-coated
M	threaded barrel,metal, Ø in [mm]
S	barrel, plastic continuous thread
PT	threaded barrel, plastic, PTFE-coated
Q	rectangular, height and Ø in [mm]
QF	rectangular flat, height in [mm]

Indication

X	LED
X...	number of LEDs or multicolor LED

Voltage range

3	10…300 VDC / 20…250 VAC
4	10…65 VDC, short-circuit proof
6	10…30 VDC, short-circuit proof

Output mode

N	NPN
P	PNP
Z	2-wire AC/DC

Output function

A	working current NO
F	working current NO/ closed current NC programmable via connection
R	closed current NC
V	changeover contact
Y0, Y1	output acc. to EN 60947-5-6 (NAMUR)

H1	1	4	1	Electrical connection: connector	/	S250	Special version

Assignment

1 standard assigment, or customized

Number of contacts

4 contacts

Connector type

1 straight

3 straight, with adapter

Connector type

B3 connector 1/2"

H1 connector M12 x 1

V1 connector M8 x 1 / Ø 8 mm

Features

S90 PUR cable

S100 extended temperature range

S250 fixed settings

3GD approval ATEX II 3 G and II 3D

...M	Cable connection	/

Cable connection

...M cable length [m]

Designs and variants

	Design	Switching distance	Electrical connection	Output	Page
QF5,5	rectangular QF5,5 20.3 x 5.5 x 54 mm	10 mm, 5 mm,	2 m cable	, PNP , NPN , PNP NAMUR , NPN	169
Q08	rectangular Q08 20 x 8 x 32 mm	5 mm,	connector, Ø8 mm 2 m cable	, PNP , NPN , PNP , NPN	169
Q10	rectangular Q10 25 x 10.8 x 42 mm	8 mm,	2 m cable connector	, PNP , NPN , PNP , NPN	170
Q14	rectangular Q14 30 x 14 x 55.5 mm	10 mm,	2 m cable connector, M8 x 1	, PNP , NPN , PNP , PNP	170
Q20	rectangular Q20 40 x 20 x 68 mm	20 mm,	connector, M12 x 1 2 m cable connector, M8 x 1	, PNP , NPN , PNP , NPN , PNP , 2-wire , 2-wire	171
CP40	rectangular CP40 40 x 40 x 114 mm	20 mm,	terminal chamber connector, M12 x 1	, PNP , NPN , , 2-wire	171
CP80	rectangular CP80 80 x 40.5 x 80 mm	50 mm,	terminal chamber connector, M12 x 1	, PNP , NPN , , 2-wire	172
M12	threaded barrel M12 x 1 Ø 12 x 63.5 mm Ø 12 x 70 mm	3 mm,	2 m cable connector, M12 x 1	, PNP , NPN , PNP	175

Hans Turck GmbH & Co. KG ▪ Tel. +49 208 49 52-0 ▪ Fax +49 208 49 52-264

ts and variants

	Design	Switching distance	Electrical connection	Output	Page
M18	threaded barrel M18 x 1 Ø 18 x 83 mm Ø 18 x 74 mm	5 mm,	connector, M12 x 1 2 m cable	, PNP , NPN , PNP , 2-wire , 2-wire	175
M30	threaded barrel M30 x 1.5 Ø 30 x 60 mm Ø 30 x 62.5 mm	10 mm,	connector, M12 x 1 2 m cable	, PNP , NPN , 2-wire , 2-wire	176
S12	threaded barrel M12 x 1 Ø 12 x 63 mm	3 mm,	2 m cable	, PNP , NPN , PNP	179
S18	threaded barrel M18 x 1 Ø 18 x 83 mm Ø 18 x 74 mm	5 mm,	connector, M12 x 1 2 m cable	, PNP , NPN , PNP , NPN , 2-wire , 2-wire NAMUR	179
S185	threaded barrel M18 x 1 Ø 18 x 74.5 mm	5 mm,	2 m cable	, PNP , NPN	180
S30	threaded barrel M30 x 1.5 Ø 30 x 60 mm Ø 30 x 62.5 mm	10 mm,	connector, M12 x 1 2 m cable	, PNP , NPN , 2-wire , 2-wire NAMUR	180
P30SR	threaded barrel M30 x 1.5 Ø 30 x 115 mm	10 mm,	terminal chamber	, PNP , NPN , , 2-wire	181
PT30	threaded barrel M30 x 1.5 Ø 30 x 80 mm	10 mm,	2 m cable	, PNP , NPN	181

Designs and variants

	Design	Switching distance	Electrical connection	Output	Page
K34	smooth barrel 34 mm Ø 34 x 60 mm Ø 34 x 80 mm	15 mm,	connector, M12 x 1 2 m cable	, PNP , NPN , PNP , NPN , 2-wire , 2-wire	182
K34SR	smooth barrel 34 mm Ø 34 x 106 mm	15 mm,	terminal chamber	, PNP , NPN , , 2-wire	182
KT34	smooth barrel 34 mm Ø 34 x 80 mm	20 mm,	2 m cable	, PNP , NPN	183
K40SR	smooth barrel 40 mm Ø 40 x 90 mm	20 mm,	terminal chamber connector, M12 x 1	, PNP , NPN	183
K40WDTC	smooth barrel 40 mm Ø 40 x 91 mm	20 mm,	terminal chamber, removablee cage clamp terminals	, PNP	183
BCF – S18	threaded barrel M18 x 1 Ø 18 x 74 mm Ø 18 x 83 mm	5 mm,	2 m cable connector, M12 x 1	, PNP , NPN , NPN	185
BCF – S30	threaded barrel M30 x 1.5 Ø 30 x 62.5 mm Ø 30 x 60 mm	10 mm,	2 m cable connector, M12 x 1	, PNP , NPN , 2-wire , 2-wire	185
BCF – K34	smooth barrel 34 mm Ø 34 x 80 mm	15 mm,	2 m cable	, 2-wire , 2-wire	186

Hans Turck GmbH & Co. KG ▪ Tel. +49 208 49 52-0 ▪ Fax +49 208 49 52-264

	Design	Switching distance	Electrical connection	Output	Page
BCF – Q20L60	rectangular Q20L60 30 x 20 x 60 mm	10 mm,	2 m cable connector, M12 x 1	, PNP	186
BCC – S30	threaded barrel M30 x 1.5 Ø 30 x 62.5 mm Ø 30 x 60 mm	10 mm,	2 m cable connector, M12 x 1	, PNP , PNP , PNP	189
BCC – S30WD	threaded barrel M30 x 1.5 Ø 30 mm	10 mm,	connector, M12 x 1	, PNP	189

Rectangular designs

Rectangular shaped capacitive sensors are the compact solution for your facilities. The rugged housing and high-quality components provide additional options for installation and detection. The 8 mm Q08 as well as the variable CP80 convince through easy mounting and short blind zones.
The rectangular types thus simplify the assembly and enhance the operability of your systems.

Features

- Stable and resistant housings
- Large switching distances
- Excellent EMC properties
- Easy to mount
- Connector and cable versions

Properties

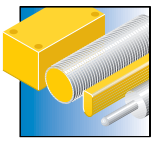

Designs
All designs available, from the flat 5.5 mm QF5.5 up to the big sized 80 x 40.5 x 80 mm CP80

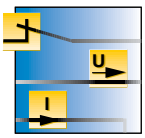

Electrical versions
3-wire and 4-wire DC, as well as 2-wire AC and NAMUR devices, PNP and NPN switching; NO, NC contact or with antivalent switching output

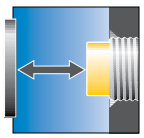

Switching distances
5 mm versions for close-range detection, 50 mm versions for long ranges

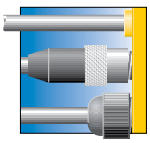

Electrical connections
2 m cable PVC or PUR, male M8 x 1, Ø 8 mm and M12 x 1 or terminal chamber

Materials
Rugged and chemical resistant plastic and metal housings

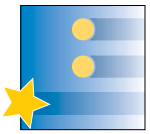

Special features
Fine adjustment via potentiometer,

Internet link
Scan the QR code to access our products on the internet

Hans Turck GmbH & Co. KG ▪ Tel. +49 208 49 52-0 ▪ Fax +49 208 49 52-264

QF5,5

General data

Connection	2m cable	**Housing material**	PP
Ambient temperature	-25…+70 °C	**Dimensions**	20.3 x 5.5 x 54 mm

Types and data – selection table

Type	Operating voltage	Output	Switching distance	Approvals	Operating current [mA]	Adjustment	w	d
BC10-QF5,5-AP6X2	10…30 VDC	, PNP	10 mm,	–	200, Ⓚ	Potentiometer	w061	d394
BC10-QF5,5-RP6X2	10…30 VDC	, PNP	10 mm,	–	200, Ⓚ	Potentiometer	w062	d394
BC5-QF5,5-Y1X/S250	8.2 VDC	NAMUR	5 mm,	Ex II 2 G Ex II 1 D SIL2	–	fixed	w063	d395

Many different types available, also as NPN version, see type code

Q08

General data

Operating voltage	10…30 VDC	**Switching distance**	5 mm,
Housing material	GD-Zn	**Operating current [mA]**	200, Ⓚ
Ambient temperature	-25…+70 °C	**Dimensions**	20 x 8 x 32 mm
Adjustment	fixed		

Types and data – selection table

Type	Connection	Output	w	d
BC5-Q08-AP6X2-V1131/S250	male, Ø 8 mm	, PNP	w064	d396
BC5-Q08-AP6X2/S250	2 m cable	, PNP	w061	d397
BC5-Q08-RP6X2/S250	2 m cable	, PNP	w062	d397
BC5-Q08-RP6X2-V1131/S250	male, Ø 8 mm	, PNP	w066	d396

Many different types available, also as NPN version, see type code

w Wiring diagrams on page 658 d Dimension drawing on page 670 Accessories on page 560

Q10

General data

Operating voltage	10…30 VDC	**Switching distance**	8 mm,
Housing material	PBT	**Operating current [mA]**	200, Ⓚ
Ambient temperature	-25…+70 °C	**Dimensions**	25 x 10.8 x 42 mm
Adjustment	fixed		

Types and data – selection table

Type	Connection	Output	w	d
BC8-Q10-AP6X2/S250	2 m cable	, PNP	w061	d398
BC8-Q10-RP6X2/S250	2 m cable	, PNP	w062	d398
BC8-Q10-AP6X2-V1131/S250	male	, PNP	w064	d399
BC8-Q10-RP6X2-V1131/S250	male	, PNP	w066	d399

Many different types available, also as NPN version, see type code

Q14

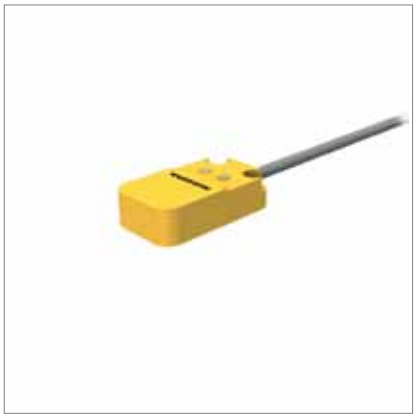

General data

Operating voltage	10…65 VDC	**Switching distance**	10 mm,
Housing material	PBT	**Operating current [mA]**	200, Ⓚ
Ambient temperature	-25…+70 °C	**Dimensions**	30 x 14 x 55.5 mm
Adjustment	Potentiometer		

Types and data – selection table

Type	Connection	Output	w	d
BC10-Q14-AP4X2	2 m cable	, PNP	w061	d400
BC10-Q14-VP4X2	2 m cable	, PNP	w067	d400
BC10-Q14-RP4X2	2 m cable	, PNP	w062	d400
BC10-Q14-AP4X2-V1131	male, M8 x 1	, PNP	w064	–

Many different types available, also as NPN version, see type code

Q20

General data

Switching distance	20 mm,	**Housing material**	PBT
Ambient temperature	-25…+70 °C	**Dimensions**	40 x 20 x 68 mm
Adjustment	Potentiometer		

Types and data – selection table

Type	Connection	Operating voltage	Output	Operating current [mA]	w	d
BC20-Q20-AP4X2-H1141	male, M12 x 1	10…65 VDC	, PNP	200, Ⓚ	w064	d401
BC20-Q20-AP4X2	2 m cable	10…65 VDC	, PNP	200, Ⓚ	w061	d402
BC20-Q20-RP4X2	2 m cable	10…65 VDC	, PNP	200, Ⓚ	w062	d402
BC20-Q20-RP4X2-V1131	male, M8 x 1	10…65 VDC	, PNP	200, Ⓚ	w066	d403
BC20-Q20-VP4X2-H1141	male, M12 x 1	10…65 VDC	, PNP	200, Ⓚ	w069	d401
BC20-Q20-AZ3X2	2 m cable	20…250 VAC	, 2-wire	–	w071	d402
BC20-Q20-RZ3X2	2 m cable	20…250 VAC	, 2-wire	–	w072	d402

Many different types available, also as NPN version, see type code

CP40

General data

Switching distance	20 mm,	**Housing material**	PBT
Ambient temperature	-25…+70 °C	**Dimensions**	40 x 40 x 114 mm
Adjustment	Potentiometer		

Variable orientation of active face in 9 directions

Types and data – selection table

Type	Connection	Operating voltage	Output	Operating current [mA]	w	d
BC20-CP40-VP4X2	Terminal chamber	10…65 VDC	, PNP	200, Ⓚ	w073	d404
BC20-CP40-VP4X2-H1141	male, M12 x 1	10…65 VDC	, PNP	200, Ⓚ	w069	d405
BC20-CP40-FZ3X2	Terminal chamber	20…250 VAC	connection programmable, 2-wire	–	w074	d404

Many different types available, also as NPN version, see type code

w Wiring diagrams on page 658 d Dimension drawing on page 670 Accessories on page 560

CP80

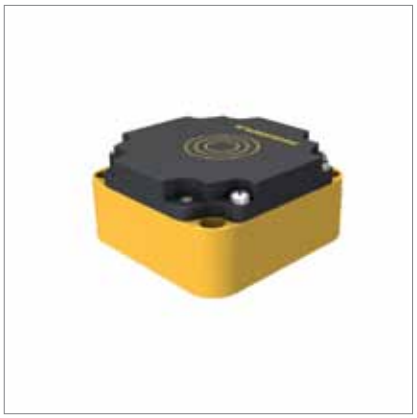

General data

Switching distance	50 mm,	**Housing material**	PBT
Ambient temperature	-25…+70 °C	**Dimensions**	80 x 40.5 x 80 mm
Adjustment	Potentiometer		

Types and data – selection table

Type	Connection	Operating voltage	Output	Operating current [mA]	w	d
NC50-CP80-VP4X2	Terminal chamber	10…65 VDC	, PNP	200, Ⓚ	w073	d406
NC50-CP80-VP4X2-H1141	male, M12 x 1	10…65 VDC	, PNP	200, Ⓚ	w069	d407
NC50-CP80-FZ3X2	Terminal chamber	20…250 VAC	, , 2-wire	–	w074	d406

Many different types available, also as NPN version, see type code

Wiring diagrams on page 658 Dimension drawing on page 670 Accessories on page 560

Cylindrical designs - Metal

Cylindrically shaped capacitive sensors feature high switching distances and are available in many different designs. M12, M18 and M30 chrome-plated threaded barrels are available with connection cable or male connection. Besides the usual reliability, capacitive sensors feature standard properties such as automatic wetting compensation, excellent EMC and ESD properties and more flexibility with respect to mounting.

Features

- Excellent reliability
- Automatic wetting compensation
- Excellent EMC properties
- ESD immunity
- Mounting flexibility

Properties

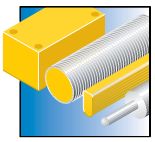

Designs
Threaded barrel M12 x 1, M18 x 1 and M30 x 1.5

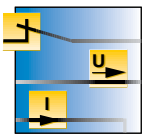

Electrical versions
2-wire AC, 3-wire and 4-wire DC, PNP or NPN switching; NO/NC contact as well as with antivalent switching output

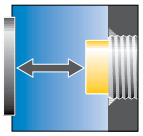

Switching distances
From 3 mm flush to 10 mm non-flush on all metals and non-metals

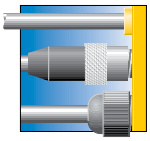

Electrical connections
2 m connection cable or male M12 x 1

Materials
Threaded barrels, chrome-plated brass

Special features
Fine adjustment via potentiometer, protection class IP67

Internet link
Scan the QR code to access our products on the internet

Hans Turck GmbH & Co. KG ▪ Tel. +49 208 49 52-0 ▪ Fax +49 208 49 52-264

M12

General data

Operating voltage	10…30 VDC	**Switching distance**	3 mm,
Housing material	CuZn, chrome-plated	**Operating current [mA]**	200, Ⓚ
Ambient temperature	-25…+70 °C	**Adjustment**	Potentiometer

Types and data – selection table

Type	Connection	Output	Approvals	Dimensions	w	d
BC3-M12-AP6X	2 m cable	, PNP	–	Ø 12 x 63.5 mm	w061	d408
BC3-M12-RP6X	2 m cable	, PNP	–	Ø 12 x 63.5 mm	w062	d408
BC3-M12-AP6X-H1141	male, M12 x 1	, PNP	–	Ø 12 x 70 mm	w064	d409
BC3-M12-AP6X/S90/3GD	2 m cable	, PNP	Ex II 3 G Ex II 3 D	Ø 12 x 63.5 mm	w061	d408

Many different types available, also as NPN version, see type code

M18

General data

Switching distance	5 mm,	**Housing material**	CuZn, chrome-plated
Ambient temperature	-25…+70 °C		

Types and data – selection table

Type	Connection	Operating voltage	Output	Operating current [mA]	Dimensions	Adjustment	w	d
BC5-M18-AP4X-H1141/S250	male, M12 x 1	10…65 VDC	, PNP	200, Ⓚ	Ø 18 x 83 mm	fixed	w064	d410
BC5-M18-RP4X-H1141/S250	male, M12 x 1	10…65 VDC	, PNP	200, Ⓚ	Ø 18 x 83 mm	fixed	w075	d410
BC5-M18-AP4X	2 m cable	10…65 VDC	, PNP	200, Ⓚ	Ø 18 x 74 mm	Potentiometer	w061	d411
BC5-M18-RP4X	2 m cable	10…65 VDC	, PNP	200, Ⓚ	Ø 18 x 74 mm	Potentiometer	w062	d411
BC5-M18-AZ3X	2 m cable	20…250 VAC	, 2-wire	–	Ø 18 x 74 mm	Potentiometer	w076	d411
BC5-M18-RZ3X	2 m cable	20…250 VAC	, 2-wire	–	Ø 18 x 74 mm	Potentiometer	w077	d411

Many different types available, also as NPN version, see type code

w Wiring diagrams on page 658 d Dimension drawing on page 670 Accessories on page 560

M30

General data

Switching distance	10 mm,	**Housing material**	CuZn, chrome-plated
Ambient temperature	-25…+70 °C	**Adjustment**	Potentiometer

Types and data – selection table

Type	Connection	Operating voltage	Output	Operating current [mA]	Dimensions	w	d
BC10-M30K-VP4X-H1141	male, M12 x 1	10…65 VDC	, PNP	200, Ⓚ	Ø 30 x 60 mm	w069	d412
BC10-M30K-VP4X	2 m cable	10…65 VDC	, PNP	200, Ⓚ	Ø 30 x 62.5 mm	w067	d413
BC10-M30K-RZ3X	2 m cable	20…250 VAC	, 2-wire	–	Ø 30 x 62.5 mm	w077	d413
BC10-M30K-AZ3X	2 m cable	20…250 VAC	, 2-wire	–	Ø 30 x 62.5 mm	w076	d413

Many different types available, also as NPN version, see type code

Wiring diagrams on page 658 Dimension drawing on page 670 Accessories on page 560

Cylindrical designs - Plastic

Cylindrically shaped capacitive sensors feature high switching distances and are available in many different designs. The standard types come in plastic housings and sizes from Ø 12 mm to Ø 40 mm, with connection cable, male or terminal chamber.
Besides the usual reliability, capacitive sensors feature standard properties such as automatic wetting compensation, excellent EMC and ESD properties and more flexibility with respect to mounting.

Features

- Excellent reliability
- Automatic wetting compensation
- Excellent EMC properties
- ESD immunity
- Mounting flexibility

Properties

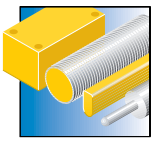

Designs
Cylindrical designs M12 x 1, M18 x 1, M30 x 1.5, Ø 34 mm and Ø 40 mm

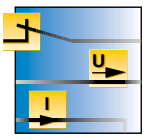

Electrical versions
3-wire DC and 4-wire DC, as well as 2-wire AC and NAMUR devices, PNP and NPN switching; NO, NC contact or with antivalent switching output

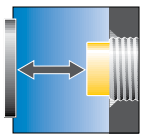

Switching distances
From 3 mm to 20 mm flush mountable on all metals and non-metals

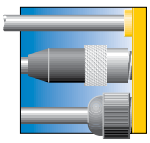

Electrical connections
2 m cable, male M12 x 1 or terminal chamber

Materials
Plastic housings PA, PBT, PVDF and ABS

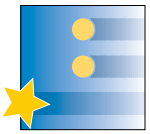

Special features
Fine adjustment via potentiometer, protection class IP68 or IP69K

Internet link
Scan the QR code to access our products on the internet

Hans Turck GmbH & Co. KG ▪ Tel. +49 208 49 52-0 ▪ Fax +49 208 49 52-264

S12

General data

Connection	2 m cable	**Operating voltage**	10…30 VDC
Switching distance	4.5 mm,	**Housing material**	PA12-GF30
Operating current [mA]	200, Ⓚ	**Dimensions**	Ø 12 x 63 mm
Adjustment	Potentiometer		

Types and data – selection table

Type	Output	Approvals	Ambient temperature	w	d
BC3-S12-AP6X	, PNP	–	-25…+70 °C	w061	d414
BC3-S12-RP6X	, PNP	–	-25…+70 °C	w062	d414
BC3-S12-AP6X/S100	, PNP	–	-25…+100 °C	w061	d414
BC3-S12-RP6X/S90/3GD	, PNP	Ex II 3 G Ex II 3 D	-25…+70 °C	w062	d414

Many different types available, also as NPN version, see type code

S18

General data

Housing material	PA12-GF30	**Ambient temperature**	-25…+70 °C

Types and data – selection table

Type	Connec-tion	Operating voltage	Output	Switching distance	Approvals	Operating current [mA]	Dimen-sions	Adjustment	w	d
BC5-S18-AP4X-H1141/S250	male, M12 x 1	10…65 VDC	, PNP	5 mm,	–	200, Ⓚ	Ø 18 x 83 mm	fixed	w064	d415
BC5-S18-RP4X-H1141/S250	male, M12 x 1	10…65 VDC	, PNP	5 mm,	–	200, Ⓚ	Ø 18 x 83 mm	fixed	w075	d415
BC5-S18-AP4X	2 m cable	10…65 VDC	, PNP	7.5 mm,	–	200, Ⓚ	Ø 18 x 74 mm	Potentiometer	w061	d416
BC5-S18-RP4X	2 m cable	10…65 VDC	, PNP	7.5 mm,	–	200, Ⓚ	Ø 18 x 74 mm	Potentiometer	w062	d416
BC5-S18-AZ3X	2 m cable	20…250 VAC	, 2-wire	7.5 mm,	–	–	Ø 18 x 74 mm	Potentiometer	w071	d416
BC5-S18-RZ3X	2 m cable	20…250 VAC	, 2-wire	7.5 mm,	–	–	Ø 18 x 74 mm	Potentiometer	w072	d416

Table continues on the next page…

w Wiring diagrams on page 658 d Dimension drawing on page 670 Accessories on page 560

… Table starts on previous page

Type	Connec-tion	Operating voltage	Output	Switching distance	Approvals	Operating current [mA]	Dimen-sions	Adjustment	w	d
BC5-S18-Y1X	2 m cable	8.2 VDC	NAMUR	7.5 mm,	Ex II 2 G Ex II 1 D SIL2	–	Ø 18 x 74 mm	Potentiometer	w063	d416

Many different types available, also as NPN version, see type code

S185

General data

Connection	2 m cable	**Operating voltage**	10…65 VDC
Output	, PNP	**Switching distance**	7.5 mm,
Housing material	PVDF	**Operating current [mA]**	200, K
Dimensions	Ø 18 x 74.5 mm	**Adjustment**	Potentiometer

Types and data – selection table

Type	Ambient temperature	w	d
BC5-S185-AP4X	-25…+70 °C	w061	d417
BC5-S185-AP4X/S100	-25…+100 °C	w061	d417

Many different types available, also as NPN version, see type code

S30

General data

Switching distance	15 mm,	**Housing material**	PA12-GF30
Ambient temperature	-25…+70 °C	**Adjustment**	Potentiometer

Types and data – selection table

Type	Connection	Operating voltage	Output	Approvals	Operating current [mA]	Dimensions	w	d
BC10-S30-VP4X-H1141	male, M12 x 1	10…65 VDC	, PNP	–	200, K	Ø 30 x 60 mm	w069	d418
BC10-S30-VP4X	2 m cable	10…65 VDC	, PNP	–	200, K	Ø 30 x 62.5 mm	w067	d419
BC10-S30-AZ3X	2 m cable	20…250 VAC	, 2-wire	–	–	Ø 30 x 62.5 mm	w071	d419
BC10-S30-RZ3X	2 m cable	20…250 VAC	, 2-wire	–	–	Ø 30 x 62.5 mm	w072	d419
BC10-S30-Y1X	2 m cable	8.2 VDC	NAMUR	Ex II 2 G Ex II 1 D SIL2	–	Ø 30 x 62.5 mm	w063	d419

Many different types available, also as NPN version, see type code

P30SR

General data

Connection	Terminal chamber	**Switching distance**	15 mm,
Housing material	ABS	**Ambient temperature**	-25…+70 °C
Dimensions	Ø 30 x 115 mm	**Adjustment**	Potentiometer

Types and data – selection table

Type	Operating voltage	Output	Approvals	Operating current [mA]	w	d
BC10-P30SR-VP4X2	10…65 VDC	, PNP	–	200, Ⓚ	w073	d420
BC10-P30SR-VP4X2/3GD	10…65 VDC	, PNP	Ex II 3 G Ex II 3 D	200, Ⓚ	w073	d420
BC10-P30SR-FZ3X2	20…250 VAC	connection programmable, 2-wire	–	–	w074	d420

Many different types available, also as NPN version, see type code

PT30

General data

Connection	2 m cable	**Operating voltage**	10…65 VDC
Output	, PNP	**Switching distance**	15 mm,
Housing material	PVDF	**Operating current [mA]**	200, Ⓚ
Ambient temperature	-25…+70 °C	**Dimensions**	Ø 30 x 80 mm
Adjustment	Potentiometer		

Types and data – selection table

Type	w	d
BC10-PT30-VP4X2	w067	d421

Many different types available, also as NPN version, see type code

w Wiring diagrams on page 658 d Dimension drawing on page 670 Accessories on page 560

K34

General data

Switching distance	22.5 mm,	**Housing material**	PBT
Ambient temperature	-25…+70 °C	**Adjustment**	Potentiometer

Types and data – selection table

Type	Connection	Operating voltage	Output	Operating current [mA]	Dimensions	w	d
BC15-K34-AP4X-H1141	male, M12 x 1	10…65 VDC	, PNP	200, Ⓚ	Ø 34 x 60 mm	w064	d422
BC15-K34-VP4X	2 m cable	10…65 VDC	, PNP	200, Ⓚ	Ø 34 x 80 mm	w067	d423
BC15-K34-AZ3X	2 m cable	20…250 VAC	, 2-wire	–	Ø 34 x 80 mm	w071	d423
BC15-K34-RZ3X	2 m cable	20…250 VAC	, 2-wire	–	Ø 34 x 80 mm	w072	d423

Many different types available, also as NPN version, see type code

K34SR

General data

Connection	Terminal chamber	**Switching distance**	22.5 mm,
Housing material	PBT	**Ambient temperature**	-25…+70 °C
Dimensions	Ø 34 x 106 mm	**Adjustment**	Potentiometer

Types and data – selection table

Type	Operating voltage	Output	Operating current [mA]	w	d
BC15-K34SR-VP4X2	10…65 VDC	, PNP	200, Ⓚ	w073	d424
BC15-K34SR-FZ3X2	20…250 VAC	connection programmable, 2-wire	–	w074	d424

Many different types available, also as NPN version, see type code

KT34

General data

Connection	2 m cable	**Operating voltage**	10…65 VDC
Output	, PNP	**Switching distance**	20 mm,
Housing material	PVDF	**Operating current [mA]**	200, Ⓚ
Ambient temperature	-25…+70 °C	**Dimensions**	Ø 34 x 80 mm
Adjustment	Potentiometer		

Types and data – selection table

Type	w	d
NC20-KT34-VP4X2	w067	d425

Many different types available, also as NPN version, see type code

K40SR

General data

Operating voltage	10…65 VDC	**Switching distance**	30 mm,
Housing material	ABS	**Operating current [mA]**	200, Ⓚ
Ambient temperature	-25…+70 °C	**Dimensions**	Ø 40 x 90 mm
Adjustment	Potentiometer		

Types and data – selection table

Type	Connection	Output	w	d
BC20-K40SR-VP4X2	Terminal chamber	, PNP	w073	d426
BC20-K40SR-VP4X2-H1141	male, M12 x 1	, NPN	w078	d427

Many different types available, also as NPN version, see type code

K40WDTC

General data

Connection	Terminal chamber, Removable cage clamp terminals	**Operating voltage**	10…65 VDC
Output	, PNP	**Switching distance**	30 mm,
Housing material	Grilamid LV-30H FWA	**Operating current [mA]**	200, Ⓚ
Ambient temperature	-25…+70 °C	**Dimensions**	Ø 40 x 91 mm
Adjustment	Potentiometer		

Types and data – selection table

Type	w	d
BC20-K40WDTC-VP4X2/S930	w073	d428

BCF sensors with close-up range suppression

Thanks to the new switching technology in combination with optimized electrode and compensation features, the BCFs work reliably under difficult application conditions. Even conductive coatings are not a problem at all. To avoid HF crosstalk and other interferences, the potentiometer is located in a less sensitive area of the circuit, this applies to all capacitive TURCK sensors. Even applications that are subject to strong interferences do not require additional protective measures. All sensors of the BCF series are immune to radiated and conducted HF interference, burst as well as electrostatic discharge (ESD).

Features

- Automatic wetting compensation
- Increased EMI shielding (even with high frequency equipment)
- High protection class
- New close-up range suppression

Properties

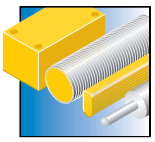

Designs
Cylindrical designs M18 x 1, M30 x 1.5 and Ø 34 mm and Ø 40 and rectangular

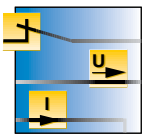

Electrical versions
2-wire AC and 3/4-wire DC, NPN or PNP switching, NC, NO or with antivalent switching output

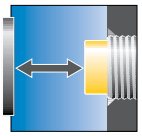

Switching distances
5 … 15 mm, flush mounting

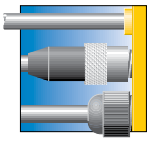

Electrical connections
2 m cable PVC or PUR, male M12 x 1

Materials
PA or PBT housings

Special features
Close-up range suppression, EMC stability

Internet link
Scan the QR code to access our products on the internet

Hans Turck GmbH & Co. KG ▪ Tel. +49 208 49 52-0 ▪ Fax +49 208 49 52-264

BCF – S18

General data

Operating voltage	10…65 VDC	**Output**	, PNP
Switching distance	5 mm,	**Housing material**	PA12-GF30
Operating current [mA]	200, Ⓚ	**Ambient temperature**	-25…+70 °C

Types and data – selection table

Type	Connection	Dimensions	Adjustment	w	d
BCF5-S18-AP4X	2 m cable	Ø 18 x 74 mm	Potentiometer	w061	d416
BCF5-S18-AP4X-H1141/S250	male, M12 x 1	Ø 18 x 83 mm	fixed	w064	d415

Many different types available, also as NPN version, see type code

BCF – S30

General data

Switching distance	10 mm,	**Housing material**	PA12-GF30
Ambient temperature	-25…+70 °C	**Adjustment**	Potentiometer

Types and data – selection table

Type	Connection	Operating voltage	Output	Operating current [mA]	Dimensions	w	d
BCF10-S30-VP4X	2 m cable	10…65 VDC	, PNP	200, Ⓚ	Ø 30 x 62.5 mm	w067	d419
BCF10-S30-VP4X-H1141	male, M12 x 1	10…65 VDC	, PNP	200, Ⓚ	Ø 30 x 60 mm	w069	d418
BCF10-S30-AZ3X	2 m cable	20…250 VAC	, 2-wire	–	Ø 30 x 62.5 mm	w071	d419
BCF10-S30-RZ3X	2 m cable	20…250 VAC	, 2-wire	–	Ø 30 x 62.5 mm	w072	d419

Many different types available, also as NPN version, see type code

w Wiring diagrams on page 658 d Dimension drawing on page 670 Accessories on page 560

BCF – K34

General data

Connection	2 m cable	**Operating voltage**	20…250 VAC
Switching distance	15 mm,	**Housing material**	PBT
Ambient temperature	-25…+70 °C	**Dimensions**	Ø 34 x 80 mm
Adjustment	Potentiometer		

Types and data – selection table

Type	Output	w	d
BCF15-K34-RZ3X	, 2-wire	w072	d423
BCF15-K34-AZ3X	, 2-wire	w071	d423

BCF – Q20L60

General data

Operating voltage	10…65 VDC	**Output**	, PNP
Switching distance	10 mm,	**Housing material**	PC
Operating current [mA]	200, Ⓚ	**Ambient temperature**	-25…+70 °C
Dimensions	30 x 20 x 60 mm	**Adjustment**	Potentiometer

Types and data – selection table

Type	Connection	w	d
BCF10-Q20L60-AP4X	2 m cable	w061	d429
BCF10-Q20L60-AP4X-H1141	male, M12 x 1	w064	d430

Wiring diagrams on page 658 Dimension drawing on page 670 Accessories on page 560

BCC sensors with pre-attenuation protection

The BCC sensors blank out all interferences during the monitoring process: They are EMC and ESD immune. A laterally mounted shield and an integrated processing unit inhibit pre-attenuation when mounted in metal flanges. The full switching distance is thus available

Features

- Automatic wetting compensation
- Excellent EMC properties
- High ESD immunity
- Detection of smallest pellets

Properties

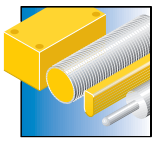

Designs
Threaded barrel, M30 x 1.5

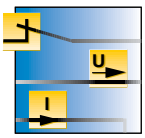

Electrical versions
3/4-wire, PNP switching, NO, NC or with antivalent switching output

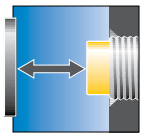

Switching distances
10 mm, flush mounting

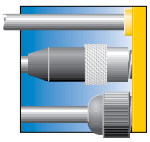

Electrical connections
2 m connection cable or male M12 x 1

Materials
Housing quality plastic, PA or LCP

Special features
ESD immune; lateral pre-attenuation protection

Internet link
Scan the QR code to access our products on the internet

Hans Turck GmbH & Co. KG ▪ Tel. +49 208 49 52-0 ▪ Fax +49 208 49 52-264

BCC – S30

General data

Operating voltage	10…65 VDC	**Switching distance**	10 mm,
Housing material	PA12-GF30	**Operating current [mA]**	200, Ⓚ
Ambient temperature	-25…+70 °C	**Adjustment**	Potentiometer

Types and data – selection table

Type	Connection	Output	Dimensions	w	d
BCC10-S30-RP4X	2 m cable	, PNP	Ø 30 x 62.5 mm	w062	d419
BCC10-S30-AP4X	2 m cable	, PNP	Ø 30 x 62.5 mm	w061	d419
BCC10-S30-AP4X-H1141	male, M12 x 1	, PNP	Ø 30 x 60 mm	w064	d418
BCC10-S30-VP4X-H1141	male, M12 x 1	, PNP	Ø 30 x 60 mm	w069	d418

BCC – S30WD

General data

Connection	male, M12 x 1	**Operating voltage**	10…65 VDC
Output	, PNP	**Switching distance**	10 mm,
Housing material	LCP	**Operating current [mA]**	200, Ⓚ
Ambient temperature	-25…+100 °C	**Dimensions**	Ø 30 mm
Adjustment	Potentiometer		

Types and data – selection table

Type	w	d
BCC10-S30WD-AP4X-H1141	w064	d431

w Wiring diagrams on page 658 d Dimension drawing on page 670 Accessories on page 560

Magnetic field sensors

Magnetic field sensors for pneumatic cylinders

Magnetic field sensors are activated by magnetic fields and are especially suited for the detection of pistons in pneumatic cylinders. Based on the fact that magnetic fields can permeate non-magnetizable metals, sensors of this type detect a permanent magnet mounted on a piston through the aluminium wall of a cylinder.

Magnetic-inductive sensors from TURCK operate on a patented functional principle. The sensing range is adjusted to a core width to rule out multiple switchpoints. Permanent magnets of different field strengths are thus reliably detected in all common cylinder types. The sensors operate wear-free, are rugged and short-circuit protected and feature protection class IP67.

The product range offers many solutions for standard applications, welding facilities as well as Ex-areas. TURCK also offers magnetic field sensors for analog detection tasks. They are easy to operate and even fulfill higher demands equally reliable.

To monitor the piston position on all standard pneumatic cylinders, you only need one sensors series, BIM-UNT, BIM-UNTK and BIM-UNR. NAMUR sensors for explosion hazardous areas are also available. Measuring only 18 mm (UNR), 19.7 mm (UNTK) and 28 mm (UNT), the sensors are very small and can be mounted on C-groove and T-groove cylinders. Matching accessories are also available for mounting on tie-rod and dovetail cylinders. Special versions with fine adjustment or external adjustment of switchpoint are no longer needed.

The series of universal magnetic field sensors for pneumatic cylinders is completed by the WIM45-UNTL with analog current and voltage output. Solutions using indirect analog detection can be easily retrofitted with this new type.

Magnetic-inductive sensors are typically applied in pig trap systems or used for gate monitoring. Even the very small versions achieve large switching distances. In combination with the actuation magnet DMR31-15-5, the M12 sensors attain a nominal switching distance of 90 mm.

Our strengths – Your advantages

Universal magnetic field sensors

Monitoring the piston position on standard pneumatic cylinders is easy with the universal magnetic field sensors. But what's more, with the new magnetic field sensors from TURCK automation processes can be optimized and standardized, from construction over purchase and production, up to system support for operators and service personnel. Use the unique performance spectrum of these sensors to reduce your cost effectively!

High system availability

The universally applicable magnetic field sensors operate extremely reliable, even in rough production environments. This is guaranteed through excellent EMC properties, protection class IP67 as well as the safe method of installation of the devices. We placed great emphasis on practical functionality of the housings and solid mounting accessories. Magnetic field sensors thus withstand the rough ambient conditions of machine building without any problems. Use these benefits to optimize your production processes.

Maximum planning freedom

Numerous connection possibilities, simple mounting and flexible accessories guarantee maximum freedom in planning with minimal mounting effort. From single switchpoint monitoring, over twin-sets, analog position detection up to combined binary/analog monitoring: Profit from the extensive standard product range of TURCK magnetic field sensors bringing more flexibility to your application.

Hans Turck GmbH & Co. KG ▪ Tel. +49 208 49 52-0 ▪ Fax +49 208 49 52-264

Your advantages

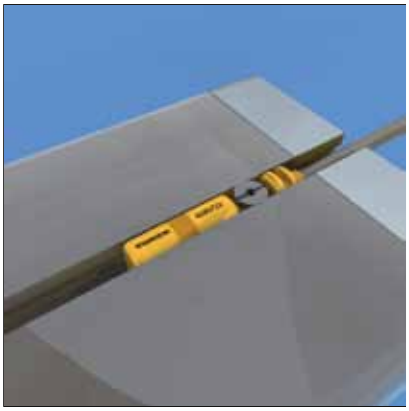

Safe installation

A pre-fixation lip enables one-handed mounting in the groove. Once inserted in the groove, the sensor is moved in its final position and then screwed tight near the cable exit. This prevents an uplift of the sensor when pulling the cable. The screw is a new type of wing screw designed for T-grooves mounting. The wing screw is made of tool steel alloy and is extremely stable. For vibration-resistant mounting it is simply enough to tighten the screw with a quarter revolution, using a standard screw driver or a 1.5 mm Allen key.

Compact design

Measuring only 28 mm (UNT), 19.7 mm (UNTK) and 18 mm (UNR), the standard sensors are the most compact devices on the market. The active face is located directly at the sensor end. This enables the piston position to be detected up to the end of compact short-stroke cylinders. Thanks to the bright and all-round visible LED, the current switching state is perfectly visible from any perspective and proves helpful when sensors are mounted and adjusted. The best mounting position is thus obtained.

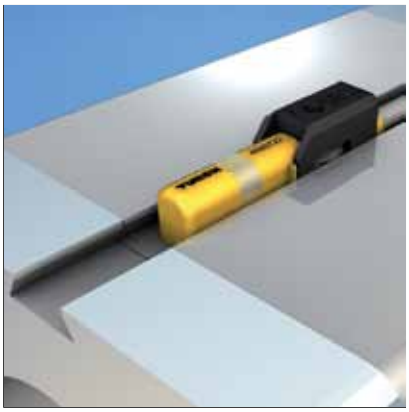

Optional accessories

An extensive range of accessories round off the performance spectrum of the new, universally applicable magnetic field sensors. We offer mounting aids for all standard cylinders, adjustment and fixation tools, as well as the fixation clips for save cable routing. With the new MR sensor element, all magnets in standard pneumatic cylinders can be detected safely and without multiple switching points. Thus piston positions are precisely detected, allowing you to benefit from the high level of flexibility.

Type code

BIM	–	UNT	.	–	A	P	6	X	–	H1	1	4	1	/	S1160

BIM	Functional principle	–	UNT	.	Housing	–	A	P	6	X	Electrical version	–

Functional principle

BIM	magnetic-inductive/ magnetostrictive
WIM45	analog, position detection, magnetically actuated, 45 mm measuring range

Additional information to housing

E	long

Housing

IKT	for tie-rod and profile cylinders mounted with fixing clamp, active face centered
NST	for groove cylinders, mounted with fixing clamp, incl. accessories adaptable to dovetail and tie-rod cylinders active face centered
UNR	for C-groove cylinders without accessories, adaptable to other cylinder types with accessories
UNT	for T-groove cylinders without accessories, adaptable to other cylinder types with accessories
UNTK	short type, for T-groove cylinders, mounted without accessories, accessories for mountingon other cylinder types
UNTL	long size, with analog output, for T-groove cylinders without accessories, adaptable to other cylinder types with accessories
EG, EM	threaded barrel, stainless steel, Ø in [mm]
M	threaded barrel, metal, Ø in [mm]

Indication

X	1 x LED
X...	number of LEDs or multicolor LED

Voltage range

6	10…30 VDC, Ⓚ
4	10…65 VDC, Ⓚ

Output mode

N	NPN
P	PNP

Output function

A	working current NO
LIU	analog output (voltage and current), U_B = 15…30 VDC
AY1	digital (NAMUR acc. to EN 60947-5-6)
Y1	analog (NAMUR acc. to EN 60947-5-6)

H1	1	4	1	Electrical connection: connector	/	S1160	Special version

Assignment

1 standard assigment or customized

Number of contacts

… … contacts

Connector type

1 straight

3 straight with adapter

Connector type

H1 connector M12 x 1

V1 connector M8 x 1 / Ø 8 mm

Features

3GD approval ATEX II 3 G and II 3 D

S34 magnetic-field resistant

S97 extended temperature range: -40 °C

S100 extended temperature range: +100 °C

S1139 extended travel path

S1160 irradiated cable, for welding facilities

S1165 PP cabel, chemical and temperature resistant

x.x	PSG	3	M	Electrical connection: Cable connection	/

Assignment

M rotatable nut

S fixed thread

Number of contacts

… … contacts

Connector type

PSG connector M8 x 1, straight

RS4 connector M12 x 1, straight

Cable length

... [m]

…M	Cable Connection	/

Cable Connection

…M cable length [m]

Designs and variants

	Design	Measuring range	Electrical connection	Output	Accessories for cylindrical design	Page
UNTK – 3-wire DC	rectangular 5 x 6 x 19.7 mm	–	2 m cable 0.3 m cable with connector, M8 x 1 0.3 m cable with connector, M12 x 1	, PNP	KLR1... - KLDT... KLZ...INT	199
UNT – cable connection and cable with male end	rectangular UNT 5 x 6 x 28 mm	–	2 m cable 0.3 m cable with connector, M12 x 1 7 m cable 0.3 m cable with connector, M8 x 1 0.3 m cable with connector, Ø8 mm 0.3 m cable with connector	NAMUR , PNP , NPN , 2-wire	KLR1... - KLDT... KLZ...INT	199
UNT – M12 x 1 or male M8 x 1	rectangular UNT 5 x 22 x 30 mm	–	connector, M8 x 1 connector, M12 x 1	, PNP , NPN	KLR1... - KLDT... KLZ...INT	200
UNT – Twin Set	rectangular UNT 5 x 22 x 30 mm	–	connector, M8 x 1 connector, M12 x 1	, PNP	KLR1... - KLDT... KLZ...INT	200
UNR – 3-wire DC	rectangular UNR 2.9 x 4.6 x 18 mm	–	2 m cable 7 m cable 0.3 m cable with connector, M8 x 1 0.3 m cable with connector, Ø8 mm 0.3 m cable with connector, M12 x 1	, PNP , NPN	-	203
UNTL – Current and voltage output	rectangular UNTL 5 x 14.5 x 73 mm	45 mm	0.3 m cable with connector, M8 x 1 0.3 m cable with connector, M12 x 1	Analog output, 4...20 mA, 0...10 V	- KLDT...	205
UNTL – Twin Set	rectangular UNTL	45 mm	cable with connector, M12 x 1	, PNP/ Analog output, 0...10 V	–	205

Hans Turck GmbH & Co. KG ▪ Tel. +49 208 49 52-0 ▪ Fax +49 208 49 52-264

	Design	Measuring range	Electrical connection	Output	Accessories for cylindrical design	Page
Design NST	rectangular NST 17 x 14 x 28 mm	–	2 m cable connector, M12 x 1 connector, M8 x 1	NAMUR , PNP , NPN	KLN3 KLN3 KLZ...INT and KLN3 KLN-SMC KLF1 8 KLF2	207
Design IKT	rectangular IKT 14.6 x 17 x 30 mm 14.6 x 28 x 30 mm	–	2 m cable connector, M12 x 1 connector, M8 x 1	NAMUR , PNP , NPN	KLI... KLI... KLI...	207
M8	threaded barrel M8 x 1 Ø 8 x 41.6 mm Ø 8 x 57 mm Ø 8 x 49 mm	–	2 m cable connector, M12 x 1 connector, M8 x 1	NAMUR , NPN , PNP	–	209
M12	threaded barrel M12 x 1 Ø 12 x 62 mm Ø 12 x 64 mm	–	connector, M12 x 1 2 m cable	NAMUR , PNP , NPN	–	209

UNT and UNTK design

UNTs and UNTKs are mounted quickly and firmly. The devices of the UNTK series are extremely compact and feature a very small switching distance. A pre-fixation lip enables one-handed mounting, even overhead. With the extended range of accessories, the sensors can be mounted on nearly all standard pneumatic cylinders. All standard connection types are available.

Features

- Compact design
- Quickly and firmly mounted
- Excellent EMC properties
- For T-groove cylinders without accessories
- Mounting accessories for all standard cylinders.
- Clearly visible LED
- Twin set for monitoring of two switchpoints

Properties

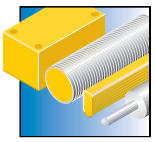

Designs
Universal design (28 mm) and very compact design (19.7 mm)

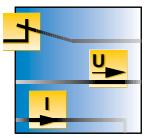

Electrical version
NAMUR, 2, 3 and 4-wire DC

Measuring ranges
Reliable position detection on all standard pneumatic cylinders

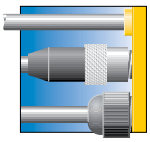

Electrical connections
Cable, male M8 and M12, pigtail

Materials
Rugged PP housing for a wide range of applications

Internet link
Scan the QR code to access our products on the internet

UNTK

General data

Protection class	IP67	**Operating voltage**	10…30 VDC
Output	_⟋‾, PNP	**Housing material**	PP
Ambient temperature	-25…+70 °C	**Dimensions**	5 x 6 x 19.7 mm

Types and data – selection table

Type	Connection	w	d
BIM-UNTK-AP7X	2 m cable	w079	d432
BIM-UNTK-AP7X-0,3-PSG3M	0.3 m Cable with connector, M8 x 1	w064	d433
BIM-UNTK-AP7X-0,3-RS4	0.3 m Cable with connector, M12 x 1	w064	d434

UNT – cable connection and cable with male end

General data

Protection class	IP67	**Housing material**	PP
Ambient temperature	-25…+70 °C	**Dimensions**	5 x 6 x 28 mm

S1139: long overtravel range; S1160: irradiated, weld-resistant cable; S1165: highly resistant cable for the food industry

Types and data – selection table

Type	Connection	Operating voltage	Output	w	d
BIM-UNT-AY1X/S1139	2 m cable	8.2 VDC	NAMUR	w080	d435
BIM-UNT-AY1X-0,3-RS4.21/S1139	0.3 m Cable with connector, M12 x 1	8.2 VDC	NAMUR	w081	d436
BIM-UNT-AP6X	2 m cable	10…30 VDC	_⟋‾, PNP	w079	d435
BIM-UNT-AP6X 7M	7 m cable	10…30 VDC	_⟋‾, PNP	w079	d435
BIM-UNT-AP6X/S1139	2 m cable	10…30 VDC	_⟋‾, PNP	w079	d435
BIM-UNT-AP6X/S1160	2 m cable	10…30 VDC	_⟋‾, PNP	w079	d435
BIM-UNT-AP6X/3GD	2 m cable	10…30 VDC	_⟋‾, PNP	w079	d435
BIM-UNT-AP6X-0,3-PSG3S	0.3 m Cable with connector, M8 x 1	10…30 VDC	_⟋‾, PNP	w064	d437
BIM-UNT-AP6X-0,3-PSG3S/S1139	0.3 m Cable with connector, M8 x 1	10…30 VDC	_⟋‾, PNP	w064	d437
BIM-UNT-AP6X-0,3-PSG3M	0.3 m Cable with connector, M8 x 1	10…30 VDC	_⟋‾, PNP	w064	d438
BIM-UNT-AP6X-0,3-PSG3M/S1139	0.3 m Cable with connector, M8 x 1	10…30 VDC	_⟋‾, PNP	w064	d438
BIM-UNT-AP6X-0,3-RS4	0.3 m Cable with connector, M12 x 1	10…30 VDC	_⟋‾, PNP	w064	d436
BIM-UNT-AP6X-0,3-RS4/S1139	0.3 m Cable with connector, M12 x 1	10…30 VDC	_⟋‾, PNP	w064	d436
BIM-UNT-AP6X-0,3-RS4/S1160	0.3 m Cable with connector, M12 x 1	10…30 VDC	_⟋‾, PNP	w064	d436
BIM-UNT-AG41X/S1139/S1160	2 m cable	10…55 VDC	_⟋‾, 2-wire	w082	d435

Table continues on the next page…

… Table starts on previous page

Type	Connection	Operating voltage	Output	w	d
BIM-UNT-AG41X-0,3-RS4.23/S1139/S1160	0.3 m Cable with connector	10…55 VDC	_⟋‾, 2-wire	w083	d436

Many different types available, also as NPN version, see type code

UNT – M12 x 1 or male M8 x 1

General data

Protection class	IP67	**Operating voltage**	10…30 VDC
Output	_⟋‾, PNP	**Housing material**	PP
Ambient temperature	-25…+70 °C	**Dimensions**	5 x 22 x 30 mm

Types and data – selection table

Type	Connection	w	d
BIM-UNT-AP6X2-V1131	male, M8 x 1	w064	d439
BIM-UNT-AP6X2-H1141	male, M12 x 1	w064	d440

Many different types available, also as NPN version, see type code

UNT – Twin set

General data

Protection class	IP67	**Operating voltage**	10…30 VDC
Output	_⟋‾, PNP	**Housing material**	PP
Ambient temperature	-25…+70 °C	**Dimensions**	5 x 22 x 30 mm

Types and data – selection table

Type	Connection	w	d
BIM-UNT-0,3-UNT-2AP6X3-V1141	male, M8 x 1	w084	d441
BIM-UNT-0,3-UNT-2AP6X3-H1141	male, M12 x 1	w084	d442

Wiring diagrams on page 658 Dimension drawing on page 670 Accessories on page 560

UNR design

Magnetic field sensors for short-stroke cylinders and parallel grippers are very compactly designed. The all-round visible LED allows the switching state to be observed from any position. All standard connection types are available.

Features

- Compact design
- For C groove cylinders
- Quickly and firmly mounted
- Excellent EMC properties
- Clearly visible LED

Properties

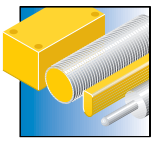

Designs
Small size, length 18 mm

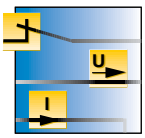

Electrical version
3-wire DC outputs NPN/PNP

Measuring ranges
Reliable position detection on all standard pneumatic cylinders

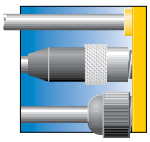

Electrical connections
Cable, cable with male end M8 x 1 and M12 x 1

Materials
Rugged PP housing for a wide range of applications

Internet link
Scan the QR code to access our products on the internet

Hans Turck GmbH & Co. KG ▪ Tel. +49 208 49 52-0 ▪ Fax +49 208 49 52-264

UNR

General data

Protection class	IP67	**Operating voltage**	10…30 VDC
Output	_⟋‾, PNP	**Housing material**	PP
Ambient temperature	-25…+70 °C	**Dimensions**	2.9 x 4.6 x 18 mm

Types and data – selection table

Type	Connection	w	d
BIM-UNR-AP6X	2 m cable	w079	d443
BIM-UNR-AP6X 7M	7 m cable	w079	d443
BIM-UNR-AP6X-0,3-PSG3S	0.3 m Cable with connector, M8 x 1	w064	d444
BIM-UNR-AP6X-0,3-PSG3M	0.3 m Cable with connector, M8 x 1	w064	d445
BIM-UNR-AP6X-0,3-RS4	0.3 m Cable with connector, M12 x 1	w064	d446

Many different types available, also as NPN version, see type code

w Wiring diagrams on page 658 d Dimension drawing on page 670 Accessories on page 560

Analog position gauging systems

The universal magnetic field sensors for pneumatic cylinders are now also available with analog current and voltage output. The new analog sensor WIM45-UNTL by TURCK offers clear advantages, especially in situations where additional flexibility and monitoring properties are required.

Features

- Compact design
- Quickly and firmly mounted
- Inserted in the groove from the top
- Hardly affected by external magnetic fields
- Status of magnetic field displayed via 2 LEDs
- Measured value memory

Properties

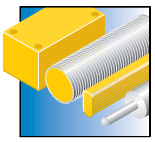

Designs
One type for all standard pneumatic cylinders

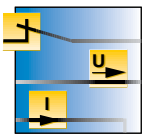

Electrical version
Analog outputs 4… 20 mA and 0…10 VDC as well as 3-wire DC switching output

Measuring ranges
Analog position detection up to 45 mm on all standard pneumatic cylinders

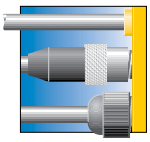

Electrical connections
Standard connection modes: Cable with male end M8 or M12

Materials
Rugged PA housing for a wide range of applications

Special features
Also available with combined analog and switching output in one device

Internet link
Scan the QR code to access our products on the internet

Hans Turck GmbH & Co. KG ▪ Tel. +49 208 49 52-0 ▪ Fax +49 208 49 52-264

UNTL – Current and voltage output

General data

Measuring range	45 mm	**Protection class**	IP67
Operating voltage	15…30 VDC	**Output**	Analog output, 4…20 mA, 0…10 V
Housing material	PA12-GF30	**Ambient temperature**	-25…+70 °C
Dimensions	5 x 14.5 x 73 mm	**Repeatability**	0.1% of measuring range IA - BI

Types and data – selection table

Type	Connection	w	d
WIM45-UNTL-LIU5X2-0,3-PSG4M	0.3 m Cable with connector, M8 x 1	w085	d447
WIM45-UNTL-LIU5X2-0,3-RS4	0.3 m Cable with connector, M12 x 1	w085	d448

UNTL – Twin set

General data

Measuring range	45 mm	**Protection class**	IP67
Connection	Cable with connector, M12 x 1	**Operating voltage**	15…30 VDC
Output	⎓, PNP/analog output, 0…10 V	**Housing material**	PA
Ambient temperature	-25…+70 °C	**Repeatability**	0.1% of measuring range IA - BI

Types and data – selection table

Type	w	d
WIM45-UNTL-0,3-BIM-UNT-LUAP6X 4-H1141	w086	d449

w Wiring diagrams on page 658 d Dimension drawing on page 670 Accessories on page 560

For harsh environments

The rugged magnetic field sensors are particularly suited for harsh environments. With the extended range of accessories the sensors can be mounted on nearly all standard pneumatic cylinders. All standard connection types are available.

Features

- Rugged designs
- Many different mounting options
- Optional weld field immunity
- Excellent EMC properties

Properties

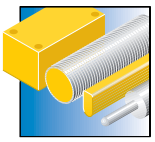

Designs
Standard design, for harsh environments

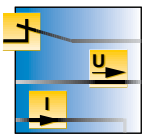

Electrical versions
NAMUR, 2/3-wire DC

Measuring ranges
Reliable position detection on all standard pneumatic cylinders

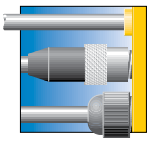

Electrical connections
Cable, male M8 x 1 and M12 x 1

Materials
Rugged PA12-GF30 resp. GD-ZN housing for a wide range of applications

Internet link
Scan the QR code to access our products on the internet

Hans Turck GmbH & Co. KG ▪ Tel. +49 208 49 52-0 ▪ Fax +49 208 49 52-264

NST

General data

Protection class	IP67	**Housing material**	PA12-GF30
Ambient temperature	-25…+70 °C	**Dimensions**	17 x 14 x 28 mm

S34: weld-resistant, for use in 50-Hz welding systems

Types and data – selection table

Type	Connection	Operating voltage	Output	w	d
BIM-NST-Y1X	2 m cable	8.2 VDC	NAMUR	w080	d450
BIM-NST-Y1X-H1141	male, M12 x 1	8.2 VDC	NAMUR	w081	d451
BIM-NST-AP6X	2 m cable	10…30 VDC	_⟋‾, PNP	w079	d450
BIM-NST-AP6X-V1131	male, M8 x 1	10…30 VDC	_⟋‾, PNP	w064	d452
BIM-NST-AP6X-H1141	male, M12 x 1	10…30 VDC	_⟋‾, PNP	w064	d451
BIM-NST-AP6X-H1141/S34	male, M12 x 1	10…30 VDC	_⟋‾, PNP	w064	d453

Many different types available, also as NPN version, see type code

IKT

General data

Protection class	IP67	**Housing material**	GD-Zn
Ambient temperature	-25…+70 °C		

Types and data – selection table

Type	Connection	Operating voltage	Output	Dimensions	w	d
BIM-IKT-Y1X	2 m cable	8.2 VDC	NAMUR	14.6 x 17 x 30 mm	w080	d454
BIM-IKT-Y1X-H1141	male, M12 x 1	8.2 VDC	NAMUR	14.6 x 28 x 30 mm	w081	d455
BIM-IKT-AP6X	2 m cable	10…30 VDC	_⟋‾, PNP	14.6 x 17 x 30 mm	w079	d454
BIM-IKT-AP6X-V1131	male, M8 x 1	10…30 VDC	_⟋‾, PNP	14.6 x 17 x 30 mm	w064	d456
BIM-IKT-AP6X-H1141	male, M12 x 1	10…30 VDC	_⟋‾, PNP	14.6 x 28 x 30 mm	w064	d455

Many different types available, also as NPN version, see type code

w Wiring diagrams on page 658 d Dimension drawing on page 670 Accessories on page 560

Magnetic-inductive sensors

Typical applications for magnetic-inductive sensors include „pig“ detection and gate monitoring. Since magnetic-inductive sensors are actuated by external magnetic fields, they achieve large switching distances despite their small size. In combination with the actuation magnet DMR31-15-5, the M12 sensors attain a rated switching distance of 90 mm.

Features

- Achieves very long ranges
- Permeates non-magnetizable materials
- ATEX and SIL approved versions
- Rugged threaded barrels
- Broad selection of actuators

Properties

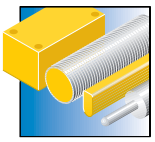

Designs
Threaded barrels M8 x 1 or M12 x 1

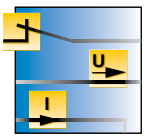

Electrical version
NAMUR, 2 or 3-wire DC

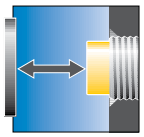

Switching distances
M8 sensors up to 78 mm and M12 sensors up to 90 mm, depending on the actuating magnet

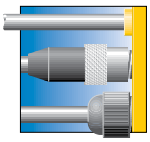

Electrical connections
Connection cable, male M8 x 1 and M12 x 1, 2 m

Materials
Rugged threaded barrels, chrome-plated brass or stainless steel

Internet link
Scan the QR code to access our products on the internet

M8

General data

Protection class	IP67	**Switching distance**	78 mm
Housing material	V2A (1.4301)	**Ambient temperature**	-25…+70 °C

For more details on magnetic actuators see chapter „Accessories“
Operating distance 78 mm, in conjunction with magnet DMR31-15-5

Types and data – selection table

Type	Connection	Operating voltage	Output	Dimensions	w	d
BIM-EG08-Y1X	2 m cable	8.2 VDC	NAMUR	Ø 8 x 41.6 mm	w080	d457
BIM-EG08-Y1X-H1341	male, M12 x 1	8.2 VDC	NAMUR	Ø 8 x 57 mm	w081	d458
BIM-EG08-AP6X	2 m cable	10…30 VDC	_⌐‾, PNP	Ø 8 x 41.6 mm	w079	d457
BIM-EG08-AP6X-V1131	male, M8 x 1	10…30 VDC	_⌐‾, PNP	Ø 8 x 49 mm	w064	d459
BIM-EG08-AP6X-H1341	male, M12 x 1	10…30 VDC	_⌐‾, PNP	Ø 8 x 57 mm	w064	d458

Many different types available, also as NPN version, see type code

M12

General data

Protection class	IP67	**Switching distance**	90 mm
Ambient temperature	-25…+70 °C		

For more details on magnetic actuators see chapter „Accessories“
Operating distance 90 mm, in conjunction with magnet DMR31-15-5

Types and data – selection table

Type	Connection	Operating voltage	Output	Housing material	Dimensions	w	d
BIM-M12E-Y1X-H1141	male, M12 x 1	8.2 VDC	NAMUR	CuZn, chrome-plated	Ø 12 x 62 mm	w081	d173
BIM-EM12E-Y1X	2 m cable	8.2 VDC	NAMUR	V2A (1.4301)	Ø 12 x 64 mm	w080	d460
BIM-EM12E-AP4X-H1141	male, M12 x 1	10…65 VDC	_⌐‾, PNP	V2A (1.4301)	Ø 12 x 62 mm	w064	d173
BIM-EM12E-AP4X	2 m cable	10…65 VDC	_⌐‾, PNP	V2A (1.4301)	Ø 12 x 64 mm	w079	d460

Many different types available, also as NPN version, see type code

w Wiring diagrams on page 658 d Dimension drawing on page 670 Accessories on page 560

Photoelectric sensors

Photoelectric sensors from TURCK - More solutions, more advantages

Photoelectric sensors use visible or infrared light to detect many different types of objects contactless, regardless of their quality and consistency. Unlike inductive or capacitive sensors, they cover larger measuring ranges.
The most common tasks they fulfill are position control, counting, sorting and classifying. They are mostly applied in the automotive industry, machine-building, assembly lines, storage and transport systems.
Photoelectric sensors operate on the principle of emitting and receiving light. A diode emits light which is either cut off or reflected by an object and the event is subsequently processed. Photoelectric sensors are available as opposed mode, retroreflective mode, diffuse mode or fiber-optic systems.
Diffuse mode sensors detect the light reflected by an object. The sensing range of these sensors depends largely on the reflectivity factor of the object.
Retroreflective sensors detect a light beam which is established between emitter, reflector and receiver. If an object cuts off the beam, the sensor reacts.
Opposed mode sensors operate similarly. Unlike retroreflective sensors, emitter and receiver are separate units. Opposed mode sensors thus achieve greater sensing ranges than retroreflective devices.
Glass or plastic fibers pipe the light beam from the sensor to the object and back. They are especially suited for confined spaces or demanding environmental conditions.
Switching and measuring light screens, the so called area sensors, are applied where scanning with a single beam would be unapt. Light screens consist of many single beams, detecting the quality of objects through the different switching states of each single beam.
Whether standard or programmable multifunctional versions, compact devices or devices with external amplifier etc., each sensor has special features suited for different applications. TURCK not only offers the most comprehensive product range of photoelectric sensors, optical fibers and systems, you also get individual service and support to find the optimal solution for your application.

Our strengths – Your advantages

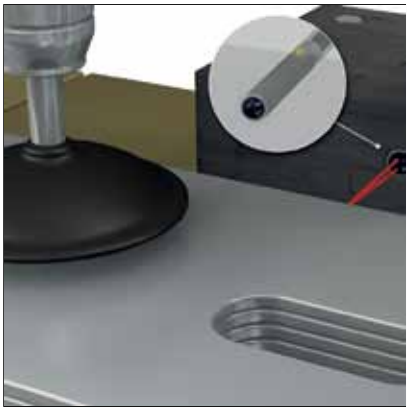

VSM – High-power miniature sensor

The VSM series comprises miniature sensors incorporated in a rugged stainless steel housing with a sapphire crystal glass window which makes them resistant to many chemicals and cooling lubricants. Achieving long ranges and measuring only 4 mm, the VSMs can be installed in applications normally reserved to optical fibers. The sensors incorporate the entire evaluation electronics needing no additional amplifier. Optical power and efficiency are thus enhanced. Thanks to the excellently focused lens, the sensor produces a narrow and extremely bright light beam. Even frequent cleaning cycles in hygienic environments are not a problem at all for the VSM: The stainless steel versions, available as smooth barrels or flat rectangular types with recessed optics, are the perfect choice for such tasks.

Q20 series - Compact, powerful and versatile

The Q20 are not only versatile in terms of operating modes, they as powerful as bigger sensors. The plastic housings are fully encapsulated and excellently durable and tight. Their compact design enables easy mounting even in confined spaces. Bores with integrated thread make the use of additional mounting nuts redundant.

Q26 - Compact sensor for detection of transparent objects

The Q26 works on the retroreflective principle, using a polarizing filter which is especially designed for the detection of clear-glass objects. By means of the coaxially arranged optics, the light beam hits the reflector vertically. Transparent, opaque and reflecting objects are thus reliably detected. Objects located anywhere between sensor and reflector are detected with this single-lens system. Light or dark operation are set with a rotary switch. A very short response time of only 250 µs is a further plus of the Q26.

Hans Turck GmbH & Co. KG ▪ Tel. +49 208 49 52-0 ▪ Fax +49 208 49 52-264

Your advantages

QS30ELVC – High-End opposed mode sensor for clear-glass detection

The QS30ELVC is a user-friendly powerful opposed mode sensor for detecting bright, transparent or opaque objects. PET bottles, glass jars and reflecting surfaces such as mirrors, LCDs with polarization coating are reliably detected.
The sensor is insensitive to the reflections of the objects.

QS30 H2O – High-power sensor for the detection of water

The QS30H2O detects water reliably. The photoelectric components are adjusted to the absorption band of water in the long-wave infrared spectrum. The emitted infrared beam permeates most plastic and glass containers but not water-based liquids, wood, metal or cardboard. Blinds to attenuate or shape light beams are additionally available for applications in which clear water has to be detected in transparent bottles for example.

R58E Expert – Registration mark sensor with automatic teach routines

The R58E with excellent color sensitivity is typically used for the registration of products and materials. With a response time of only 50 µs, the R58E achieves excellent repeatability, also in high-speed applications. Output ON and output OFF are individually programmable. In dynamic teach mode the R58E adjusts the switchpoint automatically during operation through continuous scanning of the brightest and darkest events.

Our strengths – Your advantages

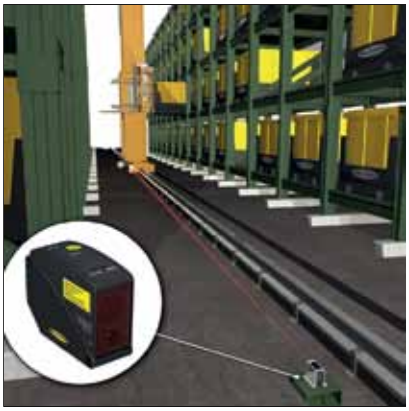

L-GAGE® LT3 – Laser sensor for distance measurement

LT3 laser sensors for distance measurement provide exceptional sensing ranges and accuracy. The diffuse mode versions achieve ranges of 0.3 to 3 m for grey objects and 0.3 m to 5 m for white objects. Retroreflective sensors achieve ranges of up to 50 m. The LT3 is easily programmed via an integrated pushbutton. A resolution of up to 1 mm can be achieved, depending on the adjusted response time and object color. The sensor features a switching and an analog output, each with its individual measuring range. The scalable analog output automatically spreads the output signal over the entire programmed sensing range.

Ex area – Solutions available in many different operating modes

TURCK provides the full range of performance even for explosion hazardous areas. The NAMUR sensors of the series MINI-BEAM® and Q45 are approved according to KEMA certificate 03 ATEX 1441 X ignition protection type Ex ia IIC T6 and fulfill all relevant norms such as EN 60947-5-6, EN 60079-0, part 1 and EN 60079-11. Available are opposed and retroreflective mode, convergent and diffuse mode sensors as well as basic devices for optical fibers.

DF-G1 Expert – With intuitive user interface

The DF-G1 basic device can be used in many applications, operates reliable and is easy to handle. All this is available at a very good price/performance ratio. New design with improved connectivity for plastic fibers and also special high-temperature resistant glass fibers. The well readable dual display indicates the threshold and signal strength simultaneously and combines easy operability with pinpoint accuracy. The user can comfortably adjust the response time, signal strength and sensitivity. The basic device works reliably in low contrast applications, identifies small parts and controls the position of electronic components.

Hans Turck GmbH & Co. KG ▪ Tel. +49 208 49 52-0 ▪ Fax +49 208 49 52-264

ur advantages

EZ-ARRAY™ – Measuring light screen

The measuring light screen A-GAGE® EZ-ARRAY™ is ideal for product sizing and profiling, edge and center guiding, loop tension control and parts counting. The narrowly arranged infrared beams detect 5 mm objects at a range of 4 m and achieve heights of either 150 mm or 1800 mm with an edge resolution of 2.5 mm. 14 measuring modes can be set such as, 3 scanning methods, 2 analog and 2 digital switching outputs as well as a serial output.

Vision sensors iVu and iVu Plus with C-mount lens

The vision sensors of the iVu and iVu Plus series achieve a longer focal distance when used in combination with a C-mount lens. The flexible and easy to handle vision sensors can thus be mounted further away from the inspection area. The C-mount lens also provides a higher luminous sensitivity and thus a better pixel resolution and sharpness which is ideal for high-speed applications. Protection rating IP67 is fulfilled with the optionally available lens cover. All other features of the iVu and iVu Plus series, such as the integrated touch screen, remote display and the many connection possibilities are of course also provided by the vision sensors with C-mount lens.

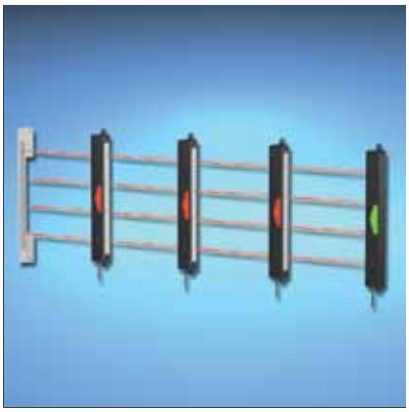

Pick-to-light solutions – Control and monitoring of job sequences

Pick-to-light solutions control and monitor commissioning processes. The light screen located in front of picking bins detects the hand of the operator. Job lights additionally indicate into which bin the operator has to reach next. TURCK offers different pick-to-light solutions, also for direct mounting on picking bins. If output signals from sensors have to be visually monitored for example, multicolor job lights are the right choice. The bright LEDs can also be used as indicators for machine states.

Designs and variants

	Design	Output function	Protection class	Ambient temperature	Function	Max. range [mm]	Light type	Page
VS1 – Convergent mode sensor	rectangular 8.3 x 25.7 x 11.6 mm	PNP	IP67	-20…+55 °C		10 20	red, 630 nm	227
VS2 – Flat design	rectangular 12 x 25.1 x 4.7 mm	PNP	IP67	-20…+55 °C		1200 15 30	red, 660 nm	227
VS3 – Retroreflective sensor	rectangular 9 x 25.4 x 16.6 mm	PNP	IP67	-20…+55 °C		250	red, 680 nm	228
VSM – Stainless steel sensors	smooth barrel threaded barrel rectangular Ø 4 x 35 mm Ø 4 x 36.8 mm Ø 6.5 x 35 mm Ø 6.5 x 36.8 mm 5 x 40 x 7 mm	PNP	IP67	0…+55 °C		250	IR, 880 nm	228
VS4 – Rectangular design	rectangular 4.75 x 25.4 x 12.5 mm	PNP	IP67	-20…+55 °C		1000	red, 660 nm	229
T8 – Round design	threaded barrel Ø 16.3 x 15.8 mm	PNP	IP67	-20…+55 °C		2000 50 100	red, 660 nm red, 680 nm	229

ts and variants

	Design	Output function	Protection class	Ambient temperature	Function	Max. range [mm]	Light type	Page
Q12 – Rectangular design	rectangular 8 x 26.6 x 12.4 mm	PNP/NPN	IP67	-20…+55 °C		2000 1500 1000 15 30 50	red, 640 nm	230
M12 – Cylindrical design	threaded barrel Ø 12 x 67.5 mm Ø 12 x 74 mm	PNP NPN	IP67	-20…+60 °C		5000 400 2500 1500 25 50 75	red, 660 nm red, 680 nm	233
QS18 – With thread	rectangular 15 x 35 x 31 mm 15 x 35 x 33.2 mm	PNP NPN	IP67	-20…+70 °C -10…+50 °C		50 100 300 450 3500 6500 10000 20000 30000	IR, 940 nm red, 650 nm, 1 red, 650 nm, 2 red, 660 nm	235
QS18 – Without thread	rectangular 15 x 35 x 27.7 mm 15 x 35 x 21.1 mm 15 x 34.5 x 21.1 mm	NPN PNP	IP67	-20…+70 °C 0…+55 °C -10…+50 °C		3000 20000 450 100 200 40 300 150 250	IR, 940 nm red, 660 nm red, 650 nm, 1 red, 658 nm, 2	235
QS18 Expert – With thread	rectangular 15 x 35 x 31 mm	NPN PNP	IP67	-20…+70 °C		3500 800 600	red, 660 nm IR, 940 nm red, 940 nm	236
QS18 Expert – Without thread	rectangular 15 x 35 x 21.1 mm	NPN PNP	IP67	-20…+70 °C		500 300	IR, 940 nm	237

Designs and variants

	Design	Output function	Protection class	Ambient temperature	Function	Max. range [mm]	Light type	Page
TM18 – Round design with metal housing	cylindrical/threaded 30 x 41 x 30 mm 30 x 49 x 30 mm	PNP	IP67 / IP69K	-40…+70 °C		20000 5500 25 50 100	red, 625 nm red, 680 nm red, 880 nm	239
S18 – Cylindrical design	cylindrical/threaded Ø 18 x 78.7 mm Ø 18 x 59.2 mm Ø 18 x 65 mm Ø 18 x 84.1 mm	NPN PNP	IP67 / IP69K	-40…+70 °C		20000 2000 25 50 100 300	IR, 950 nm red, 680 nm IR, 880 nm	241
M18 – Cylindrical design with metal housing	cylindrical/threaded Ø 18 x 59.2 mm Ø 18 x 78 mm Ø 18 x 65 mm Ø 18 x 83.8 mm	NPN PNP	IP67	-40…+70 °C		20000 2000 25 50 100 300	IR, 950 nm red, 680 nm IR, 880 nm	241
T18 – Round design	cylindrical/threaded 30 x 41.5 x 30 mm 30 x 54 x 30 mm	NPN PNP	IP67 / IP69K	-40…+70 °C		20000 2000 500 25 50 100	IR, 950 nm red, 680 nm IR, 880 nm	242
Q25 – Rectangular design	rectangular 25 x 50.2 x 30 mm 25 x 62.7 x 30 mm	NPN PNP	IP67 / IP69K	-40…+70 °C		20000 2000 25 50 100	IR, 950 nm red, 680 nm IR, 880 nm	243
Q20 – Rectangular design	rectangular 12 x 32 x 20 mm	NPN PNP	IP67	-20…+60 °C		12000 20000 6000 4000 250 800 1500 50 100 150	red, 630 nm IR, 850 nm red, 660 nm	245

ts and variants

	Design	Output function	Protection class	Ambient temperature	Function	Max. range [mm]	Light type	Page
Q26 – Rectangular design	rectangular 14 x 42 x 25 mm	NPN PNP	IP67	-10…+55 °C		800	red, 660 nm	247
QS30 - Rectangular design	rectangular 22 x 57 x 35 mm 22 x 49 x 35 mm 22 x 53 x 35 mm	PNP/NPN	IP67	-20…+70 °C -10…+55 °C		60000 12000 8000 1000 600 400 200	IR, 875 nm red, 630 nm IR, 940 nm red, 660 nm red, 680 nm	249
QS30 - Expert	rectangular 22 x 49 x 35 mm 22 x 57 x 35 mm	PNP/NPN	IP67	-10…+50 °C -10…+55 °C		18000 2000 1400 400 800	red, 650 nm, ⚠ 1 red, 660 nm red, 650 nm, ⚠ 2	249
QS30 - Water-detection sensor	rectangular 22 x 53 x 54.3 mm 22 x 57 x 51.5 mm	PNP/NPN	IP67	-20…+60 °C		4000 2000 8000	IR, 1450 nm	250
S30 - Cylindrical design	cylindrical/threaded Ø 30 x 77.5 mm Ø 30 x 68.7 mm	PNP	IP67 / IP69K	-40…+70 °C		60000 6000 200 400 600	IR, 950 nm red, 680 nm IR, 880 nm	253
T30 – Round design	cylindrical/threaded 40 x 64 x 45 mm 40 x 51.5 x 45 mm	PNP	IP67 / IP69K	-40…+70 °C		60000 6000 200 400 600	IR, 950 nm red, 680 nm IR, 880 nm	253

Designs and variants

	Design	Output function	Protection class	Ambient temperature	Function	Max. range [mm]	Light type	Page
Q40 – Rectangular design	rectangular 40.1 x 82.5 x 46 mm 40.1 x 69.8 x 46 mm 40.1 x 40 x 46 mm	PNP	IP67 / IP69K	-40…+70 °C		60000 6000 200 400 600	IR, 950 nm red, 680 nm IR, 880 nm	254
QM42 – Rectangular design	rectangular 12.7 x 60.2 x 42 mm 12.7 x 42 x 42 mm	PNP	IP67	-20…+70 °C -20…+55 °C		10000 3000 400 150	IR, 880 nm red, 660 nm	257
QMT42 – Rectangular design	rectangular 18 x 76.2 x 42 mm 18 x 58 x 42 mm	PNP	IP67	-20…+55 °C		6000 750 1000 1500 400 500 2000	IR, 880 nm red, 680 nm	257
Q45 - Rectangular design	rectangular 44.5 x 87.6 x 56.4 mm 44.5 x 102.6 x 56.4 mm 12.3 x 30.7 x 53.3 mm 54.6 x 44.5 x 87.6 mm 54.6 x 44.5 x 103 mm 56.4 x 44.5 x 87.6 mm 56.4 x 44.5 x 103 mm	PNP/NPN	IP67	-40…+70 °C -10…+40 °C		60000 6000 9000 40000 70000 450 1800 3000	IR, 880 nm red, 680 nm red, 650 nm red, 655 nm, ⚠ 2	259
Q60 – Rectangular design	rectangular 25 x 75 x 60 mm	PNP/NPN	IP67	-20…+55 °C -10…+50 °C		1000 2000 1400	red, 665 nm IR, 880 nm red, 650 nm, ⚠ 1 red, 650 nm, ⚠ 2	262
QC50 – Color sensor	rectangular 25 x 50 x 50 mm	PNP	IP67	-10…+55 °C		20	white	263

Hans Turck GmbH & Co. KG ▪ Tel. +49 208 49 52-0 ▪ Fax +49 208 49 52-264

ts and variants

	Design	Output function	Protection class	Ambient temperature	Function	Max. range [mm]	Light type	Page
R58 – Registration mark sensor	rectangular 30 x 58.9 x 80.1 mm	PNP/NPN	IP67	-10…+55 °C		–	red green red / green / blau	265
LT3 – Laser running time meter 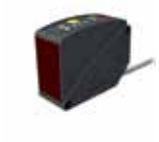	rectangular 35.3 x 68.5 x 87 mm	PNP/NPN PNP/analog output	IP67	0…+50 °C		5000 50000	red, 658 nm, 2 red, 658 nm, 1	267
LT7 – Laser running time meter 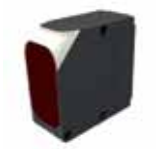	rectangular 42 x 93 x 95 mm	PNP/analog output PNP	IP67	-10…+50 °C		10000 250000	IR, 900 nm, 1	267
LH – Laser triangulation	rectangular 32 x 80 x 65 mm	analog output	IP67	-10…+45 °C		35 100 200	red, 670 nm, 2	269
MINI-BEAM – Compact design	rectangular 12.3 x 30.7 x 66 mm 12.3 x 30.7 x 84 mm 12.3 x 30.7 x 51.8 mm 12.3 x 30.7 x 69.8 mm	NAMUR	IP67	-40…+70 °C		6000 5000 2000 380 75	IR, 880 nm red, 650 nm	271
Q45 – Large design	rectangular 54.1 x 44.5 x 87 mm 54.1 x 44.5 x 103 mm 44.5 x 87.6 x 54.1 mm 44.5 x 102.6 x 54.1 mm 44.5 x 87.6 x 56.4 mm 44.5 x 102.6 x 56.4 mm 44.5 x 87.6 x 60.5 mm 44.5 x 102.6 x 60.5 mm	NAMUR	IP67	-40…+70 °C		6000 60000 9000 300 1070	IR, 880 nm red, 680 nm red, 660 nm	271

Designs and variants

	Design	Output function	Protection class	Ambient temperature	Function	Max. range [mm]	Light type	Page
SLM – Slot sensors	slot sensor 12 x 42 x 80 mm 12 x 52 x 80 mm 12 x 62 x 80 mm 12 x 82 x 80 mm 12 x 112 x 80 mm 12 x 152 x 140 mm 12 x 202 x 140 mm 12 x 252 x 140 mm	PNP/NPN PNP	IP67	-20…+60 °C		–	red, 680 nm	273
DF-G1 – Basic device for plastic fibers	rectangular 10 x 33 x 79.3 mm	NPN PNP	IP50	-10…+55 °C		–	red, 960 nm, 660 nm	275
D10 – Switching output	rectangular 10 x 35.9 x 68.1 mm 10 x 35.9 x 84.4 mm	PNP/NPN	IP50	-10…+55 °C		–	red, 660 nm green, 525 nm	277
D10 Expert – Switching output	rectangular 10.5 x 35.9 x 68.1 mm 10.5 x 35.9 x 84.4 mm	PNP/NPN	IP50	-10…+55 °C		–	red, 660 nm green, 525 nm	277
D10 Expert – Dual switching output	rectangular 10.5 x 35.9 x 68.1 mm 10.5 x 35.9 x 84.4 mm	NPN PNP	IP50	-20…+55 °C		–	red, 680 nm green, 525 nm	278
D10 Expert – Current output	rectangular 10.5 x 35.9 x 68.1 mm 10.5 x 35.9 x 84.4 mm	NPN PNP	IP50	-20…+55 °C		–	red, 680 nm green, 525 nm	278

Hans Turck GmbH & Co. KG ▪ Tel. +49 208 49 52-0 ▪ Fax +49 208 49 52-264

ts and variants

	Design	Output function	Protection class	Ambient temperature	Function	Max. range [mm]	Light type	Page
D10 Expert – Voltage output	rectangular 10.5 x 35.9 x 68.1 mm 10.5 x 35.9 x 84.4 mm	NPN PNP	IP50	-20…+55 °C	P	–	red, 680 nm green, 525 nm	279
QS18F – Basic device for glass fibers	rectangular 15 x 35 x 36.9 mm 15 x 49 x 36.9 mm	NPN PNP	IP67	-20…+70 °C	G	–	IR, 940 nm	282
QS18FP – Basic device for plastic fibers	rectangular 15 x 34.5 x 27.5 mm 15 x 49 x 27.5 mm	NPN PNP	IP67	-20…+70 °C	P	–	red, 660 nm	282
FI22 – Basic device for plastic fibers	rectangular 23 x 14.5 x 50 mm	PNP/NPN	IP67	-10…+55 °C	P	–	red, 660 nm	283
R55F – Base unit for optical fibers	rectangular 30 x 25 x 85.4 mm 30 x 25 x 97 mm	PNP/NPN	IP67	-10…+55 °C	G P	–	IR, 880 nm red, 650 nm green, 525 nm blue, 475 nm white	285
K50 - Beacon for picking processes	cylindrical/threaded Ø 50 x 67.8 mm Ø 50 x 56.8 mm	PNP	IP67	-20…+50 °C		50 100 2000	IR, 880 nm red, 680 nm	287

Designs and variants

	Design	Output function	Protection class	Ambient temperature	Function	Max. range [mm]	Light type	Page
PVA/PVD/PVL – Light screens for picking processes	rectangular 30 x 137.8 x 15 mm 30 x 266.4 x 15 mm 30 x 341.4 x 15 mm 30 x 416.6 x 15 mm 31 x 37.3 x 327.5 mm	PNP PNP/NPN	IP62 IP65	0…+50 °C -40…+70 °C		2000 1500	IR, 880 nm red, 630 nm	289
LX – Light screen for parts detection	rectangular 25.4 x 113.4 x 31.8 mm 25.4 x 189.6 x 31.8 mm 25.4 x 265.8 x 31.8 mm 25.4 x 342 x 31.8 mm 25.4 x 418.2 x 31.8 mm 25.4 x 494.4 x 31.8 mm 25.4 x 570.6 x 31.8 mm 25.4 x 646.8 x 31.8 mm	PNP/NPN	IP65	-20…+70 °C		2000	IR, 880 nm	291
EZ-ARRAY™ – Measuring light screen	rectangular 36 x 227 x 45.2 mm 36 x 379 x 45.2 mm 36 x 529 x 45.2 mm 36 x 678 x 45.2 mm 36 x 828 x 45.2 mm 36 x 978 x 45.2 mm 36 x 1128 x 45.2 mm 36 x 1278 x 45.2 mm 36 x 1578 x 45.2 mm 36 x 1878 x 45.2 mm 36 x 2178 x 45.2 mm 36 x 2478 x 45.2 mm	PNP/analog output	IP65	-40…+70 °C		4000	IR	293
iVu TG – Vision sensor with integrated touch screen	rectangular 81.2 x 95.3 x 51.5 mm	PNP	IP67	0…+50 °C	Area, Blemish, Match	–	IR red white UV, 375 nm green blue	295
iVu BCR – Barcode reader with integrated touch screen	rectangular 81.2 x 95.3 x 51.5 mm	PNP	IP67	0…+50 °C	BCR	–	IR red white	295

Hans Turck GmbH & Co. KG ▪ Tel. +49 208 49 52-0 ▪ Fax +49 208 49 52-264

ts and variants

	Design	Output function	Protection class	Ambient temperature	Function	Max. range [mm]	Light type	Page
iVu Plus TG – Vision sensor with integrated touch screen	rectangular 81.2 x 95.3 x 51.5 mm	PNP/NPN	IP67	0…+50 °C	Area, Blemish, Match, Sort	–	IR red white blue green	297
iVu Plus BCR – Barcode reader with integrated touch screen	rectangular 81.2 x 95.3 x 51.5 mm	PNP/NPN	IP67	0…+50 °C	BCR	–	IR red white	297

Miniature sensors VS1, VS2, VS3, VS4, VSM, T8, Q12

We offer different types of miniature sensors. From the well-priced compact T8 with 8 mm thread, over the extremely small, powerful VS and VSM rectangular types, up to the robust and universally applicable Q12 series.
Made for limited space conditions, these sensors cover the entire power spectrum in terms of operating modes, functionality, range and robustness.

Features

- High performance series for limited spaces
- Short response time of only 1 ms
- Easily aligned through a visible light beam
- LED indicates power-on and light captured
- 3-wire connection, adjustment of light and dark operation, PNP or NPN output
- Protection class IP67
- 2 m connection cable and 150 mm pigtail with male M8 x 1

Type code miniature sensors

VSM4	A	P	6	CV10	Q

VSM4 Series

Series

Q12	rectangular 8 x 26.6 x 12.4 mm
T8	cylinder, 15.8 x 16.3 mm
VS1	rectangular 8.3 x 25.7 x 11.6 mm
VS2	rectangular 12 x 25.1 x 4.7 mm
VS3	rectangular 9 x 25.4 x 16.6 mm
VS4	rectangular 5 x 40 x 7 mm
VSM4	smooth barrel, Ø 4 mm
VSM5	threaded barrel Ø 5 mm
VSMQ	rectangular 5 x 40 x 7 mm

A P Output

Output

B	PNP/NPN
N	NPN
P	PNP

Output function

A	light operation
R	dark operation

6 Operating voltage

Operating voltage

5	10…30 VDC max. 20 mA
6	10…30 VDC max. 25 mA

CV10 Operating mode

Operating mode

CV…	convergent mode 10 – 50 mm
E	emitter
EV	emitter, visible red light
R	receiver
D	diffuse mode
FF	diffuse mode, fixed field
L	opposed mode
LP	opposed mode, polarizing filter
LV	opposed mode, visible red light
XLP	retroreflective mode polarizing filter
XLV	retroreflective mode
CR	chemical resistant housing

Q Electrical connection

Electrical connection

blank	cable connection, 2 m
Q	pigtail with connector, M8 x 1

VS1 – Convergent mode sensor

General data

Protection class	IP54	**Connection**	2 m cable
Operating voltage	10…30 VDC	**Housing material**	ABS
Light type	red, 630 nm	**Ambient temperature**	-20…+55 °C
Function			

Types and data – selection table

Type	Output	Range	w	d
VS1AP5CV10	__, light operation, PNP	10 mm	w087	d461
VS1AP5CV20	__, light operation, PNP	20 mm	w087	d461
VS1RP5CV10	__, dark operation, PNP	10 mm	w087	d461
VS1RP5CV20	__, dark operation, PNP	20 mm	w087	d461

Many different types available, also with connector, see type code

VS2 – Flat design

General data

Protection class	IP67	**Connection**	2 m cable
Housing material	ABS	**Ambient temperature**	-20…+55 °C

Types and data – selection table

Type	Operating voltage	Output	Light type	Range	Function	w	d
VS25EV	–	–	red, 660 nm	0…1200 mm		–	d462
VS2AP5R	10…30 VDC	__, light operation, PNP	–	0…1200 mm		w088	d462
VS2RP5R	10…30 VDC	__, dark operation, PNP	–	0…1200 mm		w088	d462
VS2AP5CV15	10…30 VDC	__, light operation, PNP	red, 660 nm	15 mm		w088	d463
VS2RP5CV15	10…30 VDC	__, dark operation, PNP	red, 660 nm	15 mm		w088	d463
VS2AP5CV30	10…30 VDC	__, light operation, PNP	red, 660 nm	–		w088	d464
VS2RP5CV30	10…30 VDC	__, dark operation, PNP	red, 660 nm	30 mm		w088	d464

Many different types available, also with connector, see type code

w Wiring diagrams on page 658 d Dimension drawing on page 670 Accessories on page 560

VS3 – Retroreflective sensor

General data

Protection class	IP67	**Connection**	2 m cable
Operating voltage	10…30 VDC	**Housing material**	ABS
Light type	red, 680 nm	**Range**	0…250 mm
Ambient temperature	-20…+55 °C	**Function**	

Types and data – selection table

Type	Output	w	d
VS3AP5XLP	__, light operation, PNP	w088	d465
VS3RP5XLP	__, dark operation, PNP	w088	d465

Many different types available, also with connector, see type code

VSM – Stainless steel sensors

General data

Protection class	IP67	**Connection**	2 m cable
Operating voltage	10…30 VDC	**Housing material**	V2A (1.4301)
Ambient temperature	0…+55 °C		

Types and data – selection table

Type	Output	Light type	Range	Function	w	d
VSM46E	–	IR, 880 nm	0…250 mm		w089	d466
VSM4RP6R	__, dark operation, PNP	–	0…250 mm		w088	d466
VSM4AP6CV10	__, light operation, PNP	IR, 880 nm	–		w088	d467
VSM4AP6CV20	__, light operation, PNP	IR, 880 nm	–		w088	d467
VSM4AP6CV50	__, light operation, PNP	IR, 880 nm	–		w088	d466
VSM56E	–	IR, 880 nm	0…250 mm		w089	d468
VSM5RP6R	__, dark operation, PNP	–	0…250 mm		w088	d468
VSM5AP6CV10	__, light operation, PNP	IR, 880 nm	–		w088	d469
VSM5AP6CV20	__, light operation, PNP	IR, 880 nm	–		w088	d469
VSM5AP6CV50	__, light operation, PNP	IR, 880 nm	–		w088	d468
VSMQAP6CV20	__, light operation, PNP	IR, 880 nm	–		w088	d470
VSMQAP6CV50	__, light operation, PNP	IR, 880 nm	–		w088	d470
VSMQAP6CV90	__, light operation, PNP	IR, 880 nm	–		w088	d470

VS4 – Rectangular design

General data

Protection class	IP67	**Connection**	2 m cable
Operating voltage	10…30 VDC	**Housing material**	PC
Range	0…1000 mm	**Ambient temperature**	-20…+55 °C

Types and data – selection table

Type	Output	Light type	Function	w	d
VS4EV	–	red, 660 nm		w089	d471
VS4AP5R	, light operation, PNP	–		w088	d472
VS4RP5R	, dark operation, PNP	–		w088	d472

Many different types available, also with connector, see type code

T8 – Round design

General data

Protection class	IP67	**Connection**	2 m cable
Operating voltage	10…30 VDC	**Housing material**	ABS
Ambient temperature	-20…+55 °C		

Types and data – selection table

Type	Output	Light type	Range	Function	w	d
T86EV	–	red, 660 nm	0…2000 mm		w089	d473
T8AP6R	, light operation, PNP	–	0…2000 mm		w088	d473
T8RP6R	, dark operation, PNP	–	0…2000 mm		w088	d473
T8AP6D50	, light operation, PNP	red, 680 nm	0…50 mm		w088	d473
T8RP6D50	, dark operation, PNP	red, 680 nm	0…50 mm		w088	d473
T8AP6D100	, light operation, PNP	red, 680 nm	0…100 mm		w088	d473
T8RP6D100	, dark operation, PNP	red, 680 nm	0…100 mm		w088	d473

Many different types available, also with connector, see type code

w Wiring diagrams on page 658 d Dimension drawing on page 670 Accessories on page 560

Q12 – Rectangular design

General data

Protection class	IP67	**Connection**	2 m cable
Operating voltage	10…30 VDC	**Housing material**	Elastomere
Ambient temperature	-20…+55 °C		

Types and data – selection table

Type	Output	Light type	Range	Function	w	d
Q126E	–	red, 640 nm	0…2000 mm		w089	d474
Q12AB6R	__, light operation, PNP	–	0…2000 mm		w090	d474
Q12RB6R	__, dark operation, PNP/NPN	–	0…2000 mm		w090	d474
Q12AB6LV	__, light operation, PNP	red, 640 nm	40…1500 mm		w090	d474
Q12RB6LV	__, dark operation, PNP/NPN	red, 640 nm	40…1500 mm		w090	d474
Q12AB6LP	__, light operation, PNP	red, 640 nm	100…1000 mm		w090	d475
Q12RB6LP	__, dark operation, PNP/NPN	red, 640 nm	100…1000 mm		w090	d475
Q12AB6FF15	__, light operation, PNP	red, 640 nm	3…15 mm		w090	d474
Q12RB6FF15	__, light operation, PNP	red, 640 nm	3…15 mm		w090	d474
Q12AB6FF30	__, light operation, PNP	red, 640 nm	3…30 mm		w090	d474
Q12RB6FF30	__, dark operation, PNP/NPN	red, 640 nm	3…30 mm		w090	d474
Q12AB6FF50	__, light operation, PNP	red, 640 nm	3…50 mm		w090	d474
Q12RB6FF50	__, dark operation, PNP/NPN	red, 640 nm	3…50 mm		w090	d474

Many different types available, also with connector, see type code

Wiring diagrams on page 658 Dimension drawing on page 670 Accessories on page 560

M12 – Miniature sensors

The M12 provide many functions incorporated in a rugged metal housing. With a diameter of only 12 mm, they can be mounted even in poorly accessible places. Even under rough operating conditions the IP67 rated sensors work convincingly powerful, such as their bigger counterparts. The operating modes are opposed, retroreflective with/without polarizing filter as well as diffuse mode with fixed background suppression.

Features

- M12 sensor series, threaded barrel, metal
- All operating modes
- Easily aligned through a visible red light beam
- LED indicates power-on and light captured
- PNP or NPN output
- Protection class IP67
- 2 m connection cable, male M12 x 1 or cable with male end M12 x 1

Type code M12

M12	P	FF25	Q8

M12 Series

Series

M12	cylinder, thread M12: 57 x mm

P Output

Output

P	PNP
N	NPN

FF25 Operating mode

Operating mode

D	diffuse mode
E	opposed mode emitter
FF25	diffuse mode fixed field 0…25 mm
LP	retroreflective mode polarizing filter
LV	retroreflective mode visible red light
R	receiver

Q8 Electrical connection

Electrical connection

blank	cable connection, 2 m
Q5	pigtail with connector, Ø 8 mm
Q8	connector, M12 x 1

M12 – Cylindrical design

General data

Protection class	IP68	**Connection**	2 m cable
Operating voltage	10…30 VDC	**Housing material**	CuZn
Ambient temperature	-20…+60 °C		

Types and data – selection table

Type	Output	Light type	Range	Function	w	d
M12E	–	red, 660 nm	0…5000 mm		w089	d476
M12PR	, PNP	–	0…5000 mm		w091	d476
M12PD	, PNP	red, 660 nm	0…400 mm		w091	d476
M12PLV	, PNP	red, 660 nm	0…2500 mm		w091	d476
M12PLP	, PNP	red, 660 nm	20…1500 mm		w091	d476
M12PFF25	, PNP	red, 680 nm	0…25 mm		w091	d476
M12PFF50	, PNP	red, 680 nm	0…50 mm		w091	d476
M12PFF75	, PNP	red, 680 nm	0…75 mm		w091	d476

Many different types available, also with cable, see type code

Many different types available, also with connector and / or NPN output see type code

w Wiring diagrams on page 658 d Dimension drawing on page 670 Accessories on page 560

QS18 – Compact sensors

The compact QS18 fit in almost any place. They are optionally available with M18 thread and can thus replace M18 threaded barrel sensors. They can also be used to replace M30 threaded barrel sensors as well as rectangular sensors without thread.
The QS18 are available in many different operating modes and achieve an optical power which exceeds by far the usual performance of sensors of this size.

Features

- Universal rectangular design, flexible mounting
- Many operating modes, functions and application possibilities
- Response time < 1ms
- Rugged, fully encapsulated plastic housing, protective circuit
- Protection class IP67
- Bright, all-round visible LEDs
- 2 m connection cable, male M12 x 1, cable with male end M12 x 1
- Blind for opposed mode sensors available
- Expert™ QS18E: Easy startup via push-button or remote via cable

Type code QS18

QS18	V	P	6	LP	Q5

QS18 Series

Series

QS18	rectangular, 15 x 35 x 21 15 x 35 x 31 15 x 49 x 21 15 x 49 x 31

V P Output

Output

N	NPN
P	PNP

Output function

E	teach-in/NO
V	NO/NC

6 Operating voltage

Operating voltage

6	10…30 VDC

LP Operating mode

Operating mode

AF100	diffuse mode adjustable field 20…100 mm
CV15	C = convergent mode V = visible red light, focal distance 15 mm
CV16	C = convergent mode V = visible red light focal distance 16 mm
D	diffuse mode
DB	diffuse mode, without blind zone
DV	diffuse mode, visible red light
E	emitter, opposed mode
EB	emitter, opposed mode sensor range 3 m
FF50	diffuse mode, fixed field 0…50 mm
LAF	laser, diffuse mode adjustable field 30…150 mm, class 1
LAF250	laser, diffuse mode adjustable field 50…250 mm, class 2
LD	laser, diffuse mode
LE	laser emitter
LE10	laser emitter, point
LE11	laser emitter, vertical line
LE12	laser emitter, horizontal line
LE14	laser emitter, cross
LLP	laser, retroreflective mode polarizing filter
LP	retroreflective mode polarizing filter, visible red light
LV	retroreflective mode visible red light,
R	receiver, opposed mode
RB	receiver, opposed mode range 3 m
W	diffuse mode, wide angle

Q5 Electrical connection

Electrical connection

Q	pigtail with connector, Ø 8 mm
Q5	pigtail with connector, M12 x 1
Q7	connector, Ø 8 mm
Q8	connector, M12 x 1
blank	cable connection, 2 m

Hans Turck GmbH & Co. KG ▪ Tel. +49 208 49 52-0 ▪ Fax +49 208 49 52-264

QS18 – With thread

General data

Protection class	IP67	**Connection**	male, M12 x 1
Operating voltage	10…30 VDC	**Housing material**	ABS

Types and data – selection table

Type	Output	Light type	Range	Ambient temperature	Function	w	d
QS186EQ8	–	IR, 940 nm	0…30000 mm	-20…+70 °C		w092	d477
QS186LEQ8	–	red, 650 nm, 1	0…30000 mm	-10…+50 °C		w093	d478
QS186LE2Q8	–	IR, 940 nm, 2	0…30000 mm	-10…+50 °C		w094	d477
QS18VP6RQ8	, PNP, 100 mA	–	0…30000 mm	-20…+70 °C		w091	d477
QS18VP6LVQ8	, PNP, 100 mA	red, 660 nm	0…6500 mm	-20…+70 °C		w091	d479
QS18VP6LPQ8	, PNP, 100 mA	red, 660 nm	50…3500 mm	-20…+70 °C		w091	d479
QS18VP6LLPQ8	, PNP, 100 mA	red, 650 nm, 1	100…10000 mm	-10…+50 °C		w091	d479
QS18VP6CV15Q8	, PNP, 100 mA	red, 660 nm	–	-20…+70 °C		w091	d480
QS18VP6CV45Q8	, PNP, 100 mA	red, 660 nm	–	-20…+70 °C		w091	d480
QS18VP6DQ8	, PNP, 100 mA	IR, 940 nm	1…450 mm	-20…+70 °C		w091	d479
QS18VP6LDQ8	, PNP, 100 mA	red, 650 nm, 1	0…300 mm	-10…+50 °C		w091	d479
QS18VP6FF50Q8	, PNP, 100 mA	red, 660 nm	0…50 mm	-20…+70 °C		w091	d477
QS18VP6FF100Q8	, PNP, 100 mA	red, 660 nm	0…100 mm	-20…+70 °C		w091	d477

Many different types available, also with cable, see type code

Many different types available, also with connector and / or NPN output see type code

QS18 – Without thread

General data

Protection class	IP67	**Operating voltage**	10…30 VDC
Housing material	ABS		

Types and data – selection table

Type	Connection	Output	Light type	Range	Ambient temperature	Function	w	d
QS186EBQ8	male, M12 x 1	–	IR, 940 nm	0…3000 mm	-20…+70 °C		w089	d481

Table continues on the next page…

… Table starts on previous page

Type	Connection	Output	Light type	Range	Ambient temperature	Function	w	d
QS18VP6RBQ8	male, M12 x 1	, PNP, 100 mA	–	0…3000 mm	-20…+70 °C		w091	d481
QS18VP6DBQ8	male, M12 x 1	, PNP, 100 mA	IR, 940 nm	0…450 mm	-20…+70 °C		w091	d482
QS18VP6WQ8	male, M12 x 1	, PNP, 100 mA	IR, 940 nm	0…100 mm	-20…+70 °C		w091	d482
QS18VP6AFF200Q5	0.15 m Cable with connector, M12 x 1	, PNP, 100 mA	red, 660 nm	30…200 mm	-20…+55 °C		w091	d483
QS18VP6AFF40Q5	0.15 m Cable with connector, M12 x 1	, PNP, 100 mA	red, 660 nm	15…40 mm	-20…+55 °C		w091	d483
QS18VP6AF300Q5	0.15 m Cable with connector, M12 x 1	, PNP, 100 mA	red, 660 nm	1…300 mm	-20…+55 °C		w091	d483
QS18VP6AF40Q5	0.15 m Cable with connector, M12 x 1	, PNP, 100 mA	red, 660 nm	15…40 mm	-20…+55 °C		w091	d483
QS18VP6AF100Q5	0.15 m Cable with connector, M12 x 1	, PNP, 100 mA	red, 660 nm	1…100 mm	0…+55 °C		w091	d483
QS18VP6LAFQ5	0.15 m Cable with connector, M12 x 1	, PNP, 100 mA	red, 650 nm, 1	1…150 mm	-10…+50 °C		w091	d483
QS18VP6LAF250Q5	0.15 m Cable with connector, M12 x 1	, PNP, 100 mA	red, 658 nm, 2	1…250 mm	-10…+50 °C		w091	d483

Many different types available, also with connector and / or NPN output see type code

Many different types available, also with cable and / or NPN output, see type code

QS18 Expert – With thread

General data

Protection class	IP67	**Connection**	male, M12 x 1
Operating voltage	10…30 VDC	**Output**	, PNP
Housing material	ABS	**Ambient temperature**	-20…+70 °C

Types and data – selection table

Type	Light type	Range	Function	w	d
QS18EP6LPQ8	red, 660 nm	50…3500 mm		w095	d484
QS18EP6CV15Q8	red, 660 nm	–		w095	d484
QS18EP6CV45Q8	red, 660 nm	–		w095	d484
QS18EP6DQ8	IR, 940 nm	0…800 mm		w095	d484
QS18EP6DVBVQ8	red, 660 mm	0…600 mm		w095	d484

Many different types available, also with cable, see type code

Many different types available, also with connector and / or NPN output see type code

QS18 Expert – Without thread

General data

Protection class	IP67	**Connection**	male, M12 x 1
Operating voltage	10…30 VDC	**Output**	⎽╲⎼, PNP
Housing material	ABS	**Light type**	IR, 940 nm
Ambient temperature	-20…+70 °C	**Function**	⊐⇄|

Types and data – selection table

Type	Range	w	d
QS18EP6DBQ8	0…500 mm	w095	d485
QS18EP6WQ8	0…300 mm	w095	d485

Many different types available, also with cable, see type code

Many different types available, also with connector and / or NPN output see type code

w Wiring diagrams on page 658 d Dimension drawing on page 670 Accessories on page 560

TM18 – Compact sensors

The TM18 series features devices incorporated in a rugged metal and IP69K rated housing. They are perfectly suitable for demanding application conditions. Thanks to the M18 thread and the bright, red light beam, the sensors are easily installed. Further adjustments are not necessary for optimal operation of the device. The diffuse mode as well as the retroreflective sensors are insensitive to ambient light and interferences caused by other TM18 sensors.

Features

- Rugged metal housing with M18 x 1 metal thread
- Easily installed in all M18 feed-throughs
- All operating modes available
- Easy alignment thanks to bright, red light beam
- Protection class IP69K, for wet environments

Type code TM18

TM18	V	N	6	R	Q8

TM18	Series	V	Switching behaviour	N	Output

Series
TM18 cylinder, thread M18: Ø 30 mm

Switching behaviour
V changeover
A light operation
R dark operation

Output
N NPN
P PNP

6	Operating voltage	R	Operating mode	Q5	Electrical connection

Operating voltage
6 10…30 VDC

Operating mode
E emitter
R receiver
LP retroreflective mode polarizing filter
FF25 diffuse mode, fixed field 0…25 mm
FF50 diffuse mode, fixed field 0…50 mm
FF100 diffuse mode, fixed field 0…100 mm

Electrical connection
Q5 M12 x 1 connector with 0.5 m cable
blank cable connection, 2 m

TM18 – Round design with metal housing

General data

Protection class	IP67 / IP69K	**Connection**	male, M12 x 1
Operating voltage	10…30 VDC	**Housing material**	CuZn
Ambient temperature	-40…+70 °C		

Types and data – selection table

Type	Output	Light type	Range	Function	w	d
TM186EQ8	–	red, 625 nm	0…20000 mm		w089	d486
TM18AP6RQ8	, light operation, PNP	–	0…20000 mm		w088	d486
TM18RP6RQ8	, dark operation, PNP	–	0…20000 mm		w096	d486
TM18VP6RQ8	, PNP	–	0…20000 mm		w091	d486
TM18AP6LPQ8	, light operation, PNP	red, 680 nm	0…5500 mm		w088	d486
TM18RP6LPQ8	, dark operation, PNP	red, 680 nm	0…5500 mm		w096	d486
TM18VP6LPQ8	, PNP	red, 680 nm	0…5500 mm		w091	d486
TM18AP6FF25Q8	, light operation, PNP	red, 660 nm	0…25 mm		w088	d486
TM18VP6FF25Q8	, PNP	red, 660 nm	0…25 mm		w091	d486
TM18AP6FF50Q8	, light operation, PNP	red, 660 nm	0…50 mm		w088	d486
TM18VP6FF50Q8	, PNP	red, 660 nm	0…50 mm		w091	d486
TM18AP6FF100Q8	, light operation, PNP	red, 660 nm	0…100 mm		w088	d486
TM18VP6FF100Q8	, PNP	red, 660 nm	0…100 mm		w091	d486

Many different types available, also with cable, see type code

w Wiring diagrams on page 658 d Dimension drawing on page 670 Accessories on page 560

Compact sensors S18, M18, T18 and Q25

EZ-BEAM sensors are compact, easy to install and work reliably, even under rough operating conditions. Sensitivity adjustments are redundant for most of the types. EZ-BEAM sensors are available in different sizes, designs and operating modes: Plastic and threaded barrels or rectangular types, opposed mode, retroreflective mode with/without polarizing filter as well as diffuse mode with background suppression.

Features

- Low-priced, high performance, IP69K rated (most types)
- No adjustments (most types)
- Auto-diagnostics with separate display for insufficient excess gain and alarm output
- Extended temperature range -40 … +70 °C
- Antivalent PNP/NPN output, AC versions available
- Blind for opposed mode sensors available

Type code EZ-Beam

Q25	S	P	6	LP	Q

Q25 Series

Series

M18	thread, metal, Ø 18 mm
Q25	rectangular, 25 x 50.2 x 30 mm
Q40	rectangular, 40 x 40 x 46 mm
S18	cylinder, Ø 18 mm
S30	thread, plastic, Ø 30 mm
T18	30 x 54 x 30 mm, angled, thread Ø 18 mm
T30	40 x 64 x 45 mm, angled dimensions, thread Ø 30 mm

S Output function

Output function

S	programmable*

* selectable light/dark operation or light operation and alarm

P Output

Output

P	PNP
N	NPN

6 Operating voltage

Operating voltage

6	10…30 VDC

LP Operating mode

Operating mode

E	opposed mode emitter
R	receiver
D	diffuse mode
DL	diffuse mode, long distance
FF600	diffuse mode, fixed field 0…600 mm
LP	retroreflective mode polarizing filter
L	retroreflective mode infrared light
ELD	opposed mode laser emitter (only S18)

Q Electrical connection

Electrical connection

blank	cable connection, 2 m
Q	connection, M12 x 1

S18 – Cylindrical design

General data

Protection class	IP67 / IP69K	**Connection**	male, M12 x 1
Operating voltage	10…30 VDC	**Housing material**	PBT
Ambient temperature	-40…+70 °C		

Types and data – selection table

Type	Output	Light type	Range	Function	w	d
S186EQ	–	IR, 950 nm	0…20000 mm		w089	d487
S18SP6RQ	, , PNP	–	0…20000 mm		w097	d487
S18SP6LQ	, , PNP	IR, 950 nm	50…2000 mm		w097	d487
S18SP6LPQ	, , PNP	red, 680 nm	50…2000 mm		w097	d487
S18SP6FF25Q	, , PNP	IR, 880 nm	0…25 mm		w097	d488
S18SP6FF50Q	, , PNP	IR, 880 nm	0…50 mm		w097	d488
S18SP6FF100Q	, , PNP	IR, 880 nm	0…100 mm		w097	d488
S18SP6DLQ	, , PNP	IR, 880 nm	2…300 mm		w097	d487

Many different types available, also with cable and / or NPN output, see type code

Many different types available, also with connector and / or NPN output see type code

M18 – Cylindrical design with metal housing

General data

Protection class	IP67 / IP69K	**Connection**	male, M12 x 1
Operating voltage	10…30 VDC	**Housing material**	V2A (1.4305)
Ambient temperature	-40…+70 °C		

Types and data – selection table

Type	Output	Light type	Range	Function	w	d
M186EQ	–	IR, 950 nm	0…20000 mm		w089	d489
M18SP6RQ	, , PNP	–	0…20000 mm		w097	d489
M18SP6LQ	, ,	IR, 950 nm	50…2000 mm		w097	d489
M18SP6LPQ	, , PNP	red, 680 nm	50…2000 mm		w097	d489

Table continues on the next page…

… Table starts on previous page

Type	Output	Light type	Range	Function	w	d
M18SP6FF25Q	⊥⟋, _⟋,	IR, 880 nm	0…25 mm	⇄ |X	w097	d490
M18SP6FF50Q	⊥⟋, _⟋,	IR, 880 nm	0…50 mm	⇄ |X	w097	d490
M18SP6FF100Q	⊥⟋, _⟋,	IR, 880 nm	0…100 mm	⇄ |X	w097	d490
M18SP6DQ	⊥⟋, _⟋,	IR, 880 nm	0…100 mm	⇄ |	w097	d489
M18SP6DLQ	⊥⟋, _⟋,	IR, 880 nm	2…300 mm	⇄ |	w097	d489

Many different types available, also with cable and / or NPN output, see type code

Many different types available, also with connector and / or NPN output see type code

T18 – Round design

General data

Protection class	IP67 / IP69K	**Connection**	male, M12 x 1
Operating voltage	10…30 VDC	**Housing material**	PBT
Ambient temperature	-40…+70 °C		

Types and data – selection table

Type	Output	Light type	Range	Function	w	d
T186EQ	–	IR, 950 nm	0…20000 mm	→ ▨	w089	d491
T18SP6RQ	⊥⟋, _⟋,	–	0…20000 mm	▨ → ⊂	w097	d491
T18SP6LQ	⊥⟋, _⟋,	IR, 950 nm	50…2000 mm	⇄ ⁞	w097	d491
T18SP6LPQ	⊥⟋, _⟋,	red, 680 nm	50…2000 mm	P ⇄ ⁞	w097	d491
T18SP6DQ	⊥⟋, _⟋,	IR, 880 nm	0…500 mm	⇄ |	w097	d492
T18SP6FF25Q	⊥⟋, _⟋,	IR, 880 nm	0…25 mm	⇄ |X	w097	d491
T18SP6FF50Q	⊥⟋, _⟋,	IR, 880 nm	0…50 mm	⇄ |X	w097	d491
T18SP6FF100Q	⊥⟋, _⟋,	IR, 880 nm	0…100 mm	⇄ |X	w097	d491

Many different types available, also with cable and / or NPN output, see type code

Many different types available, also with connector and / or NPN output see type code

Q25 – Rectangular design

General data

Protection class	IP67 / IP69K	**Connection**	male, M12 x 1
Operating voltage	10…30 VDC	**Housing material**	PBT
Ambient temperature	-40…+70 °C		

Types and data – selection table

Type	Output	Light type	Range	Function	w	d
Q256EQ	–	IR, 950 nm	0…20000 mm		w089	d493
Q25SP6RQ	, ,	–	0…20000 mm		w097	d493
Q25SP6LPQ	, ,	red, 680 nm	50…2000 mm		w097	d493
Q25SP6FF25Q	, ,	IR, 880 nm	0…25 mm		w097	d493
Q25SP6FF50Q	, ,	IR, 880 nm	0…50 mm		w097	d493
Q25SP6FF100Q	, ,	IR, 880 nm	0…100 mm		w097	d493

Many different types available, also with cable and / or NPN output, see type code

Many different types available, also with connector and / or NPN output see type code

w Wiring diagrams on page 658 d Dimension drawing on page 670 Accessories on page 560

Q20 – compact sensors

The rectangular Q20 are quickly and easily mounted. Bores with integrated thread make the use of additional mounting nuts redundant. Whether applied as opposed mode, retroreflective or diffuse mode sensor, the compact Q20 are striking for their outstanding optical power and reliability. Thanks to the compact design they fit everywhere, even in confined spaces.

Features

- 3 mm thread bores, 25.4 mm inbetween space
- Easily aligned thanks to visible light beam (most types)
- Protection class IP67
- Excellent protection against interferences and crosstalk
- Antivalent transistor outputs (1 NO, 1 NC); PNP or NPN
- 2 m connection cable, male M8 x 1, cable with male end M8 x 1, cable with male end M12 x 1

Type code Q20

Q20	P	DXL	Q5

Q20 Series

Series

Q20	rectangular, 12 x 32 x 20 mm (cable device) 12 x 42 x 20 mm (plug-in device)

P Output

Output

P	PNP
N	NPN

DXL Operating mode

Operating mode

E	opposed mode emitter
R	opposed mode receiver
FF25	diffuse mode, fixed field 0…25 mm
EL	emitter, long range
RL	receiver, long range
LP	retroreflective mode polarizing filter
LV	retroreflective mode visible red light
DL	diffuse mode, long range
DXL	diffuse mode sensor extra long range
DV	diffuse mode, visible red light

Q5 Electrical connection

Electrical connection

blank	cable connection, 2 m
Q	pigtail with connector, M8 x 1
Q5	pigtail with connector, M12 x 1
Q8	connector, M8 mm

Q20 – Rectangular design

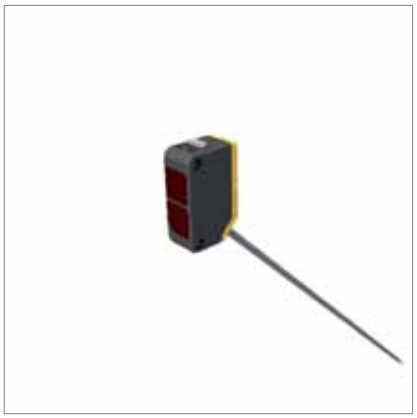

General data

Protection class	IP67	**Connection**	0.15 m Cable with connector, M12 x 1
Operating voltage	10…30 VDC	**Housing material**	ABS
Ambient temperature	-20…+60 °C		

Types and data – selection table

Type	Output	Light type	Range	Function	w	d
Q20EQ5	–	red, 630 nm	0…12000 mm		w089	d494
Q20PRQ5	, PNP	–	0…12000 mm		w091	d494
Q20ELQ5	–	IR, 850 nm	0…20000 mm		w089	d494
Q20PRLQ5	, PNP	–	0…20000 mm		w091	d494
Q20PLVQ5	, PNP	red, 660 nm	30…6000 mm		w091	d495
Q20PLPQ5	, PNP	red, 660 nm	30…4000 mm		w091	d495
Q20PDQ5	, PNP	red, 630 nm	1…250 mm		w091	d495
Q20PDLQ5	, PNP	red, 630 nm	1…800 mm		w091	d495
Q20PDXLQ5	, PNP	IR, 850 nm	1…1500 mm		w091	d495
Q20PFF50Q5	, PNP	red, 660 nm	0…50 mm		w091	d494
Q20PFF100Q5	, PNP	red, 660 nm	0…100 mm		w091	d494
Q20PFF150Q5	, PNP	red, 660 nm	0…150 mm		w091	d494

Many different types available, also with cable and / or NPN output, see type code

Many different types available, also with connector and / or NPN output see type code

Wiring diagrams on page 658 Dimension drawing on page 670 Accessories on page 560

Compact sensors Q26 for clear object detection

The Q26 works on the retroreflective principle, using a polarizing filter which is especially designed for the detection of clear-glass objects. By means of the coaxially arranged optics, the light beam hits the reflector vertically. Transparent, opaque or reflecting objects are thus reliably detected. Objects located anywhere between sensor and reflector are detected with this single-lens system. The sensitivity is adjusted via potentiometer. The output is also adjustable. Light or dark operation is set via rotary switch. A very short response time of only 250 µs is a further plus.

Features

- Reliable detection of clear-glass
- Single-lens system with small inspection window
- No blind zone, short distances to reflector
- Need not be aligned
- Repeatability 50 µs, response time 250 µs
- Sensitivity adjusted via potentiometer

Type code Q26

Q26	P	XLP	Q7

Q26	Series	P	Output	XLP	Operating mode

Series
Q26 rectangular, 14 x 25 x 52.3 mm

Output/Function
P PNP
N NPN

Operating mode
XLP retroreflective mode polarizing filter

Q7	Electrical connection

Electrical connection
Q5 pigtail with connector, M12 x 1
Q7 connector, Ø 8 mm

Hans Turck GmbH & Co. KG ▪ Tel. +49 208 49 52-0 ▪ Fax +49 208 49 52-264

Q26 – Rectangular design

General data

Protection class	IP67	**Connection**	male, M8 x 1
Operating voltage	12…30 VDC	**Switching frequency**	4 kHz
Housing material	ABS	**Light type**	red, 660 nm
Range	5…800 mm	**Ambient temperature**	-10…+55 °C
Function			

Types and data – selection table

Type	Output	w	d
Q26NXLPQ7	2x ⎽╲⎽, NPN	w098	d496
Q26PXLPQ7	2x ⎽╲⎽, PNP	w099	d496

Many different types available, also with cable with connector, see type code

w Wiring diagrams on page 658 d Dimension drawing on page 670 Accessories on page 560

QS30 – Large design

The large QS30 can be mounted in many ways. Thanks to the M30 thread and standard bores, they can also be used to replace M30 threaded barrel sensors as well as rectangular sensors without thread.

The QS30 series offers many operating modes, functions and application possibilities

Features

- Universal rectangular design, many mounting options
- Many operating modes, functions and application possibilities
- Pushbutton or external programming
- Good visible status, indicated via 8-segment bargraph display
- Plastic housing, protection class IP67
- Bipolar digital outputs, PNP/NPN
- 30 ms switch-off delay (adjustable)
- 2 m connection cable or male M12 x 1

Type code QS30

QS30	FF600	Q

QS30	Series	FF600	Operating mode

Series

QS30	rectangular, 22 x 49 x 35 mm (cable device) 22 x 57 x 35 mm (plug-in device)

Q	Electrical connection

Electrical connection

Q	connection, M12 x 1
Q5	pigtail with connection, M12 x 1
blank	cable connection, 2 m

Operating mode

AF400	diffuse mode sensor with adjustable field, bargraph display 0…400 mm
ARX	receiver, high-power light operation
ARXH20	receiver high-power, light operation, water detection
ARH20	receiver, light operation, water detection
D	diffuse mode
E	opposed mode emitter
EDV	diffuse mode, teachable visible red light bargraph display
ELVC	retroreflective mode, visible red light, clear-glass recognition, bargraph display
EX	opposed mode emitter high-power
EXH20	opposed mode emitter high-power, water detection
FF600	diffuse mode, fixed field 0…600 mm
LD	laser, diffuse mode bargraph display
LDL	laser, diffuse mode, long distance, bargraph display
LLP	laser, retroreflective mode polarizing filter bargraph display
LLPC	laser, retroreflective mode polarizing filter, clear-glass recognition, bargraph display
LP	retroreflective mode polarizing filter
LV	retroreflective mode
R	opposed mode receiver
RRH20	receiver, dark operation water detection
RRX	receiver, high-power dark operation
RRXH20	receiver, high-power dark operation water detection

QS30 – Rectangular design

General data

Protection class	IP67	**Connection**	male, M12 x 1
Operating voltage	10…30 VDC	**Housing material**	ABS

Types and data – selection table

Type	Output	Light type	Range	Ambient temperature	Function	w	d
QS30EQ	–	IR, 875 nm	0…60000 mm	-20…+70 °C		w089	d497
QS30RQ	, PNP/NPN	–	0…60000 mm	-20…+70 °C		w100	d497
QS30LVQ	, PNP/NPN	red, 630 nm	10…12000 mm	-20…+70 °C		w100	d498
QS30LPQ	, PNP/NPN	red, 630 nm	0…8000 mm	-20…+70 °C		w100	d498
QS30DQ	, PNP/NPN	IR, 940 nm	2…1000 mm	-20…+70 °C		w101	d498
QS30AF600Q	, PNP/NPN	red, 660 nm	50…600 mm	-10…+55 °C		w102	d499
QS30AFF400Q	, PNP/NPN	red, 660 nm	50…400 mm	-10…+55 °C		w102	d499
QS30FF200Q	, PNP/NPN	red, 680 nm	0…200 mm	-20…+70 °C		w101	d497
QS30FF400Q	, PNP/NPN	red, 680 nm	0…400 mm	-20…+70 °C		w101	d497
QS30FF600Q	, PNP/NPN	red, 680 nm	0…600 mm	-20…+70 °C		w101	d497

Many different types available, also with cable, see type code

QS30 – Expert

General data

Protection class	IP67	**Connection**	male, M12 x 1
Operating voltage	10…30 VDC	**Output**	, PNP/NPN
Housing material	ABS		

Types and data – selection table

Type	Light type	Range	Ambient temperature	Function	w	d
QS30LLPQ	red, 650 nm, 1	200…18000 mm	-10…+50 °C		w102	d500
QS30LLPCQ	red, 650 nm, 1	200…18000 mm	-10…+50 °C		w102	d500
QS30ELVCQ	red, 660 nm	100…2000 mm	-10…+55 °C		w102	d500
QS30EDVQ	red, 660 nm	2…1400 mm	-10…+55 °C		w102	d500
QS30LDQ	red, 650 nm, 1	0…400 mm	-10…+50 °C		w102	d500
QS30LDLQ	red, 650 nm, 2	0…800 mm	-10…+50 °C		w102	d500

Many different types available, also with cable, see type code

QS30 – Water-detection sensor

General data

Protection class	IP67	**Connection**	0.15 m Cable with connector, M12 x 1
Operating voltage	10…30 VDC	**Response time**	3 ms
Housing material	ABS	**Ambient temperature**	-20…+60 °C

Types and data – selection table

Type	Output	Light type	Range	Function	w	d
QS30EXH2OQ5	–	IR, 1450 nm	0…4000 mm		w103	d501
QS30ARH2OQ5	, light operation, PNP/NPN	–	0…2000 mm		w104	d499
QS30RRH2OQ5	, dark operation, PNP/NPN	–	0…2000 mm		w104	d502
QS30ARXH2OQ5	, light operation, PNP/NPN	–	0…4000 mm		w104	d499
QS30RRXH2OQ5	, dark operation, PNP/NPN	–	0…4000 mm		w104	d502

Many different types available, also with cable, see type code

Wiring diagrams on page 658 Dimension drawing on page 670 Accessories on page 560

S30, T30, Q40 – Large designs

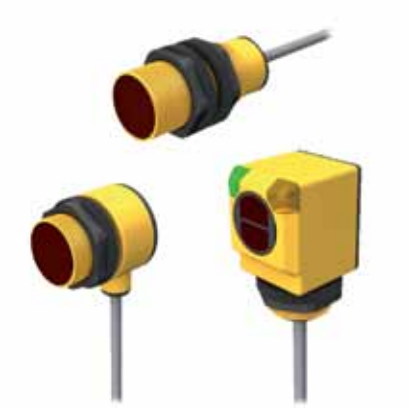

EZ-BEAM sensors are compact, easy to install and work reliably, even under rough operating conditions. Sensitivity adjustments are redundant for most of the types. EZ-BEAM sensors are available in different sizes, designs and operating modes: Plastic and threaded barrels or rectangular types, opposed mode, retroreflective moded with/without polarizing filter as well as diffuse mode with background suppression.

Features

- Low-priced, high performance, IP69K rated (most types)
- No adjustments (most types)
- Auto-diagnostics with separate display for insufficient excess gain and alarm output
- Extended temperature range -40 … +70 °C
- Antivalent PNP/NPN output, AC versions available
- Blind for opposed mode sensors available

Type code EZ-Beam – Large

S30	S	P	6	LP	Q

S30 Series

Series

Q40	rectangular, 40 x 40 x 46 mm
S30	thread, plastic, Ø 30 mm
T30	40 x 64 x 45 mm, angled, thread Ø 30 mm

S Output function

Output function

S	programmable*

* selectable light/dark operation or light operation and alarm

P Output

Output

P	PNP
N	NPN

6 Operating voltage

Operating voltage

6	10…30 VDC

LP Operating mode

Operating mode

D	diffuse mode
DL	diffuse mode, long distance
E	emitter
ELD	opposed mode laser emitter (only S18)
FF600	diffuse mode, fixed field 0…600 mm
LP	retroreflective mode polarizing filter
L	retroreflective mode, infrared
R	receiver

Q Electrical connection

Electrical connection

blank	cable connection, 2 m
Q	connector, M12 x 1

S30 – Cylindrical design

General data

Protection class	IP67 / IP69K	**Connection**	male, M12 x 1
Operating voltage	10…30 VDC	**Housing material**	PBT
Ambient temperature	-40…+70 °C		

Types and data – selection table

Type	Output	Light type	Range	Function	w	d
S306EQ	–	IR, 950 nm	0…60000 mm		w089	d503
S30SP6RQ	, , PNP	–	0…60000 mm		w097	d503
S30SP6LPQ	, , PNP	red, 680 nm	50…6000 mm		w097	d503
S30SP6FF200Q	, , PNP	IR, 880 nm	0…200 mm		w097	d503
S30SP6FF400Q	, , PNP	IR, 880 nm	0…400 mm		w097	d503
S30SP6FF600Q	, , PNP	IR, 880 nm	0…600 mm		w097	d503

Many different types available, also with cable, see type code

T30 – Round design

General data

Protection class	IP67 / IP69K	**Connection**	male, M12 x 1
Operating voltage	10…30 VDC	**Housing material**	PBT
Ambient temperature	-40…+70 °C		

Types and data – selection table

Type	Output	Light type	Range	Function	w	d
T306EQ	–	IR, 950 nm	0…60000 mm		w089	d504
T30SP6RQ	, , PNP	–	0…60000 mm		w097	d504
T30SP6LPQ	, , PNP	red, 680 nm	50…6000 mm		w097	d504
T30SP6FF200Q	, , PNP	IR, 880 nm	0…200 mm		w097	d504
T30SP6FF400Q	, , PNP	IR, 880 nm	0…400 mm		w097	d504
T30SP6FF600Q	, , PNP	IR, 880 nm	0…600 mm		w097	d504

Many different types available, also with cable, see type code

w Wiring diagrams on page 658 d Dimension drawing on page 670 Accessories on page 560

Q40 – Rectangular design

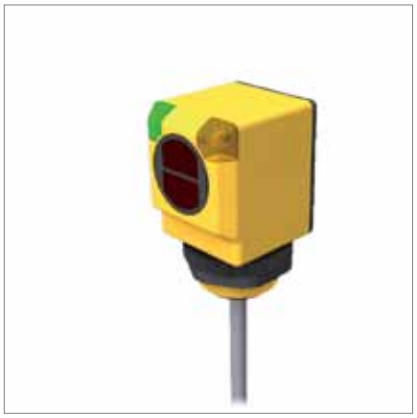

General data

Protection class	IP67 / IP69K	**Connection**	male, M12 x 1
Operating voltage	10…30 VDC	**Housing material**	PBT
Ambient temperature	-40…+70 °C		

Types and data – selection table

Type	Output	Light type	Range	Function	w	d
Q406EQ	–	IR, 950 nm	0…60000 mm		w089	d505
Q40SP6RQ	, , PNP	–	0…60000 mm		w097	d505
Q40SP6LPQ	, , PNP	red, 680 nm	50…6000 mm		w097	d505
Q40SP6FF200Q	, , PNP	IR, 880 nm	0…200 mm		w097	d505
Q40SP6FF400Q	, , PNP	IR, 880 nm	0…400 mm		w097	d505
Q40SP6FF600Q	, , PNP	IR, 880 nm	0…600 mm		w097	d505

Many different types available, also with cable, see type code

Hans Turck GmbH & Co. KG ▪ Tel. +49 208 49 52-0 ▪ Fax +49 208 49 52-264

Wiring diagrams on page 658 Dimension drawing on page 670 Accessories on page 560

Large designs – QM42, QMT42

The rectangular QM42 and QMT42 are installed in a IP67 rated die-cast housing and are especially suited for rugged industrial environments. Standard bores enable flexible mounting. QM42 as well as the slightly bigger QMT42 are available in various operating modes and with excellent background suppression.

Features

- Universal rectangular design, many mounting options
- Many operating modes, functions and application possibilities
- Good visible status LEDs
- Metal housing, ZN, black
- Protection class IP67
- Bipolar digital outputs, PNP/NPN
- 2 m connection cable or male M12 x 1

Type code QM42 / QMT42

QM42	VP	6	R	Q

QM42	Series	VP	Output	6	Operating voltage

Series

QM42	rectangular 12.7 x 42 x 27.1 mm
QMT42	rectangular 18 x 58 x 27.1 mm

Output

VP	changeover PNP
VN	changeover NPN

Operating voltage

6	10…30 VDC

R	Operating mode	Q	Electrical connection

Operating mode

AFV150	diffuse mode adjustable field 0…150 mm
D	diffuse mode
DX	diffuse mode, long range
E	emitter
ELD	opposed mode laser emitter (only S18)
FF500	diffuse mode, fixed field 0…500 mm
LP	retroreflective mode polarizing filter
R	receiver

Electrical connection

blank	cable connection, 2 m
Q	connector, M12 x 1

Hans Turck GmbH & Co. KG ▪ Tel. +49 208 49 52-0 ▪ Fax +49 208 49 52-264

QM42 – Rectangular design

General data

Protection class	IP67	**Connection**	male, M12 x 1
Operating voltage	10…30 VDC	**Housing material**	ZN

Types and data – selection table

Type	Output	Light type	Range	Ambient temperature	Function	w	d
QM426EQ	–	IR, 880 nm	0…10000 mm	-20…+70 °C		w089	d506
QM42VP6RQ	, PNP	–	0…10000 mm	-20…+70 °C		w091	d506
QM42VP6LPQ	, PNP	red, 660 nm	150…3000 mm	-20…+70 °C		w091	d506
QM42VP6DQ	, PNP	IR, 880 nm	0…400 mm	-20…+70 °C		w091	d506
QM42VP6AF150Q	, PNP	IR, 880 nm	50…150 mm	-20…+55 °C		w091	d506

Many different types available, also with cable, see type code

QMT42 – Rectangular design

General data

Protection class	IP67	**Connection**	male, M12 x 1
Operating voltage	10…30 VDC	**Output**	, PNP
Housing material	ZN	**Ambient temperature**	-20…+55 °C

Types and data – selection table

Type	Light type	Range	Function	w	d
QMT42VP6DXQ	IR, 880 nm	10…6000 mm		w091	d507
QMT42VP6FF750Q	IR, 880 nm	50…750 mm		w091	d507
QMT42VP6FF1000Q	IR, 880 nm	50…1000 mm		w091	d507
QMT42VP6FF1500Q	IR, 880 nm	50…1500 mm		w091	d507
QMT42VP6AFV400Q	red, 680 nm	125…400 mm		w091	d508
QMT42VP6FF500Q	IR, 880 nm	50…500 mm		w091	d507
QMT42VP6FF2000Q	IR, 880 nm	50…2000 mm		w091	d507

Many different types available, also with cable, see type code

w Wiring diagrams on page 658 d Dimension drawing on page 670 Accessories on page 560

Q45 – Large design

The innovative, one-piece Q45 sensors provide high optical power. The extremely rugged housing exceeds the NEMA 6P standards and protection rating IP67. The sensors even withstand pressure of 1200 psi easily.
The sensors are powered either via a 2 m cable or a male M12 x 1 connection. Depending on the type, the sensitivity and the output (light or dark operation) can be adjusted. Moreover, the devices feature LEDs for indication of power and status.

Features

- Universal rectangular design, many mounting options
- Plastic housing, protection class IP67
- Many operating modes, functions and application possibilities
- LEDs indicate power ON, status and excess gain
- 2 m connection cable or male M12 x 1

Type code Q45

Q45	BB	6	LV	Q

Q45	Series	BB	Output	6	Operating voltage

Series
Q45 rectangular, 30 x 37.6 x 44.5 mm

Output
BB bipolar, adjustable (NO/NC)

Operating voltage
6 10…30 VDC

LV	Operating mode	Q	Electrical connection

Operating mode
CV convergent mode, visible red light
D diffuse mode
DL diffuse mode, long range
DX diffuse mode, High-Power
E emitter
LL retroreflective mode
LP retroreflective mode polarizing filter
LV retroreflective mode
R receiver

Electrical connection
blank cable connection, 2 m
Q5 connector, M12 x 1, 4-pole
Q6 connector, M12 x 1, 5-pole

Q45 - Rectangular design

General data

Protection class	IP67	**Connection**	male, M12 x 1
Operating voltage	10…30 VDC	**Housing material**	PBT

Types and data – selection table

Type	Output	Light type	Range	Ambient temperature	Function	w	d
Q456EQ5	–	IR, 880 nm	0…60000 mm	-40…+70 °C		w089	d509
Q45BB6RQ5	__, PNP/NPN	–	0…60000 mm	-40…+70 °C		w090	d509
Q45BB6LPQ5	__, PNP/NPN	red, 650 nm	150…6000 mm	-40…+70 °C		w090	d510
Q45BB6LVQ5	__, PNP/NPN	red, 680 nm	80…9000 mm	-40…+70 °C		w090	d510
Q45BB6LLPQ6	__, PNP/NPN	red, 655 nm, ⚠ 2	600…40000 mm	-10…+40 °C		w105	d511
Q45BB6LLQ6	__, PNP/NPN	red, 655 nm, ⚠ 2	300…70000 mm	-10…+40 °C		w105	d511
Q45BB6DQ5	__, PNP/NPN	IR, 880 nm	0…450 mm	-40…+70 °C		w090	d509
Q45BB6DLQ5	__, PNP/NPN	IR, 880 nm	0…1800 mm	-40…+70 °C		w090	d509
Q45BB6DXQ5	__, PNP/NPN	IR, 880 nm	0…3000 mm	-40…+70 °C		w090	d509
Q45BB6CVQ5	__, PNP/NPN	red, 680 nm	–	-40…+70 °C		w090	d509
Q45BB6CV4Q5	__, PNP/NPN	red, 680 nm	–	-40…+70 °C		w090	d509

Many different types available, also with cable, see type code

w Wiring diagrams on page 658 d Dimension drawing on page 670 Accessories on page 560

Laser/LED sensors Q60

The Q60 series comprises sensors working with laser or visible red light. They are long-range operating devices with programmable background suppression. Objects with low reflectivity are detected reliably while objects located just beyond the sensing field are ignored. The cutoff point is set via a two-turn adjusting screw. Output timing, light/dark operate and keylock are programmed remotely or via two pushbuttons. Configuration and operating status are indicated by a 7-LED bargraph. Five of the seven LEDs combine to form a single light bar indicating relative ON and OFF delay.

Features

- Sensors with adjustable background suppression
- Measuring ranges 200 … 2000 mm
- Easy setting of cutoff point
- Laser or LED sensors (infrared or visible red light)
- Easy programming via integrated pushbutton or remotely.
- Light or dark operation
- Seven LEDs indicate configuration and operating status
- Rugged IP67 rated housing

Type code Q60

Q60	BB	6	L	AF	1400	Q

Q60 Series

Series
Q60 Laser-/LED Sensors, rectangular, 25 x 70 x 60 mm

BB Output

Output
BB PNP/NPN bipolar
VR relay output (changeover contact)

6 Operating voltage

Operating voltage
6 10…30 VDC,
3 12…250 VDC or 24…250 VAC

L Sensor type

Sensor type
blank LED sensor
L laser sensor

AF Background suppression

Background suppression
AF adjustable field, infrared light
AFV adjustable field, visible red light

1400 Max. range [mm]

Max. range [mm]
1400 max. range [mm]

Q Electrical connection

Electrical connection
blank cable connection, 2 m
Q connector, M12 x 1

Hans Turck GmbH & Co. KG ▪ Tel. +49 208 49 52-0 ▪ Fax +49 208 49 52-264

Q60 – Rectangular design

General data

Protection class	IP67	**Connection**	male, M12 x 1
Operating voltage	10…30 VDC	**Output**	⎽╲⎽, PNP/NPN
Housing material	ABS		

Types and data – selection table

Type	Light type	Range	Ambient temperature	Function	w	d
Q60BB6AFV1000Q	red, 665 nm	200…1000 mm	-20…+55 °C		w102	d512
Q60BB6AF2000Q	IR, 880 nm	200…2000 mm	-20…+55 °C		w102	d512
Q60BB6LAF1400Q	red, 650 nm, ⚠ 1	200…1400 mm	-10…+50 °C		w102	d512
Q60BB6LAF2000Q	red, 650 nm, ⚠ 2	200…2000 mm	-10…+50 °C		w102	d512

Many different types available, also with cable, see type code

w Wiring diagrams on page 658 d Dimension drawing on page 670 Accessories on page 560

QC50 – Color sensor

The QC50 is a user-friendly compact color sensor. It detects one, two or three colors, by means of modulated white light and electronic red, green and blue filters (R, G, B). Thanks to its compact size it fits almost anywhere. The user can adjust the parameters for color detection as well as an optional switch-off delay for the output.
The sensor is equipped with three transistor outputs which can be adjusted either to distinguish between colors or to distinguish between colors and different color intensities. Furthermore, there are two buttons (SET and SELECT), a 4-digit LCD display, an output LED and three status LEDs (one per output) for easy programming and status monitoring.

Features

- Analysis and comparison of different colors and color intensities
- Short response time of 335 µs
- Easily programmed for 1,2 or 3 colors
- Channel, operating mode and tolerance are programmable
- With tolerance to compensate product variance
- Output switch-off delay (6 options); Adjustments are valid for all three color channels
- Gate-controlled color detection (also called locking, synchronization or windowing)
- Male M12 x 1 with 3 positions, rotatable, 8-pin
- 3 NPN or 3 PNP outputs, one output per color channel

Type code QC50

QC50	A3P	6X	D	W	Q

QC50 Series

Series
- **QC50** rectangular, 25 x 50 x 50 mm, 335 µs response time
- **QCX50** rectangular, 25 x 50 x 50 mm, 5/1 ms response time

A3P Output

Output
- **A3P** 3 x PNP, light operation
- **A3N** 3 x NPN, light operation

6X Operating voltage

Operating voltage
- **6X** 10…30 VDC, 2 V max. residual ripple

D Operating mode

Operating mode
- **D** diffuse mode

W Light type

Light type
- **W** white

Q Electrical connection

Electrical connection
- **blank** cable connection, 2 m
- **Q** connector, M12 x 1

QC50 – Color sensor

General data

Protection class	IP67	**Connection**	male, M12 x 1
Operating voltage	10…30 VDC	**Switching frequency**	2 kHz
Output	3x ⎽╲⎽, PNP	**Response time**	0.335 ms
Housing material	ABS	**Light type**	white
Range	0…20 mm	**Ambient temperature**	-10…+55 °C
Function	⊐⇄|		

Types and data – selection table

Type	w	d
QC50A3P6XDWQ	w106	d513

w Wiring diagrams on page 658 d Dimension drawing on page 670 Accessories on page 560

R58E – Registration mark sensor

The registration mark sensor R58 Expert detects all common color marks used for product and material registration. To achieve the highest contrast ratio, the sensor automatically selects one of the three integrated color LEDs (red, green, blue) The very short response time of 50 µs is ideally suited for high speed applications. Contrast sensitivity, switching performance and delays are adjusted via integrated pushbuttons or remotely via teach line. Furthermore, the device can be taught to differentiate between ON and OFF state, either statically before commissioning or dynamically during operation.

Features

- Registration mark sensor with tri-color light source
- Excellent color contrast sensitivity, detects 16 greyscales
- Vertical or horizontal light spot, depending on the model
- Light/dark operate, switch ON/OFF delay 30 ms, programmed via push-button or teach line
- Bipolar output PNP/NPN
- Highly visible 8-segment bargraph indicates signal strength, output status and setup.
- Rugged IP67 rated housing

Type code R58

R58	E	CRGB	2	Q

R58 Series

Series

R58	registration mark sensor, rectangular, 30 x 58.9 x 80.1 mm

E Programming

Programming

A	potentiometer
B	teachable
E	teachable

CRGB Scanning

Scanning

CG	1 emitter LED red
CR	1 emitter LED green
CRGB	convergent mode sensor, 3 emitter LEDs red, green, blue

2 Detection field

Detection field

1	parallel detection field relative to the housing axis
2	vertical detection field relative to the housing axis

Q Electrical connection

Electrical connection

blank	cable connection, 2 m
Q	connector, M12 x 1

R58 – Registration mark sensor

General data

Operating voltage	10…30 VDC	**Switching frequency**	10 kHz
Output	⎯⎺⎯, PNP/NPN	**Function**	⊐ ⇄ |
Protection class	IP67	**Connection**	male, M12 x 1
Housing material	ZN	**Ambient temperature**	-10…+55 °C

Types and data – selection table

Type	Light type	w	d
R58ACR1Q8	red	w090	d514
R58ACG1Q8	green	w090	d514
R58ECRGB1Q8	red / green / blue	w102	d514

Many different types available, also with cable, see type code

w Wiring diagrams on page 658 d Dimension drawing on page 670 Accessories on page 560

LT3/LT7 – Laser sensors

The LT3 / LT7 sensor operates on the principle of laser running time technology and is thus extremely efficient: The laser emits one million pulses per second. The microprocessor records the time each pulse needs to travel to the target and back to the sensor. One thousand pulse times are averaged every millisecond and the value is transferred to the output.
The long rangeability of the sensors enables very small parts or less prominent features to be detected, even if the LT sensor is mounted at a safe distance to the hazardous area.
The sensors are available with switching and analog output. Measuring and switching range are easily adjusted via pushbutton. A bright, visible laser spot simplifies the alignment.

Features

- Range adjusted via pushbutton
- Well-priced solution for long-range detection
- Up to 10 m in diffuse mode, up to 250 m in retroreflective mode
- Fast and easy teaching via pushbutton, no potentiometer adjustments
- Switching and analog outputs
- Hysteresis and measuring range are separately adjustable

Type code LT3/LT7

LT3	P	LV	Q

LT3	**Series**	**P**	**Output**	**LV**	**Operating mode**

Series

LT3	laser sensor, runtime, rectangular, 35.3 x 68.5 x 87 mm
LT7	laser sensor, runtime, rectangular, 42 x 93 x 95 mm

Output

BD	PNP/NPN selectable
I	analog output 4…20 mA
N	NPN
P	PNP
U	analog output 0…10 V

Operating mode

LV	retroreflective laser sensor
blank	diffuse mode sensor with LT3
D	diffuse mode sensor with LT7

Q	**Electrical connection**

Electrical connection

blank	cable connection, 2 m
Q with LT3	connector, M12 x 1
Q with LT7	connector, M16

Hans Turck GmbH & Co. KG ▪ Tel. +49 208 49 52-0 ▪ Fax +49 208 49 52-264

LT3 – Laser running time meter

General data

Protection class	IP67	**Connection**	male, M12 x 1
Operating voltage	12…24 VDC	**Housing material**	ABS
Ambient temperature	0…+50 °C		

Types and data – selection table

Type	Output	Light type	Range	Function	w	d
LT3BDQ	2x ⎽◺⎼, PNP/NPN	red, 658 nm, ◬ 2	300…5000 mm	⊐ ⇄ |	w107	d515
LT3PUQ	⎽◺⎼, PNP/analog output, 0…10 V	red, 658 nm, ◬ 2	300…5000 mm	⊐ ⇄ |	w108	d515
LT3PIQ	⎽◺⎼, PNP/analog output, 4…20 mA	red, 658 nm, ◬ 2	300…5000 mm	⊐ ⇄ |	w108	d515
LT3BDLVQ	2x ⎽◺⎼, PNP/NPN	red, 658 nm, ◬ 1	500…50000 mm	⊐ ⇄ ⁞	w107	d515
LT3PULVQ	⎽◺⎼, PNP/analog output, 0…10 V	red, 658 nm, ◬ 1	500…50000 mm	⊐ ⇄ ⁞	w108	d515
LT3PILVQ	⎽◺⎼, PNP/analog output, 4…20 mA	red, 658 nm, ◬ 1	500…50000 mm	⊐ ⇄ ⁞	w108	d515

Many different types available, also with cable, see type code

LT7 – Laser running time meter

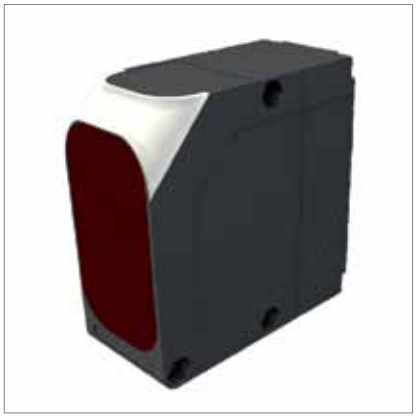

General data

Protection class	IP67	**Connection**	male, M16
Operating voltage	18…30 VDC	**Housing material**	ABS
Light type	IR, 900 nm, ◬ 1	**Ambient temperature**	-10…+50 °C

Types and data – selection table

Type	Output	Range	Function	w	d
LT7PIDQ	2x ⎽◺⎼, PNP/analog output, 4…20 mA	500…10000 mm	⊐ ⇄ |	w109	d516
LT7PLVQ	2x ⎽◺⎼, PNP	500…250000 mm	⊐ ⇄ ⁞	w109	d516

w Wiring diagrams on page 658 d Dimension drawing on page 670 Accessories on page 560

LH series – Laser triangulation

The compact LH laser gauging sensors work according to the principle of optical triangulation. They are a versatile alternative for precision measurement at short to medium distances. Typical fields of application are the control of surface qualities, dimensional accuracy of components and distance, thickness as well as height measurement. Two sensors scan the object from both sides to determine the thickness and synchronize the results. Up to 32 sensors can be combined to a measuring network, able to scan the profile of workpieces at wheel rims for example.

Features

- Compact laser gauging system, working on the principle of optical triangulation, for short to medium distances
- Measuring ranges 25…35 mm, 60…100 mm und 100…200 mm
- Typical applications: hot parts, turned and milled parts, semiconductors, PCBs, shiny or reflective part, soft or sticky parts

Type code LH

LH	30	I	X485	QP

LH Series

Series

LH	laser sensor, triangulation 33 x 80 x 65 mm

30 Range

Range

30	25…35 mm
80	60…100 mm
150	100…200 mm

I Output

Output

I	current output 4…20 mA

X485 Interface

Interface

x485	RS-485 communication

QP Electrical connection

Electrical connection

QP	pigtail, cable connection with connector, M12 x 1

Hans Turck GmbH & Co. KG ▪ Tel. +49 208 49 52-0 ▪ Fax +49 208 49 52-264

LH – Laser triangulation

General data

Protection class	IP67	**Connection**	0.15 m Cable with connector, M12 x 1
Operating voltage	18…30 VDC	**Output**	4 … 20 mA, Analog output, 4…20 mA
Housing material	Al	**Light type**	red, 670 nm, ⚠ 2
Ambient temperature	-10…+45 °C	**Function**	⇄ I
Measuring sequence frequency	4000 Hz		

Types and data – selection table

Type	Range	w	d
LH30IX485QP	25…35 mm	w110	d517
LH80IX485QP	60…100 mm	w110	d517
LH150IX485QP	100…200 mm	w110	d517

Photoelectric sensors

w Wiring diagrams on page 658 d Dimension drawing on page 670 Accessories on page 560

NAMUR sensors MINI-BEAM and Q45

The NAMUR sensors MINI-BEAM and Q45 can be applied in rough industrial applications together with intrinsically safe amplifiers. Conform to the NAMUR standard, light operating sensors are supplied with < 1 mA in dark state and with > 2.1 mA in light state. Available are opposed and retroreflective mode, convergent and diffuse mode sensors and basic devices for fiber optics. NOTE: NAMUR sensors have to be operated via intrinsically safe switching amplifiers in areas exposed to explosion hazards.

Features

- Ex approval acc. to KEMA certificate 03 ATEX 1441 X ignition protection type Ex ia IIC T6
- acc. to EN 60947-5-6: 2000, EN 60079-0: 2006, part 1 and EN 60079-11: 2007 A1…A2
- Sensitivity exactly adjustable via a 15-turn potentiometer
- 2 m connection cable or male M12 x 1

Type code NAMUR-Sensors

MI	AD	9	LVAG	Q

MI Series

Series

Q45	rectangular 44.5 x 87.6 x 56.4 mm
MI	MINI-BEAM, rectangular, 12.3 x 30.7 x 66 mm

AD Output

Output

AD	2-wire, NAMUR sensor

9 Input

Input
voltage supply via isolating switching amplifier

9	5…15 VDC

LVAG Operating mode

Operating mode

CV	convergent mode, visible red light MINI-BEAM, 16 mm, Q45: 38 mm
CV2	convergent mode, visible red light focal distance 43 mm
CV4	convergent mode, visible red light focal distance 100 mm
D	diffuse mode
DL	diffuse mode, long distance
E	opposed mode emitter
F	basic device for glass fibers
FP	basic device for plastic fibers
LP	retroreflective mode polarizing filter

Q Electrical connection

Electrical connection

blank	cable connection, 2 m
Q	connection, M12 x 1

MINI-BEAM – Compact design

General data

Protection class	IP67	**Connection**	male, M12 x 1
Protection type	Ex ia IIC T6	**Operating voltage**	8.2 VDC
Approvals	Ex II 1 G	**Housing material**	PBT
Ambient temperature	-40…+70 °C		

Types and data – selection table

Type	Output	Light type	Range	Function	w	d
MI9EQ	(emitter), NAMUR	IR, 880 nm	0…6000 mm		w111	d518
MIAD9RQ	light operation, NAMUR	–	0…6000 mm		w111	d518
MIAD9LVQ	light operation, NAMUR	red, 650 nm	15…5000 mm		w111	d518
MIAD9LVAGQ	light operation, NAMUR	red, 650 nm	50…2000 mm		w111	d518
MIAD9DQ	light operation, NAMUR	IR, 880 nm	0…380 mm		w111	d518
MIAD9WQ	light operation, NAMUR	IR, 880 nm	0…75 mm		w111	d519
MIAD9CVQ	light operation, NAMUR	red, 650 nm	–		w111	d518
MIAD9CV2Q	light operation, NAMUR	red, 650 nm	–		w111	d518
MIAD9FQ	light operation, NAMUR	IR, 880 nm	–		w111	d520

Many different types available, also with cable, see type code

Q45 – Large design

General data

Protection class	IP67	**Connection**	male, M12 x 1
Protection type	Ex ia IIC T6	**Operating voltage**	8.2 VDC
Approvals	Ex II 1 G	**Housing material**	PBT
Ambient temperature	-40…+70 °C		

Types and data – selection table

Type	Output	Light type	Range	Function	w	d
Q459EQ	(emitter), NAMUR	IR, 880 nm	0…6000 mm		w111	d509
Q45AD9RQ	light operation, NAMUR	–	0…60000 mm		w111	d509
Q45AD9LVQ	light operation, NAMUR	red, 680 nm	80…9000 mm		w111	d509
Q45AD9LPQ	light operation, NAMUR	red, 680 nm	150…6000 mm		w111	d509
Q45AD9DQ	light operation, NAMUR	IR, 880 nm	0…300 mm		w111	d509
Q45AD9DLQ	light operation, NAMUR	IR, 880 nm	0…1070 mm		w111	d509
Q45AD9CVQ	light operation, NAMUR	red, 680 nm	–		w111	d509
Q45AD9CV4Q	light operation, NAMUR	red, 680 nm	–		w111	d509
Q45AD9FQ	light operation, NAMUR	IR, 880 nm	–		w111	d521
Q45AD9FPQ	light operation, NAMUR	red, 660 nm	–		w111	d521

Many different types available, also with cable, see type code

Slot sensors SLM

SLM slot sensors consist of a compact pair of opposed mode sensors incorporated in a U-shaped die-cast metal housing. The sensors are thus well protected and easily mounted; no emitter-receiver alignment. Different designs with 8 slot widths from 10 mm to 220 mm are available for many applications. The sensitivity is adjusted via a single speed potentiometer.

Features

- Compact slot design with integrated opposed mode sensor
- Rugged die-cast metal housing, IP67 rated
- 8 slot widths from 10…220 mm
- PNP, NPN or bipolar output, 1 x NPN and 1 x PNP
- Short response time of 0.5 ms
- Visible red beam
- Light or dark operation selectable via sealed switch.
- 2 m connection cable or male M12 x 1

Type code SLM

SLM	120	P	6	Q

SLM	Series	120	Slot width	P	Output

Series

SLM	slot sensor, 12 x 42 x 80 mm 12 x 62 x 80 mm 12 x 82 x 80 mm 12 x 112 x 80 mm 12 x 152 x 140 mm 12 x 252 x 140 mm

Slot width

120	slot width in mm, 8 sloth widths 10…220 mm

Output

B	PNP/NPN
N	NPN
P	PNP

6	Operating voltage	Q	Electrical connection

Operating voltage

6	10…30 VDC

Electrical connection

blank	cable connection, 2 m
Q	connection, M12 x 1

SLM – Slot sensors

General data

Protection class	IP67	**Connection**	male, M8 x 1
Operating voltage	10…30 VDC	**Output**	__, PNP
Housing material	ZN	**Light type**	red, 680 nm
Ambient temperature	-20…+60 °C	**Function**	

Types and data – selection table

Type	Slot width	w	d
SLM10P6Q	10	w088	d522
SLM20P6Q	20	w088	d523
SLM30P6Q	30	w088	d524
SLM50P6Q	50	w088	d525
SLM80P6Q	80	w088	d526
SLM120P6Q	120	w088	d527
SLM180P6Q	180	w088	d528
SLM220P6Q	220	w088	d529

Many different types available, also with cable, see type code

w Wiring diagrams on page 658 d Dimension drawing on page 670 Accessories on page 560

DF-G1 – Basic device for plastic fibers

Easy setting and configuration, stable performance and various functions are available for a convincing price – The 10 mm slim basic device DF-G1 for optical fibers can be used in many applications – it works reliably in low contrast applications, identifies small parts and controls the position of electronic components. Worth mentioning is also the dual display, indicating the actual and real value simultaneously. It fulfills the demands of many users and has become increasingly successful on the market. The DF-G1 thus takes its place in the ranks of very successful basic devices to which different plastic fibers can be connected.

Features

- Optimized connectivity for optical fibers
- Intuitive user interface with dual display: Simultaneous display of signal level and threshold
- Parts detection in pick-and-place systems
- LWL arrays for parts counting
- Detection of small, low-contrast objects

Type code DF-G1

DF-G1	PS	2M

DF-G1	Series	PS	Output/Function	2M	Electrical connection

Series

DF-G1 basic device for plastic fibers, DIN-rail mounting, dimensions: 10 x 33 x 72 mm

Output/Function

NS 1 x NPN
PS 1 x PNP

Electrical connection

2M cable connection, 2 m
Q7 connector, Ø 8 mm

DF-G1 – Basic device for plastic fibers

General data

Protection class	IP50	**Operating voltage**	10…30 VDC
Switching frequency	10 kHz	**Housing material**	ABS
Light type	red, 660 nm	**Ambient temperature**	-10…+55 °C
Function			

Types and data – selection table

Type	Connection	Output	w	d
DF-G1-NS-2M	2 m cable	, NPN	w112	d530
DF-G1-NS-Q7	male, M8	, NPN	w112	d531
DF-G1-PS-2M	2 m cable	, PNP	w095	d530
DF-G1-PS-Q7	male, M8	, PNP	w095	d531

w Wiring diagrams on page 658 d Dimension drawing on page 670 Accessories on page 560

D10 – For plastic fibers

The D10 and D10 expert series provide user-friendly sensors to connect plastic fibers and suitable for DIN rail mounting. Numerous configuration options and the slim design of only 10 mm make these sensors the perfect choice for demanding application conditions.
The expert series offers static, dynamic and single-point teaching as well as manual fine adjustment, external programming and keylock. A big and well readable display resp. bargraph and LEDs support programming and monitoring.

Features

- High-power sensors for use with plastic fibers
- Very slim (10 mm), for DIN rail mounting
- Standard versions with bipolar switching output (1 x PNP and 1 x NPN)
- Expert version with 2 switching outputs or 1 analog and 1 switching output
- Teachable version with numeric and bargraph display
- Automatic crosstalk protection
- Adjustable switch-off delay
- Status indicated via red or green LED

Type code D10

D10	IP	FP	G	–	Q

D10 Series

Series

D10	basic device for plastic fibers DIN rail mounting 10 x 36 x 61.3 mm

IP Output

Output

IP	expert: analog output 4…20 mA switching output, PNP, teach input numeric display
DP	expert: 2 analog outputs, PNP, teach input numeric display
UP	expert: analog output 0…10 V switching output, PNP, teach input, numeric display
B	switching output,bipolar, bargraph teach input
A	switching output, bipolar, potentiometer

FP Fibers

Fibers

FP	plastic fiber

G Lights

Lights

G	green
blank	red

– Response time

Response time

Y	high-speed (higher switching frequency)
blank	standard

Q Electrical connection

Electrical connection

blank	cable connection, 2 m
Q	connection, M12 x 1

D10 – Switching output

General data

Protection class	IP50	**Connection**	2 m cable
Operating voltage	10…30 VDC	**Output**	_\‾, PNP/NPN
Housing material	ABS	**Ambient temperature**	-10…+55 °C
Function	P		

Types and data – selection table

Type	Switching frequency	Response time	Light type	w	d
D10AFP	1 kHz	0.5 ms	red, 660 nm	w090	d532
D10AFPG	1 kHz	0.5 ms	green, 525 nm	w090	d532
D10AFPY	2.5 kHz	0.2 ms	red, 660 nm	w090	d532
D10AFPGY	2.5 kHz	0.2 ms	green, 525 nm	w090	d532

Many different types available, also with connector, see type code

D10 Expert – Switching output

General data

Protection class	IP50	**Connection**	2 m cable
Operating voltage	10…30 VDC	**Switching frequency**	2.5 kHz
Output	_\‾, PNP/NPN	**Housing material**	ABS
Ambient temperature	-10…+55 °C	**Function**	P

Types and data – selection table

Type	Light type	w	d
D10BFP	red, 660 nm	w113	d533
D10BFPG	green, 525 nm	w113	d533

Many different types available, also with connector, see type code

w Wiring diagrams on page 658 d Dimension drawing on page 670 Accessories on page 560

D10 Expert – Dual switching output

General data

Protection class	IP50	**Connection**	2 m cable
Operating voltage	12…24 VDC	**Switching frequency**	10 kHz
Housing material	ABS	**Ambient temperature**	-20…+55 °C
Function			

Types and data – selection table

Type	Output	Light type	w	d
D10DNFP	2x, NPN	red, 680 nm	w114	d534
D10DPFP	2x, PNP	red, 680 nm	w115	d534
D10DNFPG	2x, NPN	green, 525 nm	w114	d534
D10DPFPG	2x, PNP	green, 525 nm	w115	d534

Many different types available, also with connector, see type code

D10 Expert – Current output

General data

Protection class	IP50	**Connection**	2 m cable
Operating voltage	12…24 VDC	**Switching frequency**	10 kHz
Housing material	ABS	**Ambient temperature**	-20…+55 °C
Function			

Types and data – selection table

Type	Output	Light type	w	d
D10INFP	, NPN, 4…20 mA	red, 680 nm	w116	d534
D10IPFP	, PNP, 4…20 mA	red, 680 nm	w116	d534
D10INFPG	, NPN, 4…20 mA	green, 525 nm	w116	d534
D10IPFPG	, PNP, 4…20 mA	green, 525 nm	w116	d534

Many different types available, also with connector, see type code

D10 Expert – Voltage output

General data

Protection class	IP50	**Connection**	2 m cable
Operating voltage	15…24 VDC	**Switching frequency**	10 kHz
Housing material	ABS	**Ambient temperature**	-20…+55 °C
Function			

Types and data – selection table

Type	Output	Light type	w	d
D10UNFP	_⟍_, NPN, 0…10 V	red, 680 nm	w116	d534
D10UPFP	_⟍_, PNP, 0…10 V	red, 680 nm	w116	d534
D10UNFPG	_⟍_, NPN, 0…10 V	green, 525 nm	w116	d534
D10UPFPG	_⟍_, PNP, 0…10 V	green, 525 nm	w116	d534

Many different types available, also with connector, see type code

w Wiring diagrams on page 658 d Dimension drawing on page 670 Accessories on page 560

QS18 – Basic device for glass and plastic fibers

The compact QS18 fit in almost any place. Equipped with standard bores and optionally available with M18 thread, they can be used to replace M18 threaded barrels as well as rectangular shaped sensors without thread. The QS18 is available as basic device for plastic or glass fibers and achieves an optical power which exceeds by far the usual performance of sensors of this size.

Features

- Universal rectangular design, many mounting options
- Connection of plastic and glass fibers
- Response time < 1ms
- Rugged, fully encapsulated plastic housing, protective circuit
- Protection class IP67
- Bright, all-round visible LEDs
- 2 m connection cable, male M12 x 1 and cable with male end M12 x 1

Type code QS18…F

QS18	V	P	6	FP	Q

QS18	Series	A	P	Output	6	Operating voltage

Series

QS18	rectangular, fiber optic sensor, 15 x 35 x 27.5 mm 15 x 35 x 36.9 mm 15 x 49 x 27.5 mm 15 x 49 x 36.9 mm

Output

N	NPN
P	PNP

Output function

V	NO/NC

Operating voltage

6	10…30 VDC max. 25 mA

FP	Fibers	Q	Electrical connection

Fibers

FP	plastic fiber
F	glass fiber M18 thread

Electrical connection

blank	cable connection, 2 m
Q	connection, M12 x 1

QS18F – Basic device for glass fibers

General data

Protection class	IP67	**Operating voltage**	10…30 VDC
Housing material	ABS	**Light type**	IR, 940 nm
Ambient temperature	-20…+70 °C	**Function**	G

Types and data – selection table

Type	Connection	Output	w	d
QS18VN6F	2 m cable	__/⊥_, NPN, 100 mA	w117	d535
QS18VP6F	2 m cable	__/⊥_, PNP, 100 mA	w091	d535
QS18VN6FQ8	male, M12 x 1	__/⊥_, NPN, 100 mA	w117	d536
QS18VP6FQ8	male, M12 x 1	__/⊥_, PNP, 100 mA	w091	d536

QS18FP – Basic device for plastic fibers

General data

Protection class	IP67	**Operating voltage**	10…30 VDC
Housing material	ABS	**Light type**	red, 660 nm
Ambient temperature	-20…+70 °C	**Function**	P

Types and data – selection table

Type	Connection	Output	w	d
QS18VN6FP	2 m cable	__/⊥_, NPN, 100 mA	w117	d537
QS18VP6FP	2 m cable	__/⊥_, PNP, 100 mA	w091	d537
QS18VN6FPQ8	male, M12 x 1	__/⊥_, NPN, 100 mA	w117	d538
QS18VP6FPQ8	male, M12 x 1	__/⊥_, PNP, 100 mA	w091	d538

w Wiring diagrams on page 658 d Dimension drawing on page 670 Accessories on page 560

FI22 – Basic device for plastic fibers

The plastic fiber sensor FI22 operates reliably even in low-contrast applications. Setup mode with static, dynamic and single-point teaching as well as manual fine adjustment, external programming and keylock are only some of many functions that can be programmed. A large, well readable bargraph and bright LEDs support programming and monitoring during operation. Owing to its compact design, the sensor can be mounted almost anywhere. It is simply snapped on with the bracket which is included in the delivery. The housing is IP67 protected, allowing the sensor to be applied in polluted ambients.

Features

- Compact plastic fiber sensor
- Protection class IP67
- 8-segment LED bargraph indicates the relative signal strength at the input, the contrast, the programming and alarm status.
- Automatic teach modes, including static, dynamic, and single-point programming as well as manual fine adjustment.
- PNP or NPN outputs
- Programmable 30 ms pulse expansion (switch-off delay)
- Programmed via two buttons or remotely via cable
- Visible red light

Type code Fi22

Fi22 FP Q

Fi22	Series	FP	Fibers	Q	Electrical connection

Series

Fi22	basic device for plastic fibers LED bargraph, teach input 23 x 14.5 x 50 mm

Fibers

FP	plastic fiber

Electrical connection

Q	connector, Ø 8 mm
blank	cable connector, 2 m

Hans Turck GmbH & Co. KG ▪ Tel. +49 208 49 52-0 ▪ Fax +49 208 49 52-264

FI22 – Basic device for plastic fibers

General data

Protection class	IP67	**Operating voltage**	10…30 VDC
Output	_\‾‾_, PNP/NPN	**Housing material**	ABS
Light type	red, 660 nm	**Ambient temperature**	-10…+55 °C
Function	P		

Types and data – selection table

Type	Connection	w	d
FI22FP	2 m cable	w113	d539
FI22FPQ	male, Ø 8 mm	w113	d540

w Wiring diagrams on page 658 d Dimension drawing on page 670 Accessories on page 560

R55F – Base unit for optical fibers

The R55F detects 16 greyscales reliably at up to 10,000 actuations per second. The devices with green light emitting LED are suitable for most color mark applications. Blue light is ideally suited for the detection of yellow tones. For example, 20% of yellow on newspaper is detected with it. Blue and green tones are detected with red light. White light is used for special applications. ON and OFF conditions are individually defined in the static teach mode. In dynamic teach mode the light and dark conditions are automatically taught during operation and the switching threshold is continuously updated while the sensor is working. During commissioning and operation a good visible green LED chain indicates continuously the contrast quality and the switchpoint.

Features

- Contrast sensor for color mark detection, for plastic and glass fibers
- Installed with bracket or on a 35 mm DIN rail
- Devices with green, blue, red and white light
- Static or dynamic teaching
- Adjustments: Light/dark operation, switch-off delay
- 4 LEDs for indication of light/dark operation, switching status and switch-off delay.
- Bipolar outputs NPN/PNP

Type code R55F

R55F V W Q

R55F Series

Series
R55F color mark sensor 30 x 25 x 85.4 mm
F connection for glass plastic fiber

V Fibers

Fibers
P plastic fiber
V glass fiber

W Lights

Lighs
B blue
G green
W white
blank red

Q Electrical connection

Electrical connection
blank cable connection, 2 m
Q connection, M12 x 1

Hans Turck GmbH & Co. KG ▪ Tel. +49 208 49 52-0 ▪ Fax +49 208 49 52-264

R55F – Base unit for optical fibers

General data

Protection class	IP67	**Operating voltage**	10…30 VDC
Switching frequency	10 kHz	**Output**	⎯⎺⎺⎯, PNP/NPN
Housing material	polycarbonate/ABS	**Ambient temperature**	-10…+55 °C
Connection	male, M12 x 1		

Types and data – selection table

Type	Light type	Function	w	d
R55FQ	IR, 880 nm	G	w102	d541
R55FVQ	red, 650 nm	G	w102	d541
R55FVGQ	green, 525 nm	G	w102	d541
R55FVBQ	blue, 475 nm	G	w102	d541
R55FVWQ	white	G	w102	d541
R55FPGQ	green, 525 nm	P	w102	d541
R55FPBQ	blue, 475 nm	P	w102	d541
R55FPWQ	white	P	w102	d541

Many different types available, also with cable, see type code

w Wiring diagrams on page 658 d Dimension drawing on page 670 Accessories on page 560

Pick-to-Light sensors K50

The Pick-to-Light K50 are mounted to the bins. Integrated job lights indicate the pickup order of components. If the operator takes a component from a box, the sensor detects the operator's hand and sends a corresponding signal to the control unit. The control unit checks if the right component and the right amount has been removed from the box. If so, the job light of the box turns off and the job light of the next box turns on. Alarm and other signals can be programmed to indicate mispick.

Features

- Sensors with integrated job light for removal control and bin-picking applications
- Compact design with sensor and integrated job light
- Job lights available in different colors
- Versions with pushbutton and passive triggering to confirm the removal
- NPN or PNP output
- Fully encapsulated IP67 rated design, suited for rough environments
- Protection against ambient light, immune to electromagnetic and high-frequency interferences

Type code K50

K50	R	P	LP	GR	E	QP

K50 Series

Series

K50	pick to light, Ø 50 mm, height: 37.3 mm, thread M30 x 1

R Output function

Output function

A	light operation
R	dark operation

P Output

Output

P	PNP
N	NPN

LP Operating mode

Operating mode

LP	retroreflective mode polarizing filter
FF50	diffuse mode, fixed field 50 mm
PB	pushbutton

GR Colors

Colors

G	green
R	red
X	single-color

E Color signals

Color signals

C	request green - pick up red - picking error red
D	request green - pick up green - picking error OFF
E	request green - pick up green - picking error red

QP Electrical connection

Electrical connection

blank	cable connection, 2 m
Q	connector, M12 x 1
QP	cable connection with connector, M12 x 1

Hans Turck GmbH & Co. KG ▪ Tel. +49 208 49 52-0 ▪ Fax +49 208 49 52-264

K50 - Beacon for picking processes

General data

Protection class	IP67	**Connection**	male, M12, M12 x 1
Operating voltage	12…30 VDC	**Output**	⎯⎺, PNP
Response time	3 ms	**Housing material**	PC
Ambient temperature	-40…+50 °C	**Window material**	Acrylic

Types and data – selection table

Type	Light type	Range	Function	w	d
K50APFF50GRCQ	IR, 880 nm	0...50 mm		w118	d542
K50APFF50GXDQ	IR, 880 nm	0...50 mm		w118	d542
K50APFF100GRCQ	IR, 880 nm	0...100 mm		w118	d542
K50APFF100GYCQ	IR, 880 nm	0...100 mm		w118	d542
K50APFF100GXDQ	IR, 880 nm	0...100 mm		w118	d542
K50APFF100GREQ	IR, 880 nm	0...100 mm		w118	d542
K50APLPGRCQ	red, 680 nm	0...2000 mm		w118	d542
K50APLPGXDQ	red, 680 nm	0...2000 mm		w118	d542
K50APLPGREQ	red, 680 nm	0...2000 mm		w118	d542

Many different types available, also with cable with connector, see type code

w Wiring diagrams on page 658 d Dimension drawing on page 670 Accessories on page 560

Job sequencing PVA/PVD/PVL

PVA, PVD and PVL light screens are used for job sequencing and monitoring of bin-picking processes. Clearly visible job lights on each emitter and receiver guide the operators at the assembly lines through the parts assembly sequence. Failures such as missing or wrongly mounted parts are reduced to a minimum. The following settings can be adjusted via DIP switch: PNP/NPN output, NO/NC output, steady/flashing job light, gate polarity for activation of job light. LEDs indicate setup and system failures.

Features

- PVA: Opposed mode sensor, 2 m range; emitter and receiver with integrated job light; asynchronous emitter and receiver
- PVD: One-piece, compact sensor; automatic selection of diffuse or retroreflective mode; max. 2 m range with reflector; max. 400 mm in diffuse mode.
- PVL: One-piece, compact sensor, retroreflective mode, max. range 1.5 m.
- Protective mounting brackets are available.

Type code PVA, PVD, PVL

PVA	225	P	6	E	Q

PVA	Series	225	Monitored field	P	Output

Series

PVA	Lights screen for pick-and-place assembly, 2-part, emitter, receiver
PVD	Lights screen for pick-and-place assembly, 1-part, adjustable, retroreflective laser sensor on reflector or diffuse mode sensor
PVL	Lights screen for pick-and-place assembly, 1-part, retroreflective laser sensor on reflector

Monitored field

225	monitored field in mm

Output (PVA)

P	PNP
N	NPN

6	Operating voltage	E	Operating mode	Q	Electrical connection

Operating voltage

6	10…30 VDC

Operating mode (PVA)

E	emitter
R	receiver
blank	pair (emitter & receiver)

Electrical connection

blank	cable connection, 2 m
Q	pigtail with connector, M12 x 1

PVA/PVD/PVL – Light screens for picking processes

General data

Operating voltage	12…30 VDC	**Housing material**	Al

Types and data – selection table

Type	Protection class	Connection	Output	Detection zone height	Response time	Light type	Range	Ambient temperature	Function	w	d
PVA100P6Q	IP62	2 m Cable with connector, M12 x 1	PNP	100 mm	–	IR, 880 nm	0…2000 mm	0…+50 °C		w119	d543
PVA225P6Q	IP62	2 m Cable with connector, M12 x 1	PNP	225 mm	–	IR, 880 nm	0…2000 mm	0…+50 °C		w119	d543
PVA300P6Q	IP62	2 m Cable with connector, M12 x 1	PNP	300 mm	–	IR, 880 nm	0…2000 mm	0…+50 °C		w119	d543
PVA375P6Q	IP62	2 m Cable with connector, M12 x 1	PNP	375 mm	–	IR, 880 nm	0…2000 mm	0…+50 °C		w119	d543
PVD100Q	IP62	Cable with connector, M12 x 1	PNP/NPN	111 mm	–	red, 630 nm	0…2000 mm	0…+50 °C		w120	d544
PVD225Q	IP62	Cable with connector, M12 x 1	PNP/NPN	240 mm	–	red, 630 nm	0…2000 mm	0…+50 °C		w120	d545
PVL225PQ	IP65	2 m Cable with connector, M12 x 1	PNP	280 mm	2 ms	red, 630 nm	0…1500 mm	-40…+70 °C		w118	d546

Many different types available, also with cable, see type code

w Wiring diagrams on page 658 d Dimension drawing on page 670 Accessories on page 560

Switching light screen LX

The LX switching light screen detects very small but also extremely flat objects, for example a sheet of paper or an envelope. Typical applications are counting tasks or parcel handling on conveyor belts. The two-piece system consists of an emitter and a receiver identical in size and range.
The distance between emitter and receiver can be up to 75 mm for short-range and 200 mm for long-range applications. Sensors for standard ranges can be mounted at distance of 200 mm to 2000 mm from each other. High reliability and precision is achieved through a 5 ms switch-off delay.

Features

- Switching light screen
- Multiple-beam infrared pattern
- Detects small and extremely flat objects of 5.6 or 9.5 mm
- Available in different sizes 113, 189, 342 mm
- Sensing ranges from 75 mm to 2 m
- Response time in 0.8 to 3.2 ms
- Simple wiring, synchronizing line is not required
- NPN and PNP transistor outputs
- Rugged IP67 rated housing
- Temperature range: -20…+70 °C

Type code LX

LX	12	R	SR	Q

LX	Series	12	Monitored field	R	Sensor type

Series

LX	switching light screen, height: 31.8 mm, depth: 25.4 mm, other heights: LX3 = 113.4 mm LX6 = 189.6 mm LX9 = 265.8 mm LX12 = 342.0 mm LX15 = 418.2 mm LX18 = 494.4 mm LX21 = 570.6 mm LX24 = 646.8 mm

Monitored field

3	field height 67 mm
6	field height 143 mm
9	field height 218 mm
12	field height 295 mm
15	field height 371 mm
18	field height 447 mm
21	field height 523 mm
24	field height 599 mm

Sensor type

R	receiver
E	emitter

SR	Resolution	Q	Electrical connection

Resolution

SR	minimum object size, 5.6 mm
blank	minimum object size, 9.5 mm

Electrical connection

Q	pigtail with connector, M12 x 1
blank	cable connection, 2 m

LX – Light screen for parts detection

General data

Protection class	IP65	**Connection**	0.15 m Cable with connector, M12 x 1
Operating voltage	10…30 VDC	**Housing material**	Al, grey
Range	150…2000 mm	**Ambient temperature**	-20…+70 °C
Function	switching light screen		

Types and data – selection table

Type	Output	Detection zone height	Response time	Light type	w	d
LX3EQ	–	67 mm	–	IR, 880 nm	w121	d547
LX3RQ	_⟋_, PNP/NPN, 125 mA	67 mm	0.8 ms	–	w122	d547
LX6EQ	–	143 mm	–	IR, 880 nm	w121	d547
LX6RQ	_⟋_, PNP/NPN, 125 mA	143 mm	1.6 ms	–	w122	d547
LX9EQ	–	218 mm	–	IR, 880 nm	w121	d547
LX9RQ	_⟋_, PNP/NPN, 125 mA	218 mm	2.4 ms	–	w122	d547
LX12EQ	–	295 mm	–	IR, 880 nm	w121	d547
LX12RQ	_⟋_, PNP/NPN, 125 mA	295 mm	3.2 ms	–	w122	d547
LX15EQ	–	371 mm	–	IR, 880 nm	w121	d547
LX15RQ	_⟋_, PNP/NPN, 125 mA	371 mm	4 ms	–	w122	d547
LX18EQ	–	447 mm	–	IR, 880 nm	w121	d547
LX18RQ	_⟋_, PNP/NPN, 125 mA	447 mm	4.8 ms	–	w122	d547
LX21EQ	–	523 mm	–	IR, 880 nm	w121	d547
LX21RQ	_⟋_, PNP/NPN, 125 mA	523 mm	5.6 ms	–	w122	d547
LX24EQ	–	599 mm	–	IR, 880 nm	w121	d547
LX24RQ	_⟋_, PNP/NPN, 125 mA	599 mm	6.4 ms	–	w122	d547

Many different types available, also with cable, see type code

w Wiring diagrams on page 658 d Dimension drawing on page 670 Accessories on page 560

EZ-ARRAY – Measuring light screen

The measuring light screen EZ-ARRAY™ is ideal for hole sizing, product sizing and profiling, edge and center guiding, loop tension control and parts counting. The controller functionality is integrated in the receiver and can be configured via 6 DIP switches. Status and alignment of emitter and receiver are indicated by a 3-digit display and LED bargraph. The light screen can be configured alternatively via RS485 interface at the receiver (software included in delivery).
The EZ-ARRAY™ can be adjusted to almost any application with a resolution limit above 5 mm. The functionality comprises first, last or middle beam blocked, number of beams blocked, invert and blanking.

Features

- Measuring light screen with multiple operating modes
- Adjustable resolution 5 mm and higher
- Range up to 4 m
- Two-piece device, evaluation functionality integrated in receiver
- Configuration via DIP switch or software
- Serial interface RS485 Modbus-RTU
- Two switching outputs (PNP or NPN) and two analog outputs (0 … 10 V or 4 … 20 mA)
- Display and LED bargraph for status indication
- Temperature range -40 …+70 °C
- Protection class IP65

Type code EZ-Array - Measuring light screens

EA5	R	1500	P	I	XMOD	Q

EA5 Series

Series

EA5	measuring light screen, width: 36 mm, depth: 46.2 mm other heights: EA5.150 mm EA5.300 mm EA5.450 mm EA5.600 mm EA5.750 mm EA5.900 mm EA5.1050 mm EA5.1200 mm EA5.1500 mm EA5.1800 mm EA5.2100 mm EA5.2400 mm

R Operating mode

Operating mode

R	receiver
E	emitter

1500 Field range

Field range

1500	range in mm

P Switching output (2 x)

Switching output (2 x)

P	PNP (2 x)
N	NPN (2 x)

I Analog output (2 x)

Analog output (2 x)

I	4…20 mA (2 x)
U	0…10 VDC (2 x)

XMOD

XMOD	serial interface RS485 (Modbus RTU) via M12 x 1 connector (only on emitter)

Q Electrical connection

Electrical connection

Q	connector, M12 x 1, 8-pole

EZ-ARRAY™ – Measuring light screen

General data

Protection class	IP65	**Connection**	male, M12 x 1
Operating voltage	12…30 VDC	**Housing material**	Al, anodized
Range	400…4000 mm	**Ambient temperature**	-40…+70 °C

Types and data – selection table

Type	Output	Detection zone height	Response time	Light type	Function	w	d
EA5E150Q	–	150 mm	–	IR		w123	d548
EA5R150PIXMODQ	2 x ⎽╲⎽, PNP/analog output, 4…20 mA	150 mm	2.8 ms	–		w124	d549
EA5E300Q	–	300 mm	–	IR		w123	d548
EA5R300PIXMODQ	2 x ⎽╲⎽, PNP/analog output, 4…20 mA	300 mm	5 ms	–		w124	d549
EA5E450Q	–	450 mm	–	IR		w123	d548
EA5R450PIXMODQ	2 x ⎽╲⎽, PNP/analog output, 4…20 mA	450 mm	7.1 ms	–		w124	d549
EA5E600Q	–	600 mm	–	IR		w123	d548
EA5R600PIXMODQ	2 x ⎽╲⎽, PNP/analog output, 4…20 mA	600 mm	9.3 ms	–		w124	d549
EA5E750Q	–	750 mm	–	IR		w123	d548
EA5R750PIXMODQ	2 x ⎽╲⎽, PNP/analog output, 4…20 mA	750 mm	11.4 ms	–		w124	d549
EA5E900Q	–	900 mm	–	IR		w123	d548
EA5R900PIXMODQ	2 x ⎽╲⎽, PNP/analog output, 4…20 mA	900 mm	13.6 ms	–		w124	d549
EA5E1050Q	–	1050 mm	–	IR		w123	d548
EA5R1050PIXMODQ	2 x ⎽╲⎽, PNP/analog output, 4…20 mA	1050 mm	15.7 ms	–		w124	d549
EA5E1200Q	–	1200 mm	–	IR		w123	d548
EA5R1200PIXMODQ	2 x ⎽╲⎽, PNP/analog output, 4…20 mA	1200 mm	17.9 ms	–		w124	d549
EA5E1500Q	–	1500 mm	–	IR		w123	d548
EA5R1500PIXMODQ	2 x ⎽╲⎽, PNP/analog output, 4…20 mA	1500 mm	22.2 ms	–		w124	d549
EA5E1800Q	–	1800 mm	–	IR		w123	d548
EA5R1800PIXMODQ	2 x ⎽╲⎽, PNP/analog output, 4…20 mA	1800 mm	26.5 ms	–		w124	d549
EA5E2100Q	–	2100 mm	–	IR		w123	d548
EA5R2100PIXMODQ	2 x ⎽╲⎽, PNP/analog output, 4…20 mA	2100 mm	30.8 ms	–		w124	d549
EA5E2400Q	–	2400 mm	–	IR		w123	d548
EA5R2400PIXMODQ	2 x ⎽╲⎽, PNP/analog output, 4…20 mA	2400 mm	35.1 ms	–		w124	d549

Many different types available, also with voltage output, see type code

w Wiring diagrams on page 658 d Dimension drawing on page 670 Accessories on page 560

Vision sensor iVu

The iVu-series offers a selection of compact vision sensors for camera-based inspection and identification tasks. The sensors are easy to handle thanks to the intuitive menu guidance. In terms of capability, they work highly precise, just like complex camera systems – a PC is not required to make adjustments. The product portfolio comprises types with integrated lens and light, types with integrated lens and without light, as well as types for C-mount lenses with enlarged focal length. Lenses and light have to be ordered separately.
The iVu-TG sensors accomplish control tasks such as presence monitoring of objects or compare objects to a reference piece or a parameter. They also do pass/fail inspections (detection and counting). The iVu-TB barcode reader scans matrix barcodes (DataMatrix, QR-Code) as well as linear barcodes (Code 128, Code 39, CODABAR, Interleaved 2 of 5, EAN13, EAN8, UPCE, Postnet, IMB, Pharmacode).

Features

- Compact image processing solution
- Camera with CMOS image processor (resolution 752 x 480)
- 68.5 mm touch screen, LCD display
- Rugged IP67 housing with integrated light
- External triggering input, remote teach input, external flash output
- USB port for upload/download of device settings, inspection files or software updates

Type code Vision sensors iVu

IVU	TG	P	X	08

IVU Series
- Vision-Sensor iVu

TG Design

TG	vision sensor with integrated touch screen
RG	vision sensor for remote display
TB	barcode reader with integrated touch screen
RB	barcode reader for remote display

P Output

P	PNP
N	NPN

X LED color

X	no color
R	red
G	green
B	blue
W	white
I	infrared
6	ultraviolet (365 nm)
9	ultraviolet (395 nm)

08 Lens

04	4.3 mm
06	6 mm
08	8 mm
12	12 mm
16	16 mm
25	25 mm
C	C-mount

iVu TG – Vision sensor with integrated touch screen

General data

Protection class	IP67	**Connection**	male, M12 x 1
Operating voltage	10…30 VDC	**Output**	⎯⎺⎽, PNP, 150 mA
Housing material	PBT	**Ambient temperature**	0…+50 °C
Function	area, blemish, match	**Window material**	Acrylic

Types and data – selection table

Type	Light type	Range	w	d
IVUTGPI08	IR	8 mm	w125	d550
IVUTGPI12	IR	12 mm	w125	d550
IVUTGPI16	IR	16 mm	w125	d550
IVUTGPR08	red	8 mm	w125	d550
IVUTGPR12	red	12 mm	w125	d550
IVUTGPR16	red	16 mm	w125	d550
IVUTGPW08	white	8 mm	w125	d550
IVUTGPW12	white	12 mm	w125	d550
IVUTGPW16	white	16 mm	w125	d550
IVUTGPXC	–	C-Mount	w125	d551

Many different types available, also with other focus and / or integrated lighting, see type code

iVu BCR – Barcode reader with integrated touch screen

General data

Protection class	IP67	**Connection**	male, M12 x 1
Operating voltage	10…30 VDC	**Output**	⎯⎺⎽, PNP, 150 mA
Housing material	PBT	**Ambient temperature**	0…+50 °C
Function	BCR	**Window material**	Acrylic

Types and data – selection table

Type	Light type	Range	w	d
IVUTBPI08	IR	8 mm	w126	d550
IVUTBPR08	red	8 mm	w126	d550
IVUTBPW08	white	8 mm	w126	d550
IVUTBPXC	–	C-Mount	w126	d551

Many different types available, also with other focus and / or integrated lighting, see type code

w Wiring diagrams on page 658 d Dimension drawing on page 670 Accessories on page 560

Vision sensor iVu Plus with Ethernet communication

The iVu-Plus series offers a selection of compact vision sensors for camera-based inspection and identification tasks. The sensors are easy to handle thanks to the intuitive menu guidance. In terms of capability, they work highly precise, just like complex camera systems – a PC is not required to make adjustments. The product portfolio comprises types with integrated lens and light, types with integrated lens and without light, as well as types for C-mount lenses with enlarged focal length. Lenses and light have to be ordered separately.
The iVu-TG sensors accomplish control tasks such as presence monitoring of objects or compare objects to a reference piece or a parameter; they also do pass/fail inspections (detection and counting). The iVu-TB barcode reader scans matrix barcodes (DataMatrix, QR-Code) as well as linear barcodes (Code 128, Code 39, CODABAR, Interleaved 2 of 5, EAN13, EAN8, UPCE, Postnet, IMB, Pharmacode).

Features

- Compact image processing solution
- Camera with CMOS image processor (resolution 752 x 480)
- 68.5 mm touch screen, LCD display
- Rugged IP67 housing with integrated light
- Memory for 30 inspections
- External triggering input, remote teach input, external flash output
- USB port for upload/download of device settings, inspection files or software updates
- Serial communication interface RS232
- Ethernet communication

Type code Vision sensors iVu Plus

IVUP	TG	X	08

IVUP	Series	TG	Design	X	LED color

Vision-Sensor iVu Plus
with Ethernet communication

Design

TG	vision sensor with integrated touch screen
RG	vision sensor for remote display
TB	barcode reader with integrated touch screen
RB	barcode reader for remote display

LED color

X	no color
R	red
G	green
B	blue
W	white
I	infrared
6	ultraviolet (365 nm)
9	ultraviolet (395 nm)

08	Lens

Diameter in mm

04	4.3 mm
06	6 mm
08	8 mm
12	12 mm
16	16 mm
25	25 mm
C	C-mount

iVu Plus TG – Vision sensor with integrated touch screen

General data

Protection class	IP67	**Connection**	male, M12 x 1
Operating voltage	10…30 VDC	**Output**	programmable, PNP/ NPN, 150 mA
Housing material	PBT	**Ambient temperature**	0…+50 °C
Function	area, blemish, match, sort	**Window material**	Acrylic

Types and data – selection table

Type	Light type	Range	w	d
IVUPTGI08	IR	8 mm	w126	d552
IVUPTGI12	IR	12 mm	w126	d552
IVUPTGI16	IR	16 mm	w126	d552
IVUPTGR08	red	8 mm	w126	d552
IVUPTGR12	red	12 mm	w126	d552
IVUPTGR16	red	16 mm	w126	d552
IVUPTGW08	white	8 mm	w126	d552
IVUPTGW12	white	12 mm	w126	d552
IVUPTGW16	white	16 mm	w126	d552
IVUPTGXC	–	C-Mount	w126	d551

Many different types available, also with other focus and / or integrated lighting, see type code

iVu Plus BCR – Barcode reader with integrated touch screen

General data

Protection class	IP67	**Connection**	male, M12 x 1
Operating voltage	10…30 VDC	**Output**	programmable, PNP/ NPN, 150 mA
Housing material	PBT	**Ambient temperature**	0…+50 °C
Function	BCR	**Window material**	Acrylic

Types and data – selection table

Type	Light type	Range	w	d
IVUPTBI08	IR	8 mm	w126	d552
IVUPTBR08	red	8 mm	w126	d552
IVUPTBW08	white	8 mm	w126	d552
IVUPTBXC	–	C-Mount	w126	d551

Many different types available, also with other focus and / or integrated lighting, see type code

w Wiring diagrams on page 658 d Dimension drawing on page 670 Accessories on page 560

Ultrasonic sensors

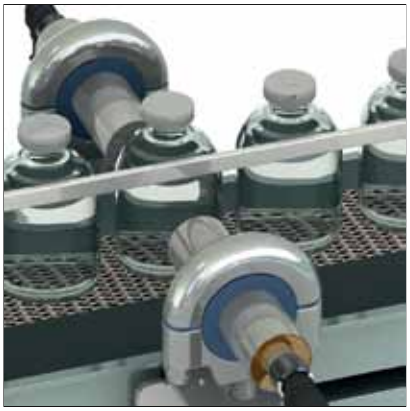

Ultrasonic sensing – Versatile solutions for many applications

Ultrasonic sensors detect a multitude of objects contactless and wear-free with ultrasonic waves. In contrast to other sensing technologies, it is not important whether the object is transparent or opaque, metallic or non-metallic, firm, liquid or powdery. More important is the object's surface. The smoother the surface, the better the reflectivity and the larger the range.
The application possibilities for ultrasonic sensors are nearly infinite. Whether level or height detection, measurement of distance or object counting, ultrasonic sensors detect objects of different material qualities and at long distances. Environmental conditions such as spray, dust or rain hardly affect their functionality.
Ultrasonic diffuse mode sensors detect all objects that echo back ultrasonic waves. For this purpose the sensor emits ultrasonic pulses in cyclic periods. The echo is reverberated and transformed into an electrical signal via the sensor's transducer surface. The distance between the sensor and object is determined through the echo propagation principle, whereby the period between pulse emission and reverberation is related to a given sonic speed.
Ultrasonic sensors are also available as opposed and retroreflective mode devices. In opposed mode, ultrasonic waves are continuously propagating between emitter and receiver. If an object crosses the wave, reverberation is cut off and the sensor produces a switching signal.
TURCK's ultrasonic sensors are available in many different designs, measuring ranges, cone angles and output types. Most of them feature temperature compensation, noise suppression and a connection cable for autosynchronization (protection against crosstalk).
Sensors with two switching outputs are suited for the control of minimum and maximum filling levels for example. Analog sensors are available with current and voltage output. Sensors with external transducer are best suited for confined spaces.
Ultrasonic sensors with a cone angle of 6° detect small objects with pinpoint accuracy. Devices with cone angles of 12° to 15° are also available. Sensors with a cone angle of 60° are best suited for monitoring very large areas. They detect smooth and even surfaces easily and are insensitive to tilt.

Our strengths – Your advantages

Broad product range - Different designs and cone angles

TURCK ultrasonic sensors are available as metal threaded barrels M18/M30 or plastic rectangular Q30 devices with a narrow cone angle of about 6°. They detect very small objects with pinpoint accuracy. Through focussing energy, ranges of up to 8 m can be achieved. Q45U and T30U have far greater cone angles of 12° to 15°. The cone angle of the CP40 rectangular types is 60°. They are best suited to monitor large areas and are insensitive to tilt when detecting objects with smooth and even surfaces. The right choice for confined spaces is the Q45U with external transducer.

Highly efficient - High accuracy at any given range

The ranges achieved by ultrasonic sensors depend on the wavelength respectively the frequency used. The greater the wavelength or lower the frequency, the larger the range. Compact sensors achieve ranges from 300 mm to 500 mm. 8 m and more are possible with wavelengths of 5 mm. The accuracy of ultrasonic sensing is not only limited by the wavelength but also by the fluctuation of sonic speed caused by temperature changes. Therefore most of the sensors are equipped with temperature compensation. This enables analog sensors to achieve resolutions of up to 0.6 mm over a wide temperature range.

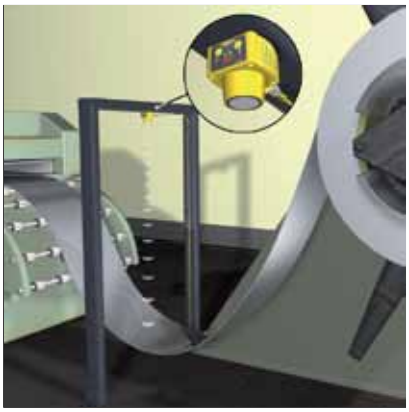

Protection against interferences – Noise suppression and synchronization

Signal processing is not influenced by metallic clink or compressed air hissing. Such unwanted ambient noises are filtered out through an optimally selected frequency range and a patented noise suppression circuit. Crosstalk between ultrasonic sensors is inhibited through multiplexing or synchronization. Most sensors synchronize automatically after connecting the cable. For this purpose they emit ultrasonic pulses synchronously, behaving like one single sensor with extended sonic cone, provided they are accordingly arranged. You find this technology applied in electronic parking assistants of cars.

Hans Turck GmbH & Co. KG ▪ Tel. +49 208 49 52-0 ▪ Fax +49 208 49 52-264

Your advantages

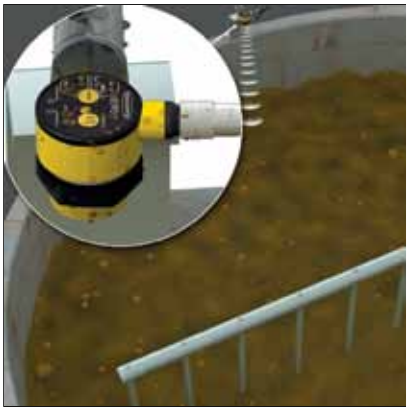

T30UX – Accurately measured values and minimal influence of temperature

Thanks to a powerful transducer and temperature compensation, the T30UX provide very accurately measured values. The diffuse mode types achieve ranges of even 3 m with blind zones reduced to 10 % of full scale. Thanks to the integrated temperature compensation, failure rates are reduced by approx. 90 %. The temperature window of -40…+70 °C remains stable with a slight drift of only 2.2 %. The IP67 rated sensors are applied in different industrial sectors such as the automotive industry (detection of glass), paper manufacturing (sag control), pharmaceuticals production (level control) and many other fields.

M25U – All-metal ultrasonic sensors for aseptic applications

The M25U are fully encapsulated in stainless steel and are IP68/IP69K rated. They meet all requirements on hygienic design of the food and beverage as well as the pharmaceutical industry. The stainless steel housing not only resists chemicals and aggressive cleaning agents, it is also thermal-shock proof. The sensors resist hot cleaning at +60 °C immediately followed by cold rinsing at +10 °C easily. Two sensitivities can be adjusted: Normal sensitivity, max. range 1 m (for objects sizing Ø 30 mm and larger); high sensitivity, max. range 40 cm (for objects sizing Ø 15 mm and larger).

QS18U – Also available with focussing adapter

The sonic cone of some ultrasonic sensors such as the QS18U can be focussed with the UWG18 adapter. This allows small objects to be detected free from interfering ambient conditions. Measurements in tubes and barrels are also possible.

Designs and variants

	Design	Output function	Protection class	Ambient temperature	Max. range	Page
QS18 – Switching output	rectangular 15 x 35 x 33.5 mm	PNP	IP67 IP68	-20…+60 °C	50 cm	305
S18 – Switching or analog output	cylindrical/threaded Ø 18 x 80.8 mm Ø 18 x 90.9 mm Ø 18 x 85.1 mm Ø 18 x 95.1 mm	Analog output PNP/NPN	IP67	-20…+60 °C	30 cm	307
M18K – Switching or frequency output	cylindrical/threaded Ø 18 x 63 mm Ø 18 x 81 mm	frequency PNP	IP67	-25…+70 °C	20 cm 70 cm	309
T18 – Switching or analog output	cylindrical/threaded Ø 18 x 101 mm Ø 18 x 104 mm	PNP Analog output	IP67	-25…+70 °C	30 cm 100 cm	311
M25 – Opposed mode sensor	smooth barrel Ø 25 x 106 mm	PNP/NPN	IP67 / IP69K	-20…+70 °C	50 cm	313
M30 – Switching and/ or analog output	cylindrical/threaded Ø 30 x 141.5 mm Ø 30 x 131 mm Ø 30 x 160.5 mm Ø 47.5 x 150 mm Ø 65 x 163.5 mm	PNP PNP/Analog output	IP65	-25…+70 °C	30 cm 130 cm 300 cm 600 cm	315
T30 – Switching and/ or analog output	cylindrical/threaded Ø 40 x 45 mm	PNP Analog output	IP67	-40…+70 °C	100 cm 200 cm 300 cm	317

Hans Turck GmbH & Co. KG ▪ Tel. +49 208 49 52-0 ▪ Fax +49 208 49 52-264

ts and variants

	Design	Output function	Protection class	Ambient temperature	Max. range	Page
Q30 – Switching or analog output	rectangular 65 x 30 x 88 mm	PNP Analog output	IP65	0…+55 °C	30 cm 100 cm	319
CP40 – Switching or analog output	rectangular 40 x 40 x 160 mm	PNP Analog output	IP40	0…+70 °C	180 cm	321
QT50 – Switching or analog output	rectangular 74 x 84.2 x 67.4 mm 74 x 100.2 x 67.4 mm	PNP Analog output	IP67	-20…+70 °C	800 cm	323

QS18 – Compact rectangular design

The QS18U are suited for confined spaces. They withstand rough environments thanks to protection rating IP67. The sensors fit in almost any space. They are optionally available with M18 thread and can thus replace M18 threaded barrel sensors. Diffuse and retroreflective mode devices offer sensing ranges of 5 cm respectively 50 cm. They are available with PNP or NPN switching output.

Features

- Very compact rectangular design, 33.5 x 15 x 35 mm
- Plastic housing
- Protection classes IP67/IP68
- Ambient temperature -20…+60 °C
- Diffuse mode
- Retroreflective mode (with adjustable switching output)
- Max. range 100 cm
- Switching output
- LEDs indicate power ON and switching status
- Easy teaching, remote or via pushbutton

Type code QS18U

QS18U	P	A	E	Q8

QS18U Series

Series
QS18U rectangular, 15 x 35 x 33,5 mm

P Output

Output
P PNP
N NPN

A Sensing range

Sensing range
A 50…500 mm

E Design

Design
E protection class IP68 without teach button
blank protection class IP67 with teach button

Q8 Electrical connection

Electrical connection
blank cable connection, 2 m
Q pigtail with connector, Ø 8 mm
Q5 pigtail with connector, M12 x 1
Q7 connector, Ø 8 mm
Q8 connector, M12 x 1

Hans Turck GmbH & Co. KG ▪ Tel. +49 208 49 52-0 ▪ Fax +49 208 49 52-264

QS18 – Switching output

General data

Connection	male, M12 x 1	**Operating voltage**	12…30 VDC
Output	_\‾‾_, PNP	**Housing material**	ABS
Ambient temperature	-20…+60 °C	**Function**	
Range	5…50 cm		

Types and data – selection table

Type	Protection class	w	d
QS18UPAQ8	IP67	w127	d553
QS18UPAEQ8	IP68	w127	d554

Many different types available, also with cable, see type code

w Wiring diagrams on page 658 d Dimension drawing on page 670 Accessories on page 560

Cylindrical design S18U – Threaded barrel

The S18U detect small objects with pinpoint accuracy. They are IP67 rated and thus also applicable in rough environments. The sensors are built in a 18 mm threaded barrel made of plastic and are available as diffuse or retroreflective mode devices with sensing ranges between 3 cm to 30 cm Available with switching or analog output.

Features

- M18, threaded barrel
- Plastic housing, straight/angled
- Protection class IP67
- Ambient temperature -20…+60 °C
- Diffuse mode
- Retroreflective sensing mode adjustable (with switching output)
- Max. range 30 cm
- Cone angle 6°
- Analog or switching output
- Easy teaching
- Via pushbutton or external cable

Type code S18U

S18U B A R Q

S18U Series | **P** Output | **A** Range

Series

S18U	cylinder, plastic, thread Ø 18 mm

Output

B	PNP/NPN transistor output adjustable to retroreflective mode switching range adjustable via teach-in
U	0 …10 V, measuring range adjustable via teach-in
I	4 …20 mA, measuring range adjustable via teach-in

Range

A	3…300 mm

R Design | **Q** Electrical connection

Design

R	housing, angled
blank	housing, straight

Electrical connection

Q	connector, M12 x 1
blank	cable connection, 2 m

S18 – Switching or analog output

General data

Protection class	IP67	**Connection**	male, M12 x 1
Operating voltage	10…30 VDC	**Housing material**	PBT
Ambient temperature	-20…+60 °C	**Function**	
Range	3…30 cm		

Types and data – selection table

Type	Output	w	d
S18UUAQ	Analog output, 0…10 V	w128	d555
S18UIAQ	Analog output, 4…20 mA	w128	d555
S18UUARQ	Analog output, 0…10 V	w128	d556
S18UIARQ	Analog output, 4…20 mA	w128	d556
S18UBAQ	_⟋‾, PNP/NPN	w129	d555
S18UBARQ	_⟋‾, PNP/NPN	w129	d556

Many different types available, also with cable, see type code

Wiring diagrams on page 658 Dimension drawing on page 670 Accessories on page 560

M18K – Threaded barrel

The M18K detect small objects with pinpoint accuracy. They are IP67 rated and thus also applicable in rough environments. The sensors come in a small 18 mm threaded barrel made of nickel-plated brass. Available are diffuse and retroreflective mode devices with a max. range of 20 cm resp. 70 cm and equipped with a PNP transistor or an analog frequency output.

Features

- M18K, threaded barrel
- Nickel-plated brass
- Protection class IP67
- Diffuse mode (RU/RUN) and retroreflective mode (RUR)
- Max. range 70 cm
- Cone angle 6°
- Version with lateral emission (M18KS)
- Switching or analog frequency output
- LED indicates the switching status and teach mode
- Adjustments via teach input

Type code CP40, M18, M18K, M30, Q30

RUR	70	Q30	AP8X	H1141	3GD

RUR Series

Series

RU	ultrasonic sensor, diffuse mode
RUC	ultrasonic sensor, programmable, synchronizable, multiplex function, diffuse mode
RUN	ultrasonic sensor, diffuse mode
RUR	ultrasonic sensor, retroreflective mode

70 Sensing range

Sensing range

70	max. sensing range in cm

Q30 Design

Design

CP40	rectangular, plastic 40 x 40 x 160 mm or 40 x 40 x 177.5 mm
M18	cylinder/thread, M18, metal, CuZn nickel-plated, Ø 18 mm
M18K	compact design, cylinder/thread M18, metal, CuZn, nickel-plated Ø 18 mm
M30	cylinder/thread M30, metal CuZn, nickel-plated, Ø 30 mm
Q30	compact, rectangular plastic, 65 x 30 x 88 mm

AP8X Electrical version

Electrical version

A	NO
2A	2 x NO
F	frequency output
I	analog output 0…20 mA or 4…20 mA
L	analog
N	NPN
P	PNP
U	analog output 0…10 V
X	LED display
X2	2 x LED display
6	10…30 VDC input voltage
8	18…35 VDC input voltage

H1141 Electrical connection

Electrical connection

H1141	connector, M12 x 1, 4-pole
H1151	connector, M12 x 1, 5-pole
V1141	connector, M8 x 1, 4-pole
blank	cable connection, 2 m, with CP40 = terminal chamber

3GD Approval

Approval

3GD	ATEX declaration of conformity 3163M, EX II 3 G EEx nA II T6 X / II 3 D IP65 T 60 °C X (only valid for RUC…M30 family)

M18K – Switching or frequency output

General data

Protection class	IP67	**Connection**	male, M12 x 1
Operating voltage	20…30 VDC	**Housing material**	CuZn
Ambient temperature	-25…+70 °C		

Types and data – selection table

Type	Output	Function	Range	w	d
RU20-M18K-LFX-H1141	Frequency		3…20 cm	w130	d557
RU70-M18K-LFX-H1141	Frequency		10…70 cm	w130	d557
RU20-M18KS-LFX-H1141	Frequency		3…20 cm	w130	d558
RU70-M18KS-LFX-H1141	Frequency		10…70 cm	w130	d558
RUN20-M18K-AP8X-H1141	__, PNP		3…20 cm	w131	d557
RUN70-M18K-AP8X-H1141	__, PNP		10…70 cm	w131	d557
RUR20-M18K-AP8X-H1141	__, PNP		0…20 cm	w131	d557
RUR70-M18K-AP8X-H1141	__, PNP		0…70 cm	w131	d557
RUN20-M18KS-AP8X-H1141	__, PNP		3…20 cm	w131	d558
RUN70-M18KS-AP8X-H1141	__, PNP		10…70 cm	w131	d558
RUR20-M18KS-AP8X-H1141	__, PNP		0…20 cm	w131	d558
RUR70-M18KS-AP8X-H1141	__, PNP		0…70 cm	w131	d558

w Wiring diagrams on page 658 d Dimension drawing on page 670 Accessories on page 560

Cylindrical design M18 – Threaded barrel

The M18 detect small objects with pinpoint accuracy. They are IP67 rated and thus also applicable in rough environments. The electronics is incorporated in a small 18 mm threaded barrel made of nickel-plated brass. Devices with 30 cm or 100 cm range are available, either with switching or analog output. In order to avoid crosstalk, up to six devices can be synchronized simply by connecting the power supply. Alternate operation of several sensors is also possible via external control.

Features

- M18, threaded barrel
- Nickel-plated brass
- Protection class IP67
- Ambient temperature: -25…+70 °C
- Diffuse mode
- Max. range 100 cm
- Cone angle 6°
- Switching or analog output
- LED indicates the switching status
- Adjustment of operating range via potentiometer and programming device
- Synchronizing/enable input

Type code CP40, M18, M18K, M30, Q30

RUR	70	Q30	AP8X	H1141	3GD

RUR Series

Series

RU	ultrasonic sensor, diffuse mode
RUC	ultrasonic sensor, programmable, synchronizable, multiplex function, diffuse mode
RUN	ultrasonic sensor, diffuse mode
RUR	ultrasonic sensor, retroreflective mode

70 Sensing range

Sensing range

70	max. sensing range in cm

Q30 Design

Design

CP40	rectangular, plastic 40 x 40 x 160 mm or 40 x 40 x 177.5 mm
M18	cylinder/thread, M18, metal, CuZn nickel-plated, Ø 18 mm
M18K	compact design, cylinder/thread M18, metal, CuZn, nickel-plated Ø 18 mm
M30	cylinder/thread M30, metal CuZn, nickel-plated, Ø 30 mm
Q30	compact, rectangular plastic, 65 x 30 x 88 mm

AP8X Electrical version

Electrical version

A	NO
2A	2 x NO
F	frequency output
I	analog output 0…20 mA or 4…20 mA
L	analog
N	NPN
P	PNP
U	analog output 0…10 V
X	LED display
X2	2 x LED display
6	10…30 VDC input voltage
8	18…35 VDC input voltage

H1141 Electrical connection

Electrical connection

H1141	connector, M12 x 1, 4-pole
H1151	connector, M12 x 1, 5-pole
V1141	connector, M8 x 1, 4-pole
blank	cable connection, 2 m, with CP40 = terminal chamber

3GD Approval

Approval

3GD	ATEX declaration of conformity 3163M, EX II 3 G EEx nA II T6 X / II 3 D IP65 T 60 °C X (only valid for RUC…M30 family)

T18 – Switching or analog output

General data

Protection class	IP67	**Connection**	male, M12 x 1
Operating voltage	20…30 VDC	**Housing material**	CuZn
Ambient temperature	-25…+70 °C	**Function**	

Types and data – selection table

Type	Output	Range	w	d
RU30-M18-AP8X-H1141	_\‾‾_, PNP	5…30 cm	w132	d559
RU30-M18-LIX-H1141	Analog output, 4…20 mA	5…30 cm	w133	d560
RU100-M18-AP8X-H1141	_\‾‾_, PNP	15…100 cm	w132	d561
RU100-M18-LIX-H1141	Analog output, 4…20 mA	15…100 cm	w133	d562

w Wiring diagrams on page 658 d Dimension drawing on page 670 Accessories on page 560

M25U – Smooth barrel – Stainless steel

The M25U are fully encapsulated in stainless steel – barrel and sonic transducer – and are IP68/IP69K rated. This makes them ideally suited for tasks in aseptic applications of the food and beverage as well as the pharmaceutical industry. The ultrasonic opposed mode version incorporates emitter and receiver and achieves a max. range of 75 mm. The device is available with PNP/NPN switching output. Two sensitivities can be adjusted: Normal sensitivity, max. range 1 m (for objects sizing Ø 30 mm and larger); high sensitivity, max. range 40 cm (for objects sizing Ø 15 mm and larger).

Features

- All-metal ultrasonic sensor M25U
- Hygienic design, smooth barrel, stainless steel, Ø 25 mm
- Opposed mode, emitter/receiver
- Max. range 50 cm
- Protection rating IP67 / IP69K
- Resistant to aggressive cleaning agents and disinfectants
- Designed for 200,000 cleaning cycles, 15 min, water +80 °C, rapid cool down
- PNP/NPN switching output
- High sensitivity for small objects (minimum size Ø 15 mm)

Type code M25U

M25U E B Q

M25U Series

Series
M25U cylinder, smooth, stainless steel V4A, IP68/IP69K, Ø 25 mm, length: 106 mm

E Operating mode

Operating mode
E opposed mode emitter
R receiver

B Electrical output

Electrical output
B PNP/NPN

Q Electrical connection

Electrical connection
Q connector, M12 x 1

Hans Turck GmbH & Co. KG ▪ Tel. +49 208 49 52-0 ▪ Fax +49 208 49 52-264

M25 – Opposed mode sensor

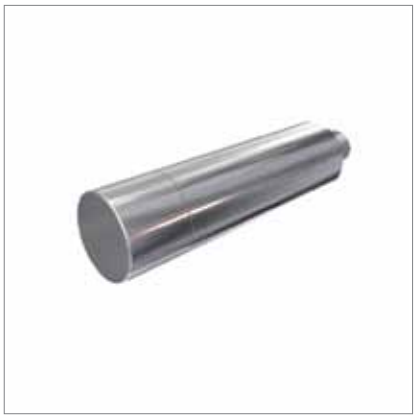

General data

Protection class	IP67 / IP69K	**Connection**	male, M12 x 1
Operating voltage	10…30 VDC	**Housing material**	V4A 1.4401 (AISI 316)
Ambient temperature	-20…+70 °C	**Range**	0…50 cm

Types and data – selection table

Type	Output	Function	w	d
M25UEQ8	–		w134	d563
M25URBQ8	, PNP/NPN		w135	d564

w Wiring diagrams on page 658 d Dimension drawing on page 670 Accessories on page 560

Cylindrical design M30 – Threaded barrel

The M30 detect small objects with pinpoint accuracy and are installed in a 30 mm threaded barrel made of nickel-plated brass. Available are versions with 30, 130, 300 and 600 cm range, switching output, switching and analog output or with two switching outputs. In order to avoid crosstalk, up to six RUC devices can be synchronized simply by connecting the power supply. Alternate operation of several sensors is also possible via external control or synchronizing/enable input.

Features

- M30 housing, threaded barrel
- Nickel-plated brass
- Protection class IP65
- Ambient temperature -25 … +70 °C
- Diffuse mode
- Max. range 600 cm
- Cone angle 6°
- Switching or analog output or two switching outputs
- LED indicates the switching status
- Adjustment of operating range via potentiometer and programming device
- Devices with synchronizing/enable input
- 3GD version for explosion hazardous areas

Type code CP40, M18, M18K, M30, Q30

RUR	70	Q30	AP8X	H1141	3GD

RUR Series

Series

RU	ultrasonic sensor, diffuse mode
RUC	ultrasonic sensor, programmable, synchronizable, multiplex function, diffuse mode
RUN	ultrasonic sensor, diffuse mode
RUR	ultrasonic sensor, retroreflective mode

70 Sensing range

Sensing range

70	max. sensing range in cm

Q30 Design

Design

CP40	rectangular, plastic 40 x 40 x 160 mm or 40 x 40 x 177.5 mm
M18	cylinder/thread, M18, metal, CuZn nickel-plated, Ø 18 mm
M18K	compact design, cylinder/thread M18, metal, CuZn, nickel-plated Ø 18 mm
M30	cylinder/thread M30, metal CuZn, nickel-plated, Ø 30 mm
Q30	compact, rectangular plastic, 65 x 30 x 88 mm

AP8X Electrical version

Electrical version

A	NO
2A	2 x NO
F	frequency output
I	analog output 0…20 mA or 4…20 mA
L	analog
N	NPN
P	PNP
U	analog output 0…10 V
X	LED display
X2	2 x LED display
6	10…30 VDC input voltage
8	18…35 VDC input voltage

H1141 Electrical connection

Electrical connection

H1141	connector, M12 x 1, 4-pole
H1151	connector, M12 x 1, 5-pole
V1141	connector, M8 x 1, 4-pole
blank	cable connection, 2 m, with CP40 = terminal chamber

3GD Approval

Approval

3GD	ATEX declaration of conformity 3163M, EX II 3 G EEx nA II T6 X / II 3 D IP65 T 60 °C X (only valid for RUC…M30 family)

M30 – Switching and/or analog output

General data

Protection class	IP65	**Connection**	male, M12 x 1
Operating voltage	20…30 VDC	**Housing material**	CuZn
Ambient temperature	-25…+70 °C	**Function**	

Types and data – selection table

Type	Output	Range	w	d
RUC30-M30-AP8X-H1141	__, PNP	6…30 cm	w132	d565
RUC30-M30-2AP8X-H1151	2x __, PNP	6…30 cm	w136	d565
RUC30-M30-LIAP8X-H1151	__, PNP/analog output, 4…20 mA	6…30 cm	w137	d565
RUC130-M30-AP8X-H1141	__, PNP	20…130 cm	w132	d565
RUC130-M30-2AP8X-H1151	2x __, PNP	20…130 cm	w136	d565
RUC130-M30-LIAP8X-H1151	__, PNP/analog output, 4…20 mA	20…130 cm	w137	d565
RUC300-M3047-AP8X-H1141	__, PNP	40…300 cm	w132	d566
RUC300-M3047-2AP8X-H1151	2x __, PNP	40…300 cm	w136	d566
RUC300-M3047-LIAP8X-H1151	__, PNP/analog output, 4…20 mA	40…300 cm	w137	d566
RUC600-M3065-AP8X-H1141	__, PNP	60…600 cm	w132	d567
RUC600-M3065-2AP8X-H1151	2x __, PNP	60…600 cm	w136	d567
RUC600-M3065-LIAP8X-H1151	__, PNP/analog output, 4…20 mA	60…600 cm	w137	d567

w Wiring diagrams on page 658 d Dimension drawing on page 670 Accessories on page 560

Cylindrical design T30U – Threaded barrel

The T30U offer many output configurations in a universal housing. They are applied to monitor filling levels in tanks or detect transparent materials. Available are versions with two switching outputs as well as one switching and one analog output for current or voltage. Thus measurements and switching operations can be implemented simultaneously. Switching and measuring outputs can be programmed to same or different operating ranges. The sensors are available as diffuse mode devices with max. sensing ranges of 100, 200 or 300 cm.

Features

- T30U, plastic housing with M30 thread
- Protection class IP67
- Ambient temperature -20…+70 °C
- Diffuse mode
- Max. ranges 100, 200, 300 cm
- Analog and switching output or two switching outputs
- The outputs can either be programmed together or separately with rising or falling analog output curve.
- LEDs indicate power ON, signal strength and output status
- Easy teaching via pushbuttons or external cable
- Chemical-resistant and PTFE-coated versions

Type code T30U

T30U	DP	B	Q8

T30U Series

Series

T30U	cylinder, thread Ø 40 mm length 45 mm, without temperature compensation
T30UX	cylinder, thread Ø 40 mm length 45 mm, with temperature compensation

DP Output

Output

DP	PNP (2 x)
UP	PNP, analog output 0…10 V
IP	PNP, analog output 4…20 mA

B Range

Range

A	15…100 cm
B	30…200 cm
C	40…300 cm

Q8 Electrical connection

Electrical connection

Q8	connector, M12 x 1
blank	cable connection, 2 m

Hans Turck GmbH & Co. KG ▪ Tel. +49 208 49 52-0 ▪ Fax +49 208 49 52-264

T30 – Switching and/or analog output

General data

Protection class	IP67	**Connection**	male, M12 x 1
Operating voltage	10…30 VDC	**Housing material**	Polyester
Ambient temperature	-40…+70 °C	**Function**	diffuse mode sensor

Types and data – selection table

Type	Output	Range	w	d
T30UXDAQ8	_\‾‾_, PNP	10…100 cm	w132	d568
T30UXDBQ8	_\‾‾_, PNP	20…200 cm	w132	d568
T30UXDCQ8	_\‾‾_, PNP	30…300 cm	w132	d568
T30UXUAQ8	Analog output, 0…10 V	10…100 cm	w138	d568
T30UXUBQ8	Analog output, 0…10 V	20…200 cm	w138	d568
T30UXUCQ8	Analog output, 0…10 V	30…300 cm	w138	d568
T30UXIAQ8	Analog output, 4…20 mA	10…100 cm	w133	d568
T30UXIBQ8	Analog output, 4…20 mA	20…200 cm	w133	d568
T30UXICQ8	Analog output, 4…20 mA	30…300 cm	w133	d568

Many different types available, also with cable, see type code

w Wiring diagrams on page 658 d Dimension drawing on page 670 Accessories on page 560

Q30 – Compact rectangular design

The Q30 detect small objects with pinpoint accuracy. They are available as diffuse mode sensors with sensing ranges of 30 cm respectively 100 cm, optionally with switching or analog output. In order to avoid crosstalk, up to six devices can be synchronized simply by connecting the power supply. Alternate operation of several sensors is also possible via external control or synchronizing/enable input.

Features

- Compact rectangular design, 88 x 65 x 30 mm
- Plastic housing
- Protection class IP65
- Ambient temperature 0…+55 °C
- Diffuse mode
- Max. range 100 cm
- Cone angle 6°
- Analog or switching output
- LEDs indicate switching status/object detected
- Easy adjustment of operating range via potentiometer
- Synchronizing/enable input

Type code CP40, M18, M18K, M30, Q30

RUR	70	Q30	AP8X	H1141	3GD

RUR Series

Series

RU	ultrasonic sensor, diffuse mode
RUC	ultrasonic sensor, programmable, synchronizable, multiplex function, diffuse mode
RUN	ultrasonic sensor, diffuse mode
RUR	ultrasonic sensor, retroreflective mode

70 Sensing range

Sensing range

70	max. sensing range in cm

Q30 Design

Design

CP40	rectangular, plastic 40 x 40 x 160 mm or 40 x 40 x 177.5 mm
M18	cylinder/thread, M18, metal, CuZn nickel-plated, Ø 18 mm
M18K	compact design, cylinder/thread M18, metal, CuZn, nickel-plated Ø 18 mm
M30	cylinder/thread M30, metal CuZn, nickel-plated, Ø 30 mm
Q30	compact, rectangular plastic, 65 x 30 x 88 mm

AP8X Electrical version

Electrical version

A	NO
2A	2 x NO
F	frequency output
I	analog output 0…20 mA or 4…20 mA
L	analog
N	NPN
P	PNP
U	analog output 0…10 V
X	LED display
X2	2 x LED display
6	10…30 VDC input voltage
8	18…35 VDC input voltage

H1141 Electrical connection

Electrical connection

H1141	connector, M12 x 1, 4-pole
H1151	connector, M12 x 1, 5-pole
V1141	connector, M8 x 1, 4-pole
blank	cable connection, 2 m, with CP40 = terminal chamber

3GD Approval

Approval

3GD	ATEX declaration of conformity 3163M, EX II 3 G EEx nA II T6 X / II 3 D IP65 T 60 °C X (only valid for RUC…M30 family)

Q30 – Switching or analog output

General data

Protection class	IP65	**Connection**	male, M12 x 1
Operating voltage	18…35 VDC	**Housing material**	Crastin, SK645FR
Ambient temperature	0…+55 °C	**Function**	diffuse mode sensor
Housing designation	Q30		

Types and data – selection table

Type	Output	Range	w	d
RU30-Q30-AP8X-H1141	_⟋‾, PNP	6…30 cm	w132	d569
RU30-Q30-LUX-H1141	Analog output, 0…10 V	6…30 cm	w138	d569
RU100-Q30-AP8X-H1141	_⟋‾, PNP	20…100 cm	w132	d569
RU100-Q30-LUX-H1141	Analog output, 0…10 V	20…100 cm	w138	d569

w Wiring diagrams on page 658 d Dimension drawing on page 670 Accessories on page 560

CP40 – Rectangular design

The CP40 are ideal for detecting glass or metal objects with smooth surfaces, even with oblique propagating sonic waves. They cover a wide sensing range of 5 cm to 180 cm with a cone angle of 60°. They are available with PNP transistor or analog output 0…10 V/0…20 mA.

Features

- Compact rectangular design, 160 x 40 x 40 mm
- Plastic housing
- Protection class IP40
- Ambient temperature 0…+70 °C
- Diffuse mode
- Max. range 180 cm
- Cone angle 60°
- Rotatable sensor head to align sonic cone
- Analog or switching output
- LEDs indicate switching status / object detected
- Adjustment of operating range via potentiometer

Type code CP40, M18, M18K, M30, Q30

RUR	70	Q30	AP8X	H1141	3GD

RUR	Series	70	Sensing range	Q30	Design

Series

RU	ultrasonic sensor, diffuse mode
RUC	ultrasonic sensor, programmable, synchronizable, multiplex function, diffuse mode
RUN	ultrasonic sensor, diffuse mode
RUR	ultrasonic sensor, retroreflective mode

Sensing range

70	max. sensing range in cm

Design

CP40	rectangular, plastic 40 x 40 x 160 mm or 40 x 40 x 177.5 mm
M18	cylinder/thread, M18, metal, CuZn nickel-plated, Ø 18 mm
M18K	compact design, cylinder/thread M18, metal, CuZn, nickel-plated Ø 18 mm
M30	cylinder/thread M30, metal CuZn, nickel-plated, Ø 30 mm
Q30	compact, rectangular plastic, 65 x 30 x 88 mm

AP8X	Electrical version	H1141	Electrical connection	3GD	Approval

Electrical version

A	NO
2A	2 x NO
F	frequency output
I	analog output 0…20 mA or 4…20 mA
L	analog
N	NPN
P	PNP
U	analog output 0…10 V
X	LED display
X2	2 x LED display
6	10…30 VDC input voltage
8	18…35 VDC input voltage

Electrical connection

H1141	connector, M12 x 1, 4-pole
H1151	connector, M12 x 1, 5-pole
V1141	connector, M8 x 1, 4-pole
blank	cable connection, 2 m, with CP40 = terminal chamber

Approval

3GD	ATEX declaration of conformity 3163M, EX II 3 G EEx nA II T6 X / II 3 D IP65 T 60 °C X (only valid for RUC…M30 family)

CP40 – Switching or analog output

General data

Protection class	IP40	**Connection**	Terminal chamber, Terminal box with cable gland
Housing material	PBT	**Ambient temperature**	0…+70 °C
Function	diffuse mode sensor	**Range**	5…180 cm

Types and data – selection table

Type	Operating voltage	Output	w	d
RU100-CP40-AP6X2	10…30 VDC	⎯⟋⎯, PNP	w139	d570
RU100-CP40-LIUX	15…30 VDC	Analog output, 0…20 mA, 0…10 V	w140	d571

w Wiring diagrams on page 658 d Dimension drawing on page 670 Accessories on page 560

QT50 – Rectangular design

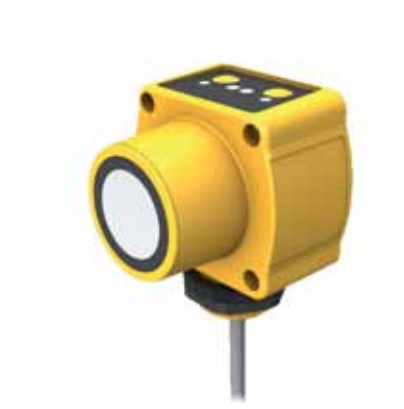

The QT50U are available as diffuse mode sensors with sensing ranges of 20 cm or 800 cm and with switching or analog output. Many configurations can be set via DIP switch, allowing the sensors to be mounted in nearly any application. The fully encapsulated devices are ideally suited for monitoring filling levels of liquids and solids: Versions with analog output are best suited for continuous monitoring. Versions with two digital outputs allow limit values for close and distant range to be adjusted separately for each output.

Features

- Compact rectangular design, 67.4 x 74 x 84.2 mm
- Plastic housing
- Protection class IP67
- Ambient temperature -20…+70 °C
- Diffuse mode
- Max. range 800 cm
- Cone angle 12°
- Analog and switching output
- LEDs indicate the signal strength
- Configuration via DIP/rotary switch
- Easy teaching
- Via pushbutton or external cable

Type code QT50U

QT50U	LB	Q6

QT50U	Series	LB	Electrical output	Q6	Electrical connection

Series
QT50U rectangular:
74 x 84 x 67.4 mm
74 x 100.2 x 67.4 mm

Electrical output
LB 2 x analog output, 0…10 V oder 4…20 mA
DB 2 x switching outputs, PNP or NPN

Electrical connection
Q6 connector, M12 x 1, 5-pole
blank cable connection, 2 m

QT50 – Switching or analog output

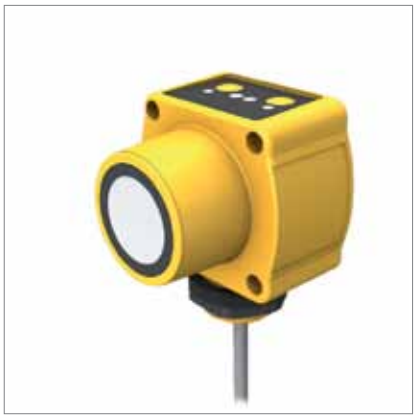

General data

Protection class	IP67	**Connection**	male, M12 x 1
Operating voltage	10…30 VDC	**Housing material**	ABS
Ambient temperature	-20…+70 °C	**Function**	diffuse mode sensor
Range	20…800 cm		

Types and data – selection table

Type	Output	w	d
QT50UDBQ6	2x ⎽╲⎽, PNP	w141	d572
QT50ULBQ6	Analog output, 4…20 mA, 0…10 V	w142	d572

Many different types available, also with cable, see type code

w Wiring diagrams on page 658 d Dimension drawing on page 670 Accessories on page 560

Flow sensors

Flow sensors - Monitoring of limit values and flow patterns

Flow sensors are applied in automated manufacturing to detect deviating flow speeds of gases and liquids quickly and reliably. They monitor coolant circuits, run-dry protection of pumps or control the flow of exhaust air ducts and air conditioning systems.
Flow sensors are not applied to perform precise measurements but to monitor limit values and flow patterns. In other words, the increase or decrease of flow speed. In this context, high repeatability is the most important feature.
The output signal can either be analog or binary, depending on whether continuous flow or a limit value is to be monitored.
TURCK insertion flow sensors operate on the thermo-dynamic principle: The flow speed is determined from thermal energy dissipated by a probe. The dissipated heat quantity serves as a measure for the flow speed.
TURCK flow sensors are available as compact devices with integrated signal processor or as insertion or inline sensor with separate processing unit. Sensor and housing are available in different materials and with different connectivity. The connection technology is made for many different industrial application conditions:

- Standard sensors for factory automation
- Sensors for high temperatures and pressures
- Sensors for the food and pharmaceutical industries
- Chemical-resistant sensors
- Sensors for the Ex area
- Flow sensors for the control of gaseous media

Our strengths – Your advantages

Monitoring of flow speeds and patterns

Flow monitoring of media plays an important role in many applications of factory and process automation. Cooling circuits, run-dry protection of pumps or the flow control of exhaust air ducts and air conditioning systems are typical applications. Electronic flow sensors are increasingly applied to detect critical changes in flow and to signal them to a control unit.

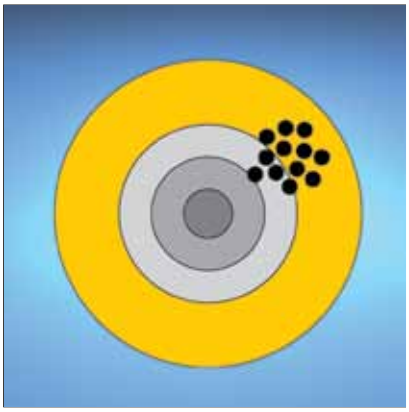

High repeatability

Flow sensors are mainly applied to control flow speeds. Precise and expensive measurement is not the aim but rather the control of limit values. High repeatability is therefore the most important feature. The sensors not only detect limit values of flows but also flow patterns. That is, the increase or decrease of flow speed. The output signal can either be analog or binary, depending on whether continuous flow or a limit value is to be monitored.

High performance in a compact housing

A great variety of types are available, such as insertion and inline flow sensors as well as compact sensors and sensors with downstream electronics. They are easily integrated in existing line configurations and are space saving alternatives for new constructions. Not only coolant circuits and temperature cycles are precisely monitored but also dosage intervals, like in water purification systems. Limit value monitoring as well as analog linearized switching outputs are available for these tasks.

ur advantages

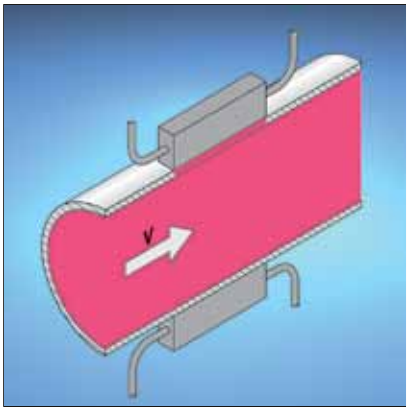

Calorimetric flow sensors

Calorimetric flow sensors work on the thermodynamic principle and are applied to monitor flow speeds of liquids and gases. Depending on the type, they also measure the media temperature. Short response times within seconds and stable values displayed even under the influence of strong temperature fluctuations, make these sensors particularly suited for flow rate monitoring in return and cooling circuits.

Different designs and versions

You can choose between insertion and inline flow sensors as well as between compact devices and sensors with downstream electronic evaluation system. All sensors can be easily integrated in existing line configurations and are space saving alternatives for new constructions. Not only coolant circuits and temperature cycles are precisely monitored but also dosage intervals, like in water purification systems. Limit value monitoring and analog switching outputs are available for these tasks.

The right solution for complex applications

Depending on the application, a broad range of different flow sensors is required. TURCK offers them in different material qualities, for liquid as well as for gaseous media. The product portfolio also comprises flow sensors for the Ex-area, extremely chemical-resistant versions, high-temperature and pressure-resistant versions as well as sensors for the pharmaceutical and food industries.

Our strengths – Your advantages

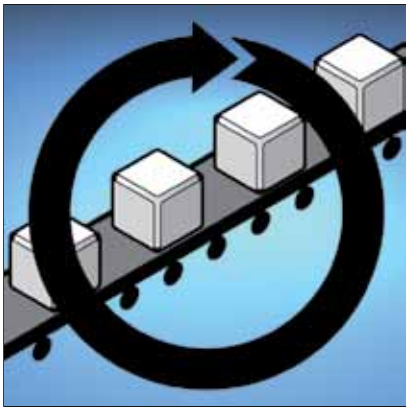

High system availability

Flow meters proof their outstanding reliability in rough environments of factory and process automation. This is guaranteed through excellent EMC properties and protection rating IP67. A practical housing, durable mounting aids and a well legible LED chain are the main features considered in the design. Flow meters thus withstand the special ambient conditions of many applications easily. Use these benefits to optimize your production processes.

Maximum planning freedom

The flow meters provide maximum planning freedom with just a few device types, many connection possibilities and different mounting aids. From polling of single switchpoints over analog output signals to a well legible display, even from a greater distance: Profit from the extensive standard product range of TURCK flow meters providing more flexibility to your application.

User-friendly operation

The compact flow sensors feature user-friendly potentiometers at the front for comfortable adjustment of the switchpoint. The LED chain indicates the current flow state.

Hans Turck GmbH & Co. KG ▪ Tel. +49 208 49 52-0 ▪ Fax +49 208 49 52-264

ur advantages

Easy mounting

Unlike insertion sensors, inline types are installed in pipes. The pipe may be connected directly via cutting ring fittings or a matching adapter. With insert nuts located at the bottom, the sensor can be mounted to a baseplate. Alternatively, the baseplate can be screwed to the housing for frontal mounting of the sensor.

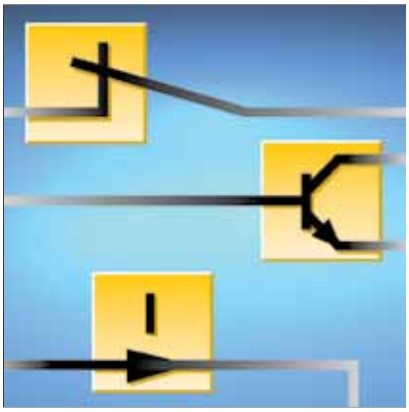

Many different output signals

For further processing of output signals via control or PLC , the flow sensors provide a standard PNP switching and a relay output as well as an analog 4…20 mA output. Parameters such as switchpoint, temperature, start and end value at sensors with analog output signal, are adjusted via potentiometer.

High serviceability

Thanks to flexible mounting options, the user-friendly operation and adjustment, the well legible 3-digit 7-segment display and last but not least, the excellent repeatability, flow sensors offer calculable advantages.

Flow sensors for special applications

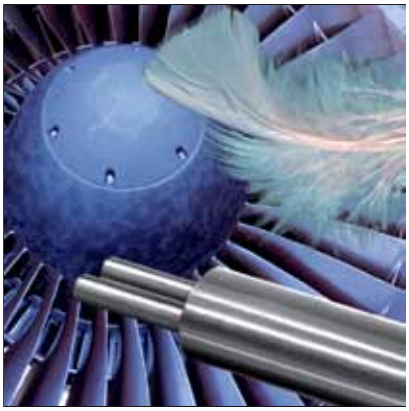

Sensors for gaseous media

TURCK offers special versions for monitoring gaseous media which are especially adjusted to the low thermal conductivity of gases. They are typically applied in air conditioning and ventilation systems, filling and coating lines as well as in motor ventilation and cabinets.

Sensors for the Ex area

Flow sensors for areas exposed to gas and dust-explosion hazards are ATEX approved and can only be operated in combination with approved external signal processors [Ex ia]. Inline sensors are available for zone 1 and zone 0 and mounted with a T-piece or a weld-on adapter. The inline sensors for zone 1 are mounted directly in pipes with cutting ring fittings, thus ensuring a tight and pressure resistant connection.

Chemical-resistant sensors

Stainless steel 1.4571 is often not resistant enough for aggressive media. Depending on the application, chemical-resistant materials such as PTFE and PVDF (Dyflor), stainless steel alloy (Hastelloy) or titanium are used. These materials are highly resistant to many chemicals.

Hans Turck GmbH & Co. KG ▪ Tel. +49 208 49 52-0 ▪ Fax +49 208 49 52-264

ecial applications

Sensors for high temperatures and pressures

More and more applications require sensors that withstand temperatures outside the standard range. We offer sensors for extreme ambient temperatures of up to +120 °C and operating pressures of up to 500 bar. They are typically applied in production lines and withstand rinsing with hot cleaning liquids or in plastics processing machines. These sensors are identified by D090 or D100 in the type code for high-temperature applications and D500 for high-pressure applications.

Sensors for the food and pharmaceutical industry

The mechanics and electronics have to fulfill special requirements of the food and pharmaceutical industry. Food-safe connections such as Tri-Clamp or dairy screw connections (DIN11851) are conform to the 3 A sanitary standard. The standard cleaning cycles CIP and SIP with rapid temperature changes impose severe strain on the electronics and thus require special protective measures. For this reason the sensors are made of special steel 1.4404 and 1.4435. Customized connections such as GEA-Varivent or APV flanges are available as well as other metal based materials.

Type code

FCS	–	G1/2	A4	–	A	P	8	X	–	H1	1	4	1	/	L120
FCS	Functional principle	–	G1/2	A4	Design	–	A	P	8	X	Electrical version	–			

Series flow sensors

FCI	calorimetric, inline
FCS	calorimetric, insertion

Materials

A4	stainless steel A4 (1.4404 or 1.4571)
A4P	sensor stainless steel A4 (1.4404 or 1.4571), housing plastic,
CT	ceramics/PTFE)
DY	PVDF (Dyflor)
HA2P	sensor stainless steel A2 (1.4305), housing plastic with coupling nut
HB2	Hastelloy B2 (2.4617)
HC22	Hastelloy C22 (2.4603)
HC4	Hastelloy C4 (2.4610)
P	plastic housing
T	PTFE
TN	titanium alloy (3.7235)

Mechanical connection

50	Tri-Clamp, Ø 50.5 mm
68	Varivent, Ø 68 mm
10D08	compression fittings for smooth barrel, outer Ø 10 mm
34D10	Tri-Clamp, Ø 34 mm (FCI with barrel Ø 10 mm)
D03	gland, 4 mm barrel Ø
D04	male thread G1/4", 4 mm barrel Ø
D06	female thread G1/4", 6 mm barrel Ø
D09	female thread, 9 mm barrel Ø
D15	male thread G1/2", 15 mm barrel Ø
D20	male thread G3/4", 19 mm barrel Ø
DN25	flange DN25/PN40 or Tri-Clamp DN25
G1/4	thread G1/4"
G1/2	thread G1/2"
GL1/2	thread G1/2", long
GL3/4	thread G3/4", long
K20	smooth barrel Ø 20 mm
M18	threaded barrel M18 x 1
N1/2	thread 1/2 NPT
N3/4	thread 3/4 NPT
TCD04	gland, Ø 4 mm, inline sensor with 3.6 mm barrel Ø

Indication

…X	number of LEDs or multicolor LED

Voltage range

8	19.2…28.8 VDC

Output mode

P	PNP
N	NPN
R	relay output

Output function

2A	2 x NO, working current
A	1 x NO, working current
R	1 x NC, closed current
V	changeover contact
LI	analog output (I)
LIU	NO/NC programmable, analog + I + PNP
LU	analog output (U)
2U	NO/NC programmable, 2 x PNP
U	NO/NC programmable,
NA	sensor with downstream electronics (processor units MC96, MK96, MS96)
NAEX	sensor for Ex zone 1 with downstream electronics (processor units MC96, MS96)
NAEX0	sensor for Ex zone 0 with downstream electronics (processor units MC96, MS96)

Hans Turck GmbH & Co. KG ▪ Tel. +49 208 49 52-0 ▪ Fax +49 208 49 52-264

H1	1	4	1	Electrical connection: connector	/	L120	Special versions

Assignment

0	M12 x 1, connector (modified)
1	M12 x 1, connector (standard)
blank	2 m cable connection

Number of contacts

4	4 contacts

Connector type

1	straight

Connector type

H1	connector M12 x 1

Special version

A	air-flow sensors gaseous media
D003	process connection Varivent
D014	process connection Tri-Clamp
D024	material test certificate 3.1b
D041	sensor and mounting block glued together
D090	high-temperature version up to 100 °C
D100	high-temperature version up to 120 °C
D500	high-pressure version upt to 500 bar
L065	insertion depth 65 mm (incl. thread)
L080	insertion depth 80 mm (incl. thread)
L115	insertion depth 115 mm (incl. thread)
L120	insertion depth 120 mm (incl. thread)
L200	insertion depth 200 mm (incl. thread)
M12	process connection female thread M12 x 1.5
M16	process connection female thread M16 x 1.5
5M	cable connection, 5 m
10M	cable connection, 10 m
24VDC	supply voltage 24 VDC
230VAC	supply voltage 230 VAC

Type code

FM X – IM – 3UP 63 X

FM X Series

Function

blank	connection of non-Ex sensors FCS-/FCI-…-NA series FM is IO-Link capable
X	connection of Ex sensors FCS-/FCI-…-NAEX(0) series FMX is IO-Link resp. HART capable

Series

FM	flow module, processor unit for the connection of TURCK flow sensors

– IM Housing

Housing

IM	Interfacemodul (modular housing)

– 3UP 63 X Electrical version

LED display

X	4 status LEDs, LED band

Voltage range

38	20…125 VDC/ 20…250 VAC
63	20…30 VDC

Outputs

3UP	one PNP output (20…30 VDC) each for monitoring of flow, temperature and errors
3UR	one relay output (< 250 VAC/60VDC) each for monitoring of flow, temperature and error
2UPLi	one PNP output (20…30 VDC) each for monitoring of temperature and errors and one analog output (4…20 mA) for monitoring of flow

Designs and variants

	Medium	Operating ranges	Medium temperature	Material in contact with medium	Pressure resistance	Housing material	Output	Page
G 1/4" – Stainless steel housing	Liquids	Water: 1...150 cm/s Oil: 3...300 cm/s	-20...80 °C	V4A (1.4571)	100 bar	V4A (1.4571)	_\‾_, PNP _\‾_, Relay output	343
G 1/2" – Stainless steel housing	Liquids	Water: 1...150 cm/s Oil: 3...300 cm/s	-20...80 °C	V4A (1.4571)	100 bar	V4A (1.4571)	_\‾_, PNP _\‾_, NPN	343
G1/2" – Dyflor housing	Liquids	Water: 1...70 cm/s Oil: 2...100 cm/s	-10...80 °C	PVDF	5 bar	PVDF	_\‾_, PNP	344
GL1/2" – Stainless steel housing	Liquids	Water: 1...150 cm/s Oil: 3...300 cm/s	-20...80 °C	V4A (1.4571)	100 bar	V4A (1.4571)	_\‾_, PNP	344
N 1/2" – Stainless steel housing	Liquids	Water: 1...150 cm/s Oil: 3...300 cm/s	-20...80 °C	V4A (1.4571)	100 bar	V4A (1.4571)	_\‾_, PNP	345
Varivent – Stainless steel A4 housing	Liquids	Water: 1...150 cm/s Oil: 3...300 cm/s	0...80 °C	V4A (1.4404)	10 bar	V4A (1.4404)	_\‾_, PNP	345
1 1/2" TriClamp – Stainless steel	Liquids	Water: 1...150 cm/s Oil: 3...300 cm/s	0...80 °C	V4A (1.4404)	10 bar	V4A (1.4404)	_\‾_, PNP	356

Hans Turck GmbH & Co. KG ▪ Tel. +49 208 49 52-0 ▪ Fax +49 208 49 52-264

ts and variants

	Medium	Operating ranges	Medium temperature	Material in contact with medium	Pressure resistance	Housing material	Output	Page
G1/4" – Plastic housing	Liquids	Water: 1...150 cm/s Oil: 3...300 cm/s	-20...80 °C	V4A (1.4571)	100 bar	PBT	PNP	356
G1/2" – Plastic housing	Liquids	Water: 1...150 cm/s Oil: 3...300 cm/s	-20...80 °C	V4A (1.4571)	100 bar	PBT	PNP Relay output	347
GL1/2" – Plastic housing	Liquids Air	Water: 1...150 cm/s Oil: 3...300 cm/s Air: 0.5...30 m/s	-20...80 °C	V4A (1.4571) V2A (1.4305)	100 bar 30 bar	PBT	PNP Relay output analog output, 4...20 mA	347
G 1" – Female – Coupling nut – Plastic housing	Air	Air: 0.5...30 m/s	-20...80 °C	V2A (1.4305)	3 bar	PBT	analog output, 4...20 mA Relay output	348
N 1/2" – Plastic housing	Liquids	Water: 1...150 cm/s Oil: 3...300 cm/s	-20...80 °C	V4A (1.4571)	100 bar	PBT	PNP	348
G1/4" – Male thread – Plastic housing	Air Liquids	Air: 0.5...40 m/s Flow Rate: 0,01...1 l/min Flow Rate: 0,1...6 l/min	-20...80 °C	V4A (1.4571)	20 bar	PBT	PNP analog output, 4...20 mA Relay output	351
G1/2" – Male thread – Plastic housing	Liquids	Flow Rate: 3...20 l/min	-20...80 °C	V4A (1.4571)	20 bar	PBT	PNP	351

Designs and variants

	Medium	Operating ranges	Medium temperature	Material in contact with medium	Pressure resistance	Housing material	Output	Page
G3/4" – Male thread – Plastic housing	Liquids	Flow Rate: 4...30 l/min	-20...80 °C	V4A (1.4571)	20 bar	PBT	_⌒‾, PNP	352
G1/4" – Female thread – Plastic housing	Liquids	Flow Rate: 0,02...3 l/min	0...60 °C	Al_2O_3/PTFE	5 bar	PBT	_⌒‾, Relay output analog output, 4...20 mA _⌒‾, PNP	352
4 mm pipe connection – Plastic housing	Liquids	Flow Rate: 0,001...0,2 l/min	0...60 °C	V4A (1.4571)	1 bar	PBT	_⌒‾, PNP analog output, 4...20 mA _⌒‾, Relay output	353
TriClamp DN 10 – Plastic housing	Liquids	Flow Rate: 0,1...6 l/min	-20...80 °C -20...60 °C	V4A (1.4404)	20 bar	PBT	_⌒‾, Relay output analog output, 4...20 mA _⌒‾, PNP	353

Hans Turck GmbH & Co. KG ▪ Tel. +49 208 49 52-0 ▪ Fax +49 208 49 52-264

ts and variants

Designs and variants

	Medium	Operating ranges	Medium temperature	Material in contact with medium	Pressure resistance	Housing material	Page
G 1/4" – Stainless steel housing	Liquids	Water: 1...150 cm/s Oil: 3...300 cm/s Water: 1...100 cm/s Oil: 3...200 cm/s	-20...80 °C -20...85 °C -20...60 °C	V4A (1.4571)	100 bar 60 bar	V4A (1.4571)	355
G 1/4" – PTFE housing	Liquids	Water: 1...70 cm/s Oil: 2...100 cm/s	-10...70 °C	PTFE	5 bar	PTFE	355
G 1/2" – Stainless steel housing	Liquids	Water: 1...150 cm/s Oil: 3...300 cm/s Water: 1...100 cm/s Oil: 3...200 cm/s	-20...80 °C -20...85 °C -20...60 °C	V4A (1.4571)	100 bar 60 bar	V4A (1.4571)	356
G3/4" – Stainless steel housing	Liquids	Water: 1...150 cm/s Oil: 3...300 cm/s Water: 1...100 cm/s Oil: 3...200 cm/s	-20...80 °C -20...60 °C	V4A (1.4571)	100 bar 60 bar	V4A (1.4571)	356
GL1/2" – PTFE housing	Liquids	Water: 1...70 cm/s Oil: 2...100 cm/s	-10...70 °C	PTFE	5 bar	PTFE	357
GL1/2" – Stainless steel housing	Liquids Air	Water: 1...150 cm/s Oil: 3...300 cm/s Water: 1...100 cm/s Oil: 3...200 cm/s Air: 2...20 m/s Air: 0.5...30 m/s	-20...80 °C -20...85 °C -20...60 °C 10...120 °C	V4A (1.4571) V2A (1.4305)	100 bar 60 bar 10 bar 30 bar	V4A (1.4571) V2A (1.4305)	357
N 1/2" – Stainless steel housing	Liquids	Water: 1...150 cm/s Oil: 3...300 cm/s Water: 1...100 cm/s Oil: 3...200 cm/s	-20...80 °C -20...85 °C	V4A (1.4571)	100 bar 60 bar	V4A (1.4571)	358
N3/4" – Stainless steel housing	Liquids	Water: 1...150 cm/s Oil: 3...300 cm/s	-20...80 °C	V4A (1.4571)	100 bar	V4A (1.4571)	358

Hans Turck GmbH & Co. KG ▪ Tel. +49 208 49 52-0 ▪ Fax +49 208 49 52-264

ts and variants

	Medium	Operating ranges	Medium temperature	Material in contact with medium	Pressure resistance	Housing material	Page
DN25 – Dairy screw connection – Stainless steel	Liquids	Water: 1...150 cm/s Oil: 3...300 cm/s	10...120 °C	V4A (1.4404)	10 bar	V4A (1.4404)	359
1 1/2" TriClamp – Stainless steel	Liquids	Water: 1...150 cm/s Oil: 3...300 cm/s	10...120 °C	V4A (1.4404)	10 bar	V4A (1.4404)	359
Varivent – Stainless steel	Liquids	Water: 1...150 cm/s Oil: 3...300 cm/s	10...120 °C	V4A (1.4571)	10 bar	V4A (1.4571)	360
M12x1.5 – Female – Stainless steel	Liquids	Flow Rate: 0,01...0,15 l/min Flow Rate: 0,005...0,15 l/min	-20...70 °C -20...80 °C	V4A (1.4571)	6 bar 10 bar	V4A (1.4571)	363
M16x1.5 – Female – Stainless steel	Liquids	Flow Rate: 0,05...0,9 l/min Flow Rate: 0,03...0,9 l/min	-20...70 °C -20...80 °C	V4A (1.4571)	6 bar 16 bar	V4A (1.4571)	363

	Flow monitoring	Output	Page
FM – Flow modules	Current output transistor output relay output	4...20 mA, Analog output programmable, PNP/NPN programmable, Relay output	365
FMX - Flow Module	Current output transistor output relay output	4...20 mA, Analog output programmable, PNP/NPN programmable, Relay output	367

Compact devices – insertion

The compact devices incorporate sensor and signal processor. They are mounted with a T-piece, a weld-on adapter or with a matching adapter block. The probe is inserted in the pipe and has direct contact with the medium. The integrated LED chain indicates the current flow state. The sensors are available either with transistor, relay switching or analog current output. They are also available with different mechanical process connections.

Features

- Insertion flow sensor in a stainless steel or plastic housing
- Sensor and signal processor enclosed in the housing
- Ideal for all pipe diameters of DN20 and larger
- Adjustable to flow speeds between 0.5 … 30 m/s
- Switchpoint freely adjustable within the operating range
- LED band for flow indication
- Transistor, relay or analog current output
- Pressure-resistant up to 100 bar

Properties

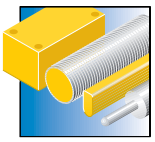

Designs
Compact insertion flow sensor, for pipe diameters of DN20 and larger

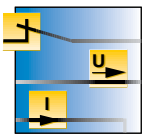

Electrical versions
PNP transistor, relay or current output 4…20 mA

Monitoring range
Adjustable to flow speeds between 0.5 … 30 m/s gaseous media and 1…300 cm/s for liquids

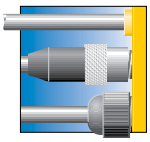

Electrical connections
Via A-coded male M12 x 1 or connection cable

Materials
Housing and sensor made of stainless steel or plastic

Special features
Switchpoint adjusted via potentiometer, LED chain for status indication, pressure-resistant up to 30 bar

Internet link
Scan the QR code to access our products on the internet

G 1/4“ – Stainless steel housing

General data

Medium	liquids	**Connection**	male, M12 x 1
Sensor quality	AISI 316Ti	**Operating ranges**	Water: 1…150 cm/s Oil: 3…300 cm/s
Pressure resistance	100 bar	**Medium temperature**	-20…80 °C
Operating voltage	21…26 VDC		

Types and data – selection table

Type	Output	w	d
FCS-G1/4A4-AP8X-H1141	_⟋_, PNP	w143	d573
FCS-G1/4A4-ARX-H1140	_⟋_, Relay output	w144	d573

G 1/2“ – Stainless steel housing

General data

Medium	liquids	**Connection**	male, M12 x 1
Sensor quality	AISI 316Ti	**Operating ranges**	Water: 1…150 cm/s Oil: 3…300 cm/s
Pressure resistance	100 bar	**Medium temperature**	-20…80 °C
Operating voltage	21…26 VDC		

Types and data – selection table

Type	Output	w	d
FCS-G1/2A4-AP8X-H1141	_⟋_, PNP	w143	d574
FCS-G1/2A4-AN8X-H1141	_⟋_, NPN	w145	d574

w Wiring diagrams on page 658 d Dimension drawing on page 670 Accessories on page 560

G1/2“ – Dyflor housing

General data

Medium	liquids	**Sensor quality**	PVDF
Operating ranges	Water: 1…70 cm/s Oil: 2…100 cm/s	**Pressure resistance**	5 bar
Medium temperature	-10…80 °C	**Operating voltage**	21…26 VDC
Output	__, PNP		

Types and data – selection table

Type	Connection	w	d
FCS-G1/2DY-AP8X-H1141	male, M12 x 1	w143	d574
FCS-G1/2DY-AP8X	2 m cable	w146	d575

GL1/2“ – Stainless steel housing

General data

Medium	liquids	**Connection**	male, M12 x 1
Sensor quality	AISI 316Ti	**Operating ranges**	Water: 1…150 cm/s Oil: 3…300 cm/s
Pressure resistance	100 bar	**Medium temperature**	-20…80 °C
Operating voltage	21…26 VDC	**Output**	__, PNP

Types and data – selection table

Type	w	d
FCS-GL1/2A4-AP8X-H1141	w143	d576

N 1/2“ – Stainless steel housing

General data

Medium	liquids	**Connection**	male, M12 x 1
Sensor quality	AISI 316Ti	**Operating ranges**	Water: 1…150 cm/s Oil: 3…300 cm/s
Pressure resistance	100 bar	**Medium temperature**	-20…80 °C
Operating voltage	21…26 VDC	**Output**	__, PNP

Types and data – selection table

Type	w	d
FCS-N1/2A4-AP8X-H1141	w143	d577

Varivent – Stainless steel A4 housing

General data

Medium	liquids	**Connection**	male, M12 x 1
Sensor quality	AISI 316L	**Operating ranges**	Water: 1…150 cm/s Oil: 3…300 cm/s
Pressure resistance	10 bar	**Medium temperature**	0…80 °C
Operating voltage	21…26 VDC	**Output**	__, PNP

Types and data – selection table

Type	w	d
FCS-68A4-AP8X-H1141/D003	w143	d578

w Wiring diagrams on page 658 d Dimension drawing on page 670 Accessories on page 560

1 1/2“ TriClamp – Stainless steel housing

General data

Medium	liquids	**Connection**	male, M12 x 1
Sensor quality	AISI 316L	**Operating ranges**	Water: 1…150 cm/s Oil: 3…300 cm/s
Pressure resistance	10 bar	**Medium temperature**	0…80 °C
Operating voltage	21…26 VDC	**Output**	_\‾‾_, PNP

Types and data – selection table

Type	w	d
FCS-50A4-AP8X-H1141/D014	w143	d579

G1/4“ – Plastic housing

General data

Medium	liquids	**Connection**	male, M12 x 1
Sensor quality	AISI 316Ti	**Operating ranges**	Water: 1…150 cm/s Oil: 3…300 cm/s
Pressure resistance	100 bar	**Medium temperature**	-20…80 °C
Operating voltage	21…26 VDC	**Output**	_\‾‾_, PNP

Types and data – selection table

Type	w	d
FCS-G1/4A4P-AP8X-H1141	w143	d580

G1/2“ – Plastic housing

General data

Medium	liquids	**Sensor quality**	AISI 316Ti
Operating ranges	Water: 1…150 cm/s Oil: 3…300 cm/s	**Pressure resistance**	100 bar
Medium temperature	-20…80 °C		

Types and data – selection table

Type	Connection	Operating voltage	Output	w	d
FCS-G1/2A4P-AP8X-H1141	male, M12 x 1	21…26 VDC	, PNP	w143	d581
FCS-G1/2A4P-AP8X/L120	2 m cable	21…26 VDC	, PNP	w146	d582
FCS-G1/2A4P-VRX/24VDC	2 m cable	19.2…28.8 VDC	, Relay output	w147	d583

GL1/2“ – Plastic housing

General data

Medium temperature	-20…80 °C

Types and data – selection table

Type	Medium	Connection	Sensor quality	Operating ranges	Pressure resistance	Operating voltage	Output	w	d
FCS-GL1/2A4P-AP8X-H1141	liquids	male, M12 x 1	AISI 316Ti	Water: 1…150 cm/s Oil: 3…300 cm/s	100 bar	21…26 VDC	, PNP	w143	d584
FCS-GL1/2A4P-VRX/230VAC	liquids	2 m cable	AISI 316Ti	Water: 1…150 cm/s Oil: 3…300 cm/s	100 bar	195…264 VAC	, Relay output	w148	d585
FCS-GL1/2A2P-AP8X-H1141/A	air	male, M12 x 1	AISI 303	Air: 0.5…30 m/s	30 bar	21…26 VDC	, PNP	w143	d586
FCS-GL1/2A2P-LIX-H1141/A	air	male, M12 x 1	AISI 303	Air: 0.5…30 m/s	30 bar	21…26 VDC	Analog output, 4…20 mA	w149	d586

w Wiring diagrams on page 658 d Dimension drawing on page 670 Accessories on page 560

G 1“ – Female thread – Coupling nut – Plastic housing

General data

Medium	air	**Sensor quality**	AISI 303
Operating ranges	Air: 0.5…30 m/s	**Pressure resistance**	3 bar
Medium temperature	-20…80 °C		

Types and data – selection table

Type	Connection	Operating voltage	Output	w	d
FCS-HA2P-LIX-H1141/AL115	male, M12 x 1	21…26 VDC	Analog output, 4…20 mA	w149	d587
FCS-HA2P-VRX/230VAC/AL115	2 m cable	195…264 VAC	, Relay output	w148	d588
FCS-HA2P-VRX/24VDC/AL115 6M	6 m cable	19.2…28.8 VDC	, Relay output	w148	d588

N 1/2“ – Plastic housing

General data

Medium	liquids	**Connection**	male, M12 x 1
Sensor quality	AISI 316Ti	**Operating ranges**	Water: 1…150 cm/s Oil: 3…300 cm/s
Pressure resistance	100 bar	**Medium temperature**	-20…80 °C
Operating voltage	21…26 VDC	**Output**	, PNP

Types and data – selection table

Type	w	d
FCS-N1/2A4P-AP8X-H1141	w143	d589

Wiring diagrams on page 658 Dimension drawing on page 670 Accessories on page 560

Inline compact devices

The compact devices incorporate sensor and signal processor. They are mounted with a T-piece, a weld-on adapter or with a matching adapter block. The probe is inserted in the pipe and has direct contact with the medium. The integrated LED chain indicates the current flow state. The sensors are available either with transistor, relay switching or analog current output. They are also available with different mechanical process connections.

Features

- Inline flow sensor installed in a plastic housing, parts in contact with medium are made of stainless steel
- Sensor and signal processor enclosed in the housing
- Ideal for small pipe diameters of up to DN10
- Adjustable to flow speeds between 0.5 … 40 m/s
- Pressure-resistant up to 20 bar
- Switchpoint freely adjustable within the operating range
- LED band for flow indication
- Transistor or analog current output
- No disturbing components, free pipe profile, no pressure loss
- Fast response times within seconds

Properties

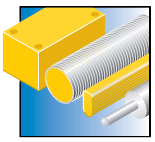

Designs
Inline flow sensors, ideal for all pipe diameters of up to DN20

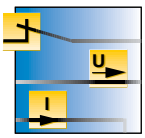

Electrical versions
PNP transistor, relay or analog current output 4…20 mA

Monitoring range
Adjustable to flow rates between 1 ml/min … 30 l/min or flow speeds between 0.5… 40 m/s (air)

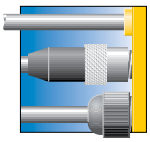

Electrical connections
M12 x 1 connectors, A-coded

Materials
Plastic housing, sensor material stainless steel

Special features
Switchpoint adjusted via potentiometer, LED chain for status indication

Internet link
Scan the QR code to access our products on the internet

G1/4“ – Male thread – Plastic housing

General data

Connection	male, M12 x 1	**Sensor quality**	AISI 316Ti
Pressure resistance	20 bar	**Medium temperature**	-20…80 °C
Operating voltage	21…26 VDC		

Types and data – selection table

Type	Medium	Operating ranges	Output	w	d
FCI-D10A4P-AP8X-H1141/A	air	Air: 0.5…40 m/s	_\‾_, PNP	w143	d590
FCI-D10A4P-LIX-H1141/A	air	Air: 0.5…40 m/s	Analog output, 4…20 mA	w149	d590
FCI-D04A4P-LIX-H1141	liquids	Flow Rate: 0,01…1 l/min	Analog output, 4…20 mA	w149	d591
FCI-D10A4P-ARX-H1140	liquids	Flow Rate: 0,1…6 l/min	_\‾_, Relay output	w144	d590

G1/2“ – Male thread – Plastic housing

General data

Medium	liquids	**Connection**	male, M12 x 1
Sensor quality	AISI 316Ti	**Operating ranges**	Flow Rate: 3…20 l/min
Pressure resistance	20 bar	**Medium temperature**	-20…80 °C
Operating voltage	21…26 VDC	**Output**	_\‾_, PNP

Types and data – selection table

Type	w	d
FCI-D15A4P-AP8X-H1141	w143	d592

w Wiring diagrams on page 658 d Dimension drawing on page 670 Accessories on page 560

G3/4“ – Male thread – Plastic housing

General data

Medium	liquids	**Connection**	male, M12 x 1
Sensor quality	AISI 316Ti	**Operating ranges**	Flow Rate: 4…30 l/min
Pressure resistance	20 bar	**Medium temperature**	-20…80 °C
Operating voltage	21…26 VDC	**Output**	_\‾‾_, PNP

Types and data – selection table

Type	w	d
FCI-D20A4P-AP8X-H1141	w143	d593

G1/4“ – Female thread – Plastic housing

General data

Medium	liquids	**Connection**	male, M12 x 1
Sensor quality	AI	**Operating ranges**	Flow Rate: 0,02…3 l/min
Pressure resistance	5 bar	**Medium temperature**	0…60 °C
Operating voltage	21…26 VDC		

Types and data – selection table

Type	Output	w	d
FCI-D06CTP-ARX-H1140	_\‾‾_, Relay output	w144	d594
FCI-D06CTP-LIX-H1141	Analog output, 4…20 mA	w149	d595
FCI-D06CTP-AP8X-H1141	_\‾‾_, PNP	w143	d594

4 mm pipe connection – Plastic housing

General data

Medium	liquids	**Connection**	male, M12 x 1
Sensor quality	AISI 316Ti	**Operating ranges**	Flow Rate: 0,001…0,2 l/min
Pressure resistance	1 bar	**Medium temperature**	0…60 °C
Operating voltage	21…26 VDC		

Types and data – selection table

Type	Output	w	d
FCI-TCD04A4P-AP8X-H1141	_⟋‾, PNP	w143	d596
FCI-TCD04A4P-LIX-H1141	Analog output, 4…20 mA	w149	d597
FCI-TCD04A4P-ARX-H1140	_⟋‾, Relay output	w144	d596

TriClamp DN 10 – Plastic housing

General data

Medium	liquids	**Connection**	male, M12 x 1
Sensor quality	AISI 316L	**Operating ranges**	Flow Rate: 0,1…6 l/min
Pressure resistance	20 bar	**Operating voltage**	21…26 VDC

Types and data – selection table

Type	Medium temperature	Output	w	d
FCI-34D10A4P-ARX-H1140	-20…80 °C	_⟋‾, Relay output	w144	d598
FCI-34D10A4P-LIX-H1141	-20…60 °C	Analog output, 4…20 mA	w149	d599
FCI-34D10A4P-AP8X-H1141	-20…80 °C	_⟋‾, PNP	w143	d598

w Wiring diagrams on page 658 d Dimension drawing on page 670 Accessories on page 560

Insertion probe

The insertion flow sensors are operated with an external signal processor. They are mounted with a T-piece, a weld-on adapter or with a matching adapter block. The probe is inserted in the pipe and has direct contact with the medium. The integrated LED chain indicates the current flow state. The sensors are available with transistor, relay or analog current output, depending on the signal processor used. They are also available with different process connections and probe lengths.

Features

- Insertion flow sensors
- Sensor and signal processor available as separate units
- Values adjusted and displayed at the signal processor
- Ideal for all pipe diameters of DN20 and larger
- Adjustable to flow speeds between 1 … 300 cm/s
- Switchpoint freely adjustable within the operating range via potentiometer
- Depending on processing unit, available with transistor, relay or analog output
- High temperature version up to 120 °C
- Chemical resistant materials

Properties

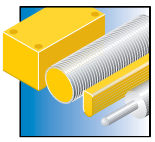

Designs
Insertion flow sensors, ideal for pipe diameters of DN20 and larger

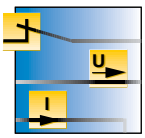

Electrical versions
Depending on processor unit: Available with transistor, relay or analog current output 4…20 mA

Monitoring range
Adjustable to flow speeds between 1 … 300 cm/s (liquids) and 0.5 … 30 m/s gaseous media (air)

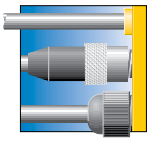

Electrical connections
Via A-coded male M12 x 1 or connection cable

Materials
Sensor material stainless steel or PTFE

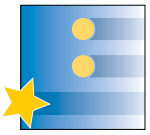

Special features
Pressure-resistant up to 100 bar, high-pressure version up to 500 bar, high-temperature version up to +120 °C

Internet link
Scan the QR code to access our products on the internet

G 1/4" – Stainless steel housing

General data

Medium	liquids	**Sensor quality**	AISI 316Ti

Types and data – selection table

Type	Connection	Operating ranges	Protection type	Pressure resistance	Medium temperature	Approvals	w	d
FCS-G1/4A4-NA-H1141	male, M12 x 1	Water: 1…150 cm/s Oil: 3…300 cm/s	–	100 bar	-20…80 °C	–	w150	d600
FCS-G1/4A4-NAEX-H1141	male, M12 x 1	Water: 1…100 cm/s Oil: 3…200 cm/s	Ex ib IIC	60 bar	-20…85 °C	Ex II 2 G	w151	d600
FCS-G1/4A4-NAEX	2 m PUR cable	Water: 1…100 cm/s Oil: 3…200 cm/s	Ex ib IIC	60 bar	-20…85 °C	Ex II 2 G	w152	d601
FCS-G1/4A4-NAEX0	2 m PUR cable	Water: 1…100 cm/s Oil: 3…200 cm/s	Ex ia IIC	60 bar	-20…60 °C	II 1/2 G	w153	d601

G 1/4" – PTFE housing

General data

Medium	liquids	**Connection**	2 m FEP cable
Sensor quality	PTFE	**Operating ranges**	Water: 1…70 cm/s Oil: 2…100 cm/s
Pressure resistance	5 bar	**Medium temperature**	-10…70 °C

Types and data – selection table

Type	w	d
FCS-G1/4T-NA	w154	d602

w Wiring diagrams on page 658 d Dimension drawing on page 670 Accessories on page 560

G 1/2“ – Stainless steel housing

General data

Medium	liquids	**Sensor quality**	AISI 316Ti

Types and data – selection table

Type	Connection	Operating ranges	Protection type	Pressure resistance	Medium temperature	Approvals	w	d
FCS-G1/2A4-NA-H1141	male, M12 x 1	Water: 1…150 cm/s Oil: 3…300 cm/s	–	100 bar	-20…80 °C	–	w150	d603
FCS-G1/2A4-NAEX-H1141	male, M12 x 1	Water: 1…100 cm/s Oil: 3…200 cm/s	Ex ib IIC	60 bar	-20…85 °C	Ex II 2 G	w151	d603
FCS-G1/2A4-NAEX0-H1141	male, M12 x 1	Water: 1…100 cm/s Oil: 3…200 cm/s	Ex ia IIC	60 bar	-20…60 °C	II 1/2 G	w151	d603
FCS-G1/2A4-NAEX0	2 m PUR cable	Water: 1…100 cm/s Oil: 3…200 cm/s	Ex ia IIC	60 bar	-20…60 °C	II 1/2 G	w153	d604

G3/4“ – Stainless steel housing

General data

Medium	liquids	**Sensor quality**	AISI 316Ti

Types and data – selection table

Type	Connection	Operating ranges	Protection type	Pressure resistance	Medium temperature	Approvals	w	d
FCS-G3/4A4-NA-H1141	male, M12 x 1	Water: 1…150 cm/s Oil: 3…300 cm/s	–	100 bar	-20…80 °C	–	w150	d605
FCS-G3/4A4-NAEX0	2 m PUR cable	Water: 1…100 cm/s Oil: 3…200 cm/s	Ex ia IIC	60 bar	-20…60 °C	II 1/2 G	w153	d606

GL1/2“ – PTFE housing

General data

Medium	liquids	**Connection**	2 m FEP cable
Sensor quality	PTFE	**Operating ranges**	Water: 1…70 cm/s Oil: 2…100 cm/s
Pressure resistance	5 bar	**Medium temperature**	-10…70 °C

Types and data – selection table

Type	w	d
FCS-GL1/2T-NA	w154	d607

GL1/2“ – Stainless steel housing

General data

Types and data – selection table

Type	Medium	Connection	Sensor quality	Operating ranges	Protection type	Pressure resistance	Medium temperature	Approvals	w	d
FCS-GL1/2A4-NA-H1141	liquids	male, M12 x 1	AISI 316Ti	Water: 1…150 cm/s Oil: 3…300 cm/s	–	100 bar	-20…80 °C	–	w150	d608
FCS-GL1/2A4-NAEX-H1141	liquids	male, M12 x 1	AISI 316Ti	Water: 1…100 cm/s Oil: 3…200 cm/s	Ex ib IIC	60 bar	-20…85 °C	Ex II 2 G	w151	d608
FCS-GL1/2A4-NAEX-H1141/A	air	male, M12 x 1	AISI 316Ti	Air: 2…20 m/s	Ex ib IIC	10 bar	-20…85 °C	Ex II 2 G	w151	d609
FCS-GL1/2A4-NAEX0-H1141/A	air	male, M12 x 1	AISI 316Ti	Air: 2…20 m/s	Ex ia IIC	10 bar	-20…60 °C	II 1/2 G	w151	d609
FCS-GL1/2A2-NA-H1141/A	air	male, M12 x 1	AISI 303	Air: 0.5…30 m/s	–	30 bar	-20…80 °C	–	w150	d609
FCS-GL1/2A2-NA/A/D100	air	2 m FEP cable	AISI 303	Air: 0.5…30 m/s	–	30 bar	10…120 °C	–	w154	d610
FCS-GL1/2A4-NAEX/A	air	2 m PUR cable	AISI 316Ti	Air: 2…20 m/s	Ex ib IIC	10 bar	-20…85 °C	Ex II 2 G	w152	d610
FCS-GL1/2A4-NAEX0/A	air	2 m PUR cable	AISI 316Ti	Air: 2…20 m/s	Ex ia IIC	10 bar	-20…60 °C	II 1/2 G	w153	d610

w Wiring diagrams on page 658 d Dimension drawing on page 670 Accessories on page 560

N 1/2“ – Stainless steel housing

General data

Medium	liquids	**Sensor quality**	AISI 316Ti

Types and data – selection table

Type	Connection	Operating ranges	Protection type	Pressure resistance	Medium temperature	Approvals	w	d
FCS-N1/2A4-NA	2 m PVC cable	Water: 1…150 cm/s Oil: 3…300 cm/s	–	100 bar	-20…80 °C	–	w154	d611
FCS-N1/2A4-NAEX-H1141	male, M12 x 1	Water: 1…100 cm/s Oil: 3…200 cm/s	Ex ib IIC	60 bar	-20…85 °C	Ex II 2 G	w151	d612

N3/4“ – Stainless steel housing

General data

Medium	liquids	**Connection**	male, M12 x 1
Sensor quality	AISI 316Ti	**Operating ranges**	Water: 1…150 cm/s Oil: 3…300 cm/s
Pressure resistance	100 bar	**Medium temperature**	-20…80 °C

Types and data – selection table

Type	w	d
FCS-N3/4A4-NA-H1141	w150	d613

DN25 – Dairy screw connection – Stainless steel

General data

Medium	liquids	**Connection**	2 m FEP cable
Sensor quality	AISI 316L	**Operating ranges**	Water: 1…150 cm/s Oil: 3…300 cm/s
Pressure resistance	10 bar	**Medium temperature**	10…120 °C

Types and data – selection table

Type	w	d
FCS-DN25A4-NA/D100	w154	d614

1 1/2“ TriClamp – Stainless steel

General data

Medium	liquids	**Connection**	2 m FEP cable
Sensor quality	AISI 316L	**Operating ranges**	Water: 1…150 cm/s Oil: 3…300 cm/s
Pressure resistance	10 bar	**Medium temperature**	10…120 °C

Types and data – selection table

Type	w	d
FCS-50A4-NA/D014	w154	d615

w Wiring diagrams on page 658 d Dimension drawing on page 670 Accessories on page 560

Varivent – Stainless steel

General data

Medium	liquids	**Connection**	2 m PVC cable
Sensor quality	AISI 316Ti	**Operating ranges**	Water: 1…150 cm/s Oil: 3…300 cm/s
Pressure resistance	10 bar	**Medium temperature**	10…120 °C

Types and data – selection table

Type	w	d
FCS-68A4-NA/D011	w154	d616

Wiring diagrams on page 658 Dimension drawing on page 670 Accessories on page 560

Inline probe

The inline flow sensors are operated with an external signal processor. For this purpose they are mounted directly in pipes. They have very fast response times and are suited for simple control tasks, such as monitoring low flow rates. The integrated LED chain indicates the current flow state. The sensors are available with transistor, relay or analog current output, depending on the signal processor used. They are also available with different mechanical process connections.

Features

- Insertion flow sensors
- Sensor and signal processor available as separate units
- Values adjusted and displayed at the signal processor
- Ideal for all pipe diameters of DN10 and larger
- Adjustable to flow rates between 5 … 900 ml/min
- Switchpoint freely adjustable within the operating range via potentiometer
- Depending on processing unit, available with transistor, relay or analog output
- Fast response times within seconds

Properties

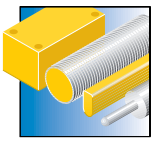

Designs
Inline flow sensors, ideal for all pipe diameters of up to DN10

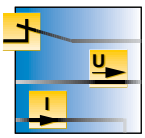

Electrical versions
Depending on processor unit: Available with transistor, relay or analog current output 4…20 mA

Monitoring range
Adjustable to flow rates between 5 … 900 ml/min

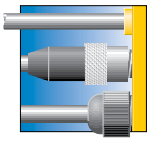

Electrical connections
Male M12 x 1, A-coded

Materials
Sensor material stainless steel

Special features
Pressure-resistant 5, 10, or 16 bar, temperature range -20…+80 °C

Internet link
Scan the QR code to access our products on the internet

M12x1.5 – Female – Stainless steel

General data

Medium	liquids	**Connection**	male, M12 x 1
Sensor quality	AISI 316Ti		

Types and data – selection table

Type	Operating ranges	Protection type	Pressure resistance	Medium temperature	Approvals	w	d
FCI-D03A4-NAEX-H1141/M12	Flow Rate: 0,01…0,15 l/min	Ex ib IIC	6 bar	-20…70 °C	Ex II 2 G	w151	d617
FCI-D03A4-NA-H1141/M12	Flow Rate: 0,005…0,15 l/min	–	10 bar	-20…80 °C	–	w150	d617

M16x1.5 – Female – Stainless steel

General data

Medium	liquids	**Connection**	male, M12 x 1
Sensor quality	AISI 316Ti		

Types and data – selection table

Type	Operating ranges	Protection type	Pressure resistance	Medium temperature	Approvals	w	d
FCI-D09A4-NAEX-H1141/M16	Flow Rate: 0,05…0,9 l/min	Ex ib IIC	6 bar	-20…70 °C	Ex II 2 G	w151	d618
FCI-D09A4-NA-H1141/M16	Flow Rate: 0,03…0,9 l/min	–	16 bar	-20…80 °C	–	w150	d618

w Wiring diagrams on page 658 d Dimension drawing on page 670 Accessories on page 560

Signal processors for flow sensors

Easy handling, high functionality and many connection possibilities are the key features of the FM-IM flow modules. All Turck flow sensors of the FCS (immersion) and FCI (inline) series can be operated unrestrictedly at the FM modules. The FCS and FCI flow sensors work according to the calorimetric measuring principle and continuously capture the flow speed and temperature of media via signal processors. The desired switchpoint is adjusted in a few steps with the new Quick-Teach function. In addition to numerous software options such as wire-break and short-circuit diagnostics, which are available via IO-Link in combination with FDT/DTM, each sensor features LEDs and a 10-segment LED band for indication of local diagnostics.

Features

- Intelligent signal processors for flow sensors
- Many display and diagnostic functions
- Integrated IO-Link interface
- Easy adjustment directly at the signal processor or software supported via IO-Link (FDT/DTM)
- Easy to handle and parametrize via Quick-Teach
- Additional monitoring of temperature
- Transistor, relay or analog output 4…20 mA
- Compact design, requires little space

Properties

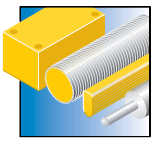

Design
The flow modules are designed for DIN rail mounting.

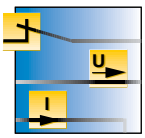

Electrical versions
They are available as types with standard PNP transistor output, relay output and analog 4…20 mA current output.

Monitoring range
The monitoring range depends on the type of flow sensor connected.

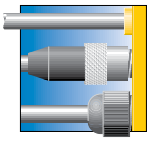

Electrical connections
The sensors are powered via terminal strips. The modules additionally feature a jack plug for IO-Link communication.

Materials
The rugged IP20 housing is made of polycarbonate (ABS).

Special features
The functionality is increased through IO-Link communicability as well as through temperature monitoring and the new Quick-Teach function for adjustment of switchpoints.

Internet link
Scan the QR code to access our products on the internet

FM – Flow modules

General data

Communication via	IO-Link	**Connection**	Terminal block
Dimensions	27 x 89 x 110 mm		

Types and data – selection table

Type	Switching element function	Temperature monitoring	Error monitoring	Flow monitoring	Operating voltage	Output	w	d
FM-IM-2UPLI63X	4…20 mA	transistor output	transistor output	Current output	20…30 VDC	4 … 20 mA, Analog output	–	–
FM-IM-3UP63X	NO/NC programmable	transistor output	transistor output	transistor output	20…30 VDC	⊥⌐/_⌐ program-mable, PNP/NPN	–	–
FM-IM-3UR38X	NO/NC programmable	relay output	relay output	relay output	20…250 VAC / 20…125 VDC	⊥⌐/_⌐ program-mable, Relay output	–	–

w Wiring diagrams on page 658 d Dimension drawing on page 670 Accessories on page 560

Signal processors for Ex flow sensors

Easy handling, high functionality and many connection possibilities are the key features of the new FMX-IM flow modules. All Turck Ex flow sensors of the FCS (immersion) and FCI (inline) series can be operated unrestrictedly at the FMX modules. The FCS and FCI flow sensors work according to the calorimetric measuring principle and continuously capture the flow speed and temperature of media via signal processors. The desired switchpoint is adjusted in a few steps with the new Quick-Teach function. In addition to numerous software options such as wire-break and short-circuit diagnostics, which are available via IO-Link or HART in combination with FDT/DTM, each sensor features LEDs and a 10-segment LED band for local diagnostics.

Features

- Intelligent signal processors for Ex flow sensors
- Many display and diagnostic functions
- Integrated IO-Link or HART interface
- Easy adjustment directly at the signal processor or software supported via IO-Link or HART (FDT/DTM).
- Easy to handle and parametrize via Quick-Teach
- Additional monitoring of temperature
- Transistor, relay or analog output 4…20 mA
- Compact design, requires little space

Properties

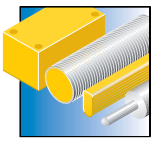

Design
The flow modules are designed for DIN rail mounting.

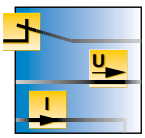

Electrical versions
They are available as types with standard PNP transistor output, relay output and analog 4…20 mA current output.

Monitoring range
The monitoring range depends on the type of flow sensor connected.

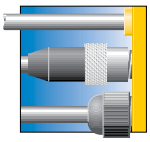

Electrical connections
The sensors are powered via terminal strips. The modules additionally feature a jack plug for IO-Link or HART communication.

Materials
The rugged IP20 housing is made of polycarbonate (ABS).

Special features
The functionality is increased through IO-Link and HART communicability as well as through temperature monitoring and the new QuickTeach function.

Internet link
Scan the QR code to access our products on the internet

FMX - Flow Module

General data

Connection	Terminal block	**Protection type**	Ex II (1) G [Ex ia Ga] IIC resp. II (1) D [Ex ia Da] IIIC
Approvals	Ex II 1 G Ex II 1 D	**Dimensions**	27 x 89 x 110 mm

Types and data – selection table

Type	Switching element function	Temperature monitoring	Error monitoring	Communication via	Flow monitoring	Operating voltage	Output	w	d
FMX-IM-2UPLI63X	4…20 mA	transistor output	transistor output	HART	Current output	20…30 VDC	4 … 20 mA, Analog output	–	–
FMX-IM-3UP63X	NO/NC programmable	transistor output	transistor output	IO-Link	transistor output	20…30 VDC	programmable, PNP/NPN	–	–
FMX-IM-3UR38X	NO/NC programmable	relay output	relay output	IO-Link	relay output	20…250 VAC / 20…125 VDC	programmable, Relay output	–	–

w Wiring diagrams on page 658 d Dimension drawing on page 670 Accessories on page 560

Flow meters

Flow meters - Continuous and precise measurement of flow rates

In order to guarantee smooth operation and consistent quality, many processes require constant in and outflow of liquid or gaseous media. Flow sensors measure the speed and flow meters continuously measure the volume per time unit relative to the defined pipe cross-section.

Flow measurement requires high repeatability and accuracy. TURCK sensors apply different methods for electronic measurement of flow rates, such as the calorimetric, the magnetic-inductive as well as the vortex principle.

TURCK flow meters indicate the flow rate via display and via an analog current output. The output signal can either be analog or binary, depending on whether continuous flow or a limit value is to be monitored. The programmable devices are characterized by a long service life and are thus almost maintenance-free.

The FTCI flow meters operate according to the thermodynamic principle. They are favourably priced and work reliably. Due to the different thermal conductivity of media, the devices are preferably applied in water or water-glycol mixtures. Short response times within seconds and stable values displayed even under the influence of strong temperature fluctuations, make these sensors particularly suited for flow rate monitoring in cooling circuits.

FCMI flow meters operate according to the magnetic-inductive principle. They measure the flow rate of many low-conductive liquids. Blistering and non-abrasive solids have only little influence on the measurement. The operating range between 0.2 and 80 l/min is ideal for all applications with small to medium flow rates.

FCVI vortex flow meters are insensitive to pressure and temperature changes and are thus suited for applications with high demands on measuring accuracy. Flow rates between 2 and 20 l/min are detected with an accuracy of 2 % f.s. The extremely responsive and temperature-stable flow meter is preferably applied in water return and coolant circuits.

Our strenghts – Your advantages

Measuring and monitoring of flow rates

Flow monitoring of media plays an important role in many applications of factory and process automation. The monitoring of coolant circuits, run-dry protection of pumps or the flow control of exhaust air ducts and air conditioning systems are some examples. In order to detect critical changes in flow and to indicate them to a control unit, electronic flow sensors are increasingly applied.

High repeatability

Unvarying processes and smooth operation require a constant inflow of media. Flow rate monitoring in such processes requires high repeatability. TURCK flow meters indicate the flow rate via display and analog current output. The output signal can either be analog or binary, depending on whether continuous flow or a limit value is to be monitored.

High-precision measurement – Compact design

Inline flow meters made by TURCK are highly precise operating systems incorporated in a compact housing. They are easily integrated in existing line configurations and are space saving alternatives for new constructions. Not only coolant circuits and temperature cycles are precisely monitored but also dosage intervals, like in water purification systems. Limit value monitoring as well as an analog linearized swichting output are available for these tasks.

Hans Turck GmbH & Co. KG ▪ Tel. +49 208 49 52-0 ▪ Fax +49 208 49 52-264

our advantages

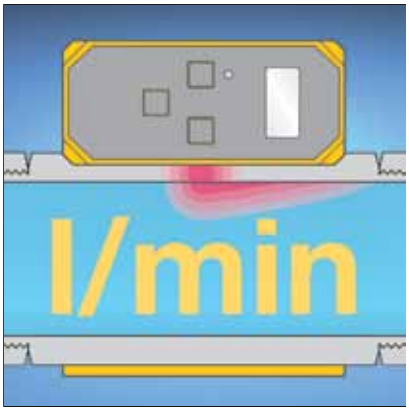

Calorimetric flow meter

The FTCI flow meter working on the calorimetric principle measures and monitors either the media temperature or the flow rate. The FTCI is therefore suited for many different applications. Flow rates between 1 and 40 l/min are detected with a repeatability of 10 % f.s. Short response times within seconds and stable values displayed even under the influence of strong temperature fluctuations, make these sensors particularly suited for flow rate monitoring in coolant circuits.

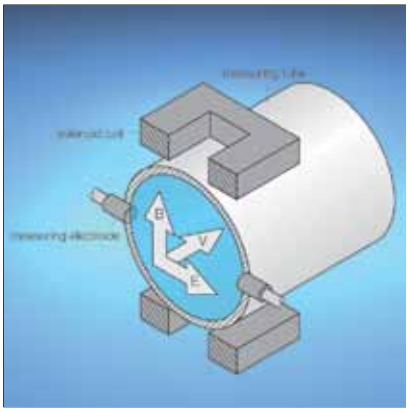

Magnetic-inductive flow meter

The magnetic-inductive flow meter FCMI measures flow rates of low-conductive liquids. The FCMI is therefore suited for many different applications. Outstanding features of the magnetic-inductive flow meter are a high measuring range dynamics and a measuring accuracy of 2% f.s. The operating range between 0.2 and 80 l/min is ideal for all applications with small to medium flow rates.

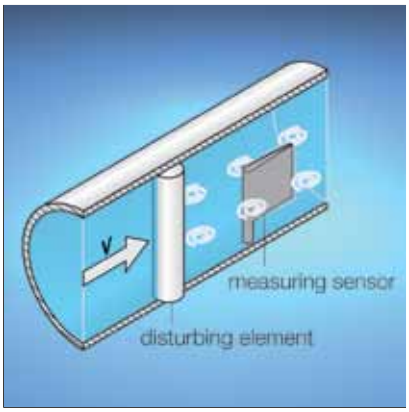

Vortex flow meters

The FCVI vortex flow meter works on the principle of the Karman vortex street. It is thus especially suited for high-precision measurement of water flow rates. Flow rates between 2 and 20 l/min are detected with a measuring accuracy of 2% f.s. Short response times within seconds and stable values displayed even under the influence of strong temperature fluctuations, make these sensors particularly suited for flow rate monitoring in return and cooling circuits.

Our strenghts – Your advantages

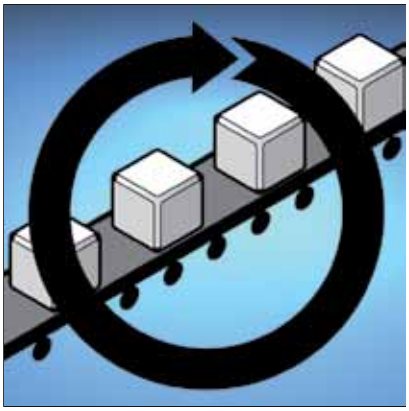

High system availability

The inline flow meters proof their outstanding reliability especially in rough environments of factory and process automation, This is guaranteed through excellent EMC properties and a protection rating of IP67. An application-optimized housing, durable mounting aids and a well legible display are the main features considered in the design. Flow meters thus withstand the special ambient conditions of many applications without any problems. Use these benefits to optimize your production processes.

Maximum planning freedom

Many solutions are implementable with only a few device types, numerous connection possibilities, simple mounting and flexible mounting aids. From polling of single switchpoints, over analog output signals, to a well legible display, even from a greater distance. Profit from the extensive standard product range of TURCK flow meters providing more flexibility to your application.

User-friendly operation

The inline flow meters have two front panel buttons to make adjustments. For comfortable menu navigation and flow rate reading [l/min], the devices also feature a 3-digit 7-segment display. The programming functions are code protected. Without the access code, only the stored values of the switchpoints and parameters are displayed. All these features in combination with a simply structured menu help to reduce commissioning times and to improve process safety.

Hans Turck GmbH & Co. KG ▪ Tel. +49 208 49 52-0 ▪ Fax +49 208 49 52-264

ur advantages

Easy mounting

The inline flow meters are built in pipelines. The pipe may be connected directly via cutting ring fitting or adapter. The flow meters can be mounted on a baseplate via a threaded bushing located at the bottom of the housing. For frontal mounting of the sensor, screw the baseplate first on the housing.

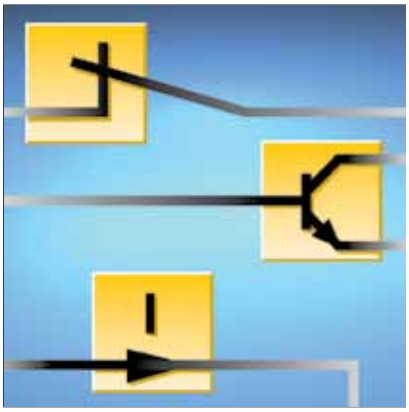

Many different output signals

If output signals need to be further processed via control or PLC , the flow sensors provide a standard switching and also an analog 4…20 mA output. Initial and end value are adjusted in the programming mode. Upon error in the measurement system, 2 mA are provided at the output. If the flow direction is opposed to the mounting direction, the flow rate is displayed as a negative value and the output current remains stable at 4 mA. The measuring range shown in the display is limited to -9.9 l/min in this mounting position.

High servicability

Thanks to the many application possibilities, user-friendly operation and adjustment, the well legible 3-digit 7-segment display and last but not least the excellent repeatability, inline flow meters offer calculable advantages.

Type code

FCMI	–	10D08	DYA4P	–	LIU	P	8	X	–	H1	1	4	1

FCMI	Functional principle	–	10D08	DYA4P	Design	–	LIU	P	8	X	Electrical version	–

Flow meters

FTCI	calorimetric, inline with temperature monitoring
FCMI	magnetic-inductive, inline
FCVI	Vortex, inline

Materials

A4	stainless steel A4 (1.4404 or 1.4571)
DY	PVDF (Dyflor)
P	plastic housing

Mechanical connection

10D08	compression fittings for smooth barrel, outer Ø 10 mm
10D10	compression fittings for smooth barrel, outer Ø 10 mm
10R09	compression fittings for smooth barrel, outer Ø 10 mm
15D15	compression fittings for smooth barrel, outer Ø 15 mm
18D15	compression fittings for smooth barrel, outer Ø 18 mm

Indications

…X	number of LEDs or multicolor LED

Voltage range

8	19.2…28.8 VDC

Output range

P	PNP

Output function

LI	analog output (I)
LIU	NO/NC programmable, analog + current + PNP
2U	NO/NC programmable, 2 x PNP

Hans Turck GmbH & Co. KG ▪ Tel. +49 208 49 52-0 ▪ Fax +49 208 49 52-264

H1	1	4	1	Electrical connection

Assignment
1 M12 x 1, connector (standard)

Number of contacts
4 4 contacts

Connector type
1 straight

Connector type
H1 connector M12 x 1

Designs and variants

	Medium	Operating ranges	Mechanical connection	Medium temperature	Material in contact with medium	Pressure resistance	Housing material	Page
10 mm cutting ring fitting	Liquids	Flow Rate: 1...10 l/min	compression ferrule fittings for pipes Ø 10 x 1 (EN 10305-1)	-10...90 °C	V4A (1.4571)	20 bar	PBT	379
15 mm cutting ring fitting	Liquids	Flow Rate: 2...20 l/min Flow Rate: 2...25 l/min Flow Rate: 1...10 l/min	compression ferrule fittings for pipes Ø 15 x 1.5 (EN 10305-1) NPT ½" compression ferrule fittings for pipes Ø 10 x 1 (EN 10305-1)	-10...90 °C	V4A (1.4571)	20 bar	PBT	379
18 mm cutting ring fitting	Liquids	Flow Rate: 4...40 l/min Flow Rate: 10...100 l/min	compression ferrule fittings for pipes Ø 18 x 1.5 (EN 10305-1) NPT ¾"	-10...90 °C	V4A (1.4571)	20 bar	PBT	380
10 mm cutting ring fitting	Liquids	Flow Rate: 0...40 l/min	compression ferrule fittings for pipes Ø 10 x 1 (EN 10305-1)	5...60 °C	V4A (1.4571)/PVDF	10 bar	PBT	383
15 mm cutting ring fitting	Liquids	Flow Rate: 0...80 l/min	compression ferrule fittings for pipes Ø 15 x 1.5 (EN 10305-1)	5...60 °C	V4A (1.4571)/PVDF	10 bar	PBT	383
G 3/4" – Male	Liquids	Flow Rate: 0...75 l/min	¾" swagelok	5...60 °C	V4A (1.4571)/PVDF	10 bar	PBT	384
10 mm cutting ring fitting	Liquids	Flow Rate: 2...20 l/min	compression ferrule fittings for pipes Ø 10 x 1 (EN 10305-1)	5...60 °C	V4A (1.4571)/PVDF	10 bar	PBT	391

Hans Turck GmbH & Co. KG ▪ Tel. +49 208 49 52-0 ▪ Fax +49 208 49 52-264

ts and variants

Flow meters for water and water-glycol mixtures

The FTCIs are particularly suited for flow rate monitoring in coolant circuits. Short response times within seconds and stable values displayed even under the influence of strong temperature fluctuations, make these sensors particularly suited for automotive welding lines. A 3-digit 7-segment display indicates the flow rate and the cooling capacity continuously.
To prevent icing, industrial air conditioning systems use water-glycol mixtures in secondary circuits. In order to provide a reliable indication of flow rate values, the glycol amount is adjusted at the flow meter. The devices are programmable via three pushbuttons at the front. Either the measured value or the sensor parameters are displayed, depending on the adjustments made.

Features

- Measurement of small to medium water flow rates and water-glycol mixtures
- Ideal for small pipe diameters of up to DN20
- Temperature monitoring
- Switchpoint freely adjustable within the operating range
- No disturbing built-ins, free pipe profile, no pressure loss
- Fast response times within seconds
- Adjustable to flow rates between 1 … 40 l/min
- Repeatability < 10 % f.s.
- Two transistor outputs or one transistor and one analog current output

Properties

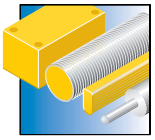

Designs
Rugged plastic housing with display, ideal for small pipe diameters of up to DN20

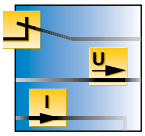

Electrical versions
Two PNP transistor outputs or one PNP transistor and one linear analog current output 4…20 mA

Measuring ranges
Adjustable to flow rates between 1 … 40 l/min, repeatability < 10 % f.s.

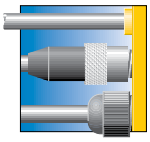

Electrical connections
Connected via male M12 x 1, A-coded

Materials
PBT housing, sensor made of stainless steel 1.4571 and FKM O-ring

Special features
Programmable switchpoint, output, hysteresis, switch ON/OFF delay, glycol amount, flow rate correction, averaging and access code

Internet link
Scan the QR code to access our products on the internet

Hans Turck GmbH & Co. KG ▪ Tel. +49 208 49 52-0 ▪ Fax +49 208 49 52-264

10 mm cutting ring fitting

General data

Medium	liquids	**Protection class**	IP65
Connection	male, M12 x 1	**Sensor quality**	AISI 316Ti
Operating ranges	Flow Rate: 1…10 l/min	**Mechanical connection**	compression ferrule fittings for pipes Ø 10 x 1 (EN10305-1)
Pressure resistance	20 bar	**Medium temperature**	-10…90 °C
Operating voltage	21…26 VDC	**Housing material**	PBT
Function	Inline sensor with integrated processor		

Types and data – selection table

Type	Output	w	d
FTCI-10D10A4P-LIUP8X-H1141	programmable, PNP/analog output, 4…20 mA	w155	d619
FTCI-10D10A4P-2UP8X-H1141	programmable, 2 x PNP	w156	d620

15 mm cutting ring fitting

General data

Medium	liquids	**Connection**	male, M12 x 1
Sensor quality	AISI 316Ti	**Pressure resistance**	20 bar
Medium temperature	-10…90 °C	**Operating voltage**	21…26 VDC
Housing material	PBT	**Function**	Inline sensor with integrated processor

Types and data – selection table

Type	Protection class	Operating ranges	Mechanical connection	Output	w	d
FTCI-15D15A4P-LIUP8X-H1141	IP65	Flow Rate: 2…20 l/min	compression ferrule fittings for pipes Ø 15 x 1.5 (EN10305-1)	programmable, PNP/analog output, 4…20 mA	w155	d621
FTCI-15D15A4P-2UP8X-H1141	IP65	Flow Rate: 2…20 l/min	compression ferrule fittings for pipes Ø 15 x 1.5 (EN10305-1)	programmable, 2 x PNP	w156	d622
FTCI-N1/2D15A4P-2LIX-H1140/D224	IP67	Flow Rate: 2…25 l/min	NPT ½"	4 … 20 mA, Analog output, 4…20 mA	w157	d623
FTCI-10D10A4P-2LIX-H1141	IP65	Flow Rate: 1…10 l/min	compression ferrule fittings for pipes Ø 10 x 1 (EN10305-1)	Analog output, 4…20 mA	w158	d619

w Wiring diagrams on page 658 d Dimension drawing on page 670 Accessories on page 560

18 mm cutting ring fitting

General data

Medium	liquids	**Connection**	male, M12 x 1
Sensor quality	AISI 316Ti	**Pressure resistance**	20 bar
Medium temperature	-10…90 °C	**Operating voltage**	21…26 VDC
Housing material	PBT	**Function**	Inline sensor with integrated processor

Types and data – selection table

Type	Protection class	Operating ranges	Mechanical connection	Output	w	d
FTCI-18D15A4P-LIUP8X-H1141	IP65	Flow Rate: 4…40 l/min	compression ferrule fittings for pipes Ø 18 x 1.5 (EN10305-1)	programmable, PNP/analog output, 4…20 mA	w155	d624
FTCI-18D15A4P-2UP8X-H1141	IP65	Flow Rate: 4…40 l/min	compression ferrule fittings for pipes Ø 18 x 1.5 (EN10305-1)	programmable, 2 x PNP	w156	d625
FTCI-N3/4D19A4P-2LIX-H1140/D224	IP67	Flow Rate: 10…100 l/min	NPT ¾″	4 … 20 mA, Analog output, 4…20 mA	w157	d623

Wiring diagrams on page 658 Dimension drawing on page 670 Accessories on page 560

Compact devices for electrically conductive media

The magnetic-inductive flow meter FCMI is designed for continuous measurement of many conductive liquids. The operating range covers small to medium flow rates. Operating on the magnetic-inductive principle, they are applied in many different areas to measure quantities and dosages of many different media. The strengths of the magnetic-inductive flow meters include a high measuring range dynamics and excellent repeatability. A 3-digit 7-segment display indicates the flow rate continuously. The devices are programmable via three pushbuttons at the front. Either the measured value or the sensor parameters are displayed, depending on the adjustments made.

Features

- Measurement of small to medium flow rates of conductive liquids > 20 µS/cm
- Ideal for small pipe diamters of up to DN15
- Switchpoint freely adjustable within the operating range
- No disturbing built-ins, free pipe profile, no pressure loss
- Fast response times within seconds
- Adjustable to flow rates between 1 … 80 l/min
- Repeatability < 20 % f.s.
- Transistor and analog current output

Properties

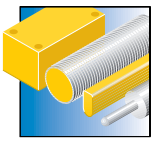

Designs
Rugged plastic housing with display, ideal for small pipe diamters of up to DN15

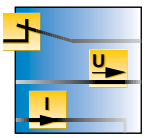

Electrical versions
Configurable PNP transistor output, linear analog current output 4…20 mA

Measuring ranges
Adjustable to flow rates between 1 … 80 l/min, repeatability < 2 % f.s.

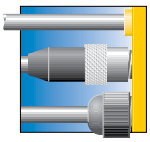

Electrical connections
Connected via male M12 x 1, A-coded

Materials
PBT housing, sensor material PVDF and stainless steel 1.4571

Special features
Programmable switchpoint, output, hysteresis, switch ON/OFF delay, averaging and access code

Internet link
Scan the QR code to access our products on the internet

10 mm cutting ring fitting

General data

Medium	liquids	**Protection class**	IP65
Connection	male, M12 x 1	**Sensor quality**	V4A (1.4571)/PVDF
Operating ranges	Flow Rate: 0…40 l/min	**Mechanical connection**	compression ferrule fittings for pipes Ø 10 x 1 (EN10305-1)
Pressure resistance	10 bar	**Medium temperature**	5…60 °C
Operating voltage	21…26 VDC	**Output**	⊣⊢/⊣⊢ programmable, PNP/ analog output, 4…20 mA
Housing material	PBT	**Function**	Inline sensor with integrated processor

Types and data – selection table

Type	w	d
FCMI-10D08DYA4P-LIUP8X-H1141	w155	d619

15 mm cutting ring fitting

General data

Medium	liquids	**Protection class**	IP65
Connection	male, M12 x 1	**Sensor quality**	V4A (1.4571)/PVDF
Operating ranges	Flow Rate: 0…80 l/min	**Mechanical connection**	compression ferrule fittings for pipes Ø 15 x 1.5 (EN10305-1)
Pressure resistance	10 bar	**Medium temperature**	5…60 °C
Operating voltage	21…26 VDC	**Output**	⊣⊢/⊣⊢ programmable, PNP/ analog output, 4…20 mA
Housing material	PBT	**Function**	Inline sensor with integrated processor

Types and data – selection table

Type	w	d
FCMI-15D12DYA4P-LIUP8X-H1141	w155	d621

w Wiring diagrams on page 658 d Dimension drawing on page 670 Accessories on page 560

G 3/4“ – Male

General data

Medium	liquids	**Protection class**	IP65
Connection	male, M12 x 1	**Sensor quality**	V4A (1.4571)/PVDF
Operating ranges	Flow Rate: 0…75 l/min	**Mechanical connection**	¾″ swagelok
Pressure resistance	10 bar	**Medium temperature**	5…60 °C
Operating voltage	21…26 VDC	**Output**	programmable, PNP/ analog output, 4…20 mA
Housing material	PBT	**Function**	Inline sensor with integrated processor

Types and data – selection table

Type	w	d
FCMI-3/4D12DYA4P-LIUP8X-H1141	w155	d626

Wiring diagrams on page 658 Dimension drawing on page 670 Accessories on page 560

Flow meters for water applications

The Vortex flow meter FCVI is especially suited for applications with high demands on linearity and repeatability. The devices detect flow rates between 2 and 20 l/min with a repeatability of 2 % f.s. Short response times within seconds and stable values displayed even under the influence of strong temperature fluctuations, make the FCVI particularly suited for flow rate monitoring of process water and cooling water circuits. A 3-digit 7-segment display indicates the flow rate continuously. The devices are programmable via three pushbuttons at the front. Either the measured value or the sensor parameters are displayed, depending on the adjustments made.

Features

- Measurement of small to medium water flow rates
- Ideal for small pipe diameters of up to DN10
- Switchpoint freely adjustable within the operating range
- Fast response times within seconds
- Adjustable to flow rates between 2 … 20 l/min
- Repeatability < 4 % f.s.
- Transistor and analog current output

Properties

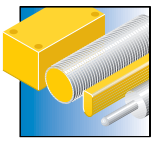

Designs
Robust plastic housing with display, ideal for small pipe diamters of up to DN10

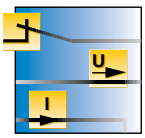

Electrical versions
Configurable PNP transistor output, linear analog current output 4…20 mA

Measuring ranges
Adjustable to flow rates between 2 … 20 l/min, repeatability < 2 % f.s.

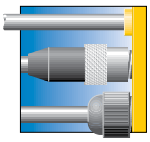

Electrical connections
Connected via male M12 x 1, A-coded

Materials
PBT housing, sensor made of PVDF and stainless steel 1.4571

Special features
Programmable switchpoint, output, hysteresis, switch ON/OFF delay, averaging and access code

Internet link
Scan the QR code to access our products on the internet

Hans Turck GmbH & Co. KG ▪ Tel. +49 208 49 52-0 ▪ Fax +49 208 49 52-264

10 mm cutting ring fitting

General data			
Medium	liquids	**Protection class**	IP65
Connection	male, M12 x 1	**Sensor quality**	V4A (1.4571)/PVDF
Operating ranges	Flow Rate: 2…20 l/min	**Mechanical connection**	compression ferrule fittings for pipes Ø 10 x 1 (EN10305-1)
Pressure resistance	10 bar	**Medium temperature**	5…60 °C
Operating voltage	21…26 VDC	**Output**	programmable, PNP/ analog output, 4…20 mA
Housing material	PBT	**Function**	Inline sensor with integrated processor

Types and data – selection table

Type	w	d
FCVI-10R09DYA4P-LIUP8X-H1141	w155	d619

w Wiring diagrams on page 658 d Dimension drawing on page 670 Accessories on page 560

Pressure sensors

Pressure sensors - Reliability and flexibility on highest levels

Pressure is most commonly measured and monitored in applications of process control and manufacturing industries. Equally complex are the demands on pressure sensors:
Whether applied in standard systems or exposed to extreme temperature changes, vibration, impacts or aggressive media: Each application requires a perfect solution in every respect. High-quality materials, flexible process connections, easy programming as well as highest accuracy and many display functions are therefore essential standards of electronic pressure measurement.
Pressure is not measured as a general physical property; a pressure value has rather a special reference. The positive and negative pressure is defined as the difference between the measured pressure and the atmospheric pressure. Therefore, most measuring devices require a reference terminal open to the atmosphere. This type of pressure is also described as relative pressure or gauge.
The absolute pressure however is related to vacuum. In actual practice, the reference side of the measuring device is hermetically sealed. The pressure and temperature of gases are mainly regulated this way in industrial applications. With regard to differential pressure, the process pressure is connected to the reference side of the device. Filling levels, flow rates and leaks are thus detected in systems.

Most electronic pressure sensors transduce the measured pressure in deformation force which is subsequently converted into an electrical signal by strain gauges, piezo-crystals, piezoresistive, capacitive or inductive sensors.
TURCK pressure sensors detect and measure absolute, relative and reference pressures of liquids, gases and air in nearly all industrial applications and under the most diverse conditions. The PK series is especially designed for pneumatic and vacuum applications. Rugged, compact and at the same time lightweight designed, these sensors are made for handling and automation systems.
Ideally suited for demanding hydraulic and pneumatic systems are pressure sensors of the PS series . The devices are incorporated in a stainless steel housing and operate with a ceramic measuring cell. Different versions with switching and analog output as well as 4-digit 7-segment display are user friendly and easily integrated in your system. Open standards such as VDMA menu guide and IO-Link are also supported.
The PT series features pressure transmitters in rugged cylindrical housings made of stainless steel, without display and with linear current or voltage output.

Pressure sensors – PS series

The full range of performance

The sensors of this series cover all important pressure ranges from -1 … +600 bar with an accuracy of 0.5% f.s.. Bar, psi and further 12 standard pressure units can be selected for measurement. The 4-digit 7-segment LED display indicates the pressure status and makes programming more comfortable. The devices are available with two transistor switching outputs or with one switching and one analog output. High EMC immunity and protection classes IP67/IP69K guarantee reliable operation, even under harsh conditions. All sensors are equipped with an IO-Link interface. Flexible integration and diagnostics is guaranteed, making the PS series a cost-effective solution.

Clearly visible display

The 4-digit 7-segment display indicates the applied pressure during normal operation and is easily programmed. The sloped display allows the sensors to be mounted on top or in front according to the position of the process connection. The read direction can be reversed by 180° degrees via software. Values are thus perfectly readable, even if the sensor is mounted horizontally.

Flexible mounting

Inclined by 45° the display is well readable from any position and even from a great distance. Horizontal mounting is also possible. The read direction can be reversed by 180° degrees via software. After locking the pressure connection, the PS500 can be moved in any desired position because it is freely rotatable. Once the final position is attained, the device is fixed in place with a second coupling nut. Special mounting aids are not required. With a diameter of only 34 mm, several sensors can be mounted side by side in confined spaces.

Hans Turck GmbH & Co. KG ▪ Tel. +49 208 49 52-0 ▪ Fax +49 208 49 52-264

PS series

Easy programming

Thanks to the user friendly menu guide, parameters such as switch and release points, output type, analog range and various special functions are easily taught. The PS sensors are programmed with the buttons MODE and SET. Tools are not needed to view the parameter values. To avoid accidental changes of programmed data, the ENTER button for storing the values is recessed. The button can only be pressed with a pointed object, such as a ball pen for example.

Rugged design

The sensor body, process and electrical connection of the PS series are made of stainless steel. Based on proven ceramic component technology, these shock and vibration proof sensors operate safely and reliably even in harsh environments. All sensors feature excellent EMC properties and are IP67 or IP69K protected. Even in an undesired exceptional situation, safety comes first: Should the measuring cell burst, a patented medium-stop system prevents the discharge of liquids up to a pressure of 2400 bar, depending on the medium temperature.

High system availability

The PS series excels in excellent EMC properties and is IP67 rated. Sensor body, pressure and electrical connection are made of stainless steel and are therefore highly reliable and rugged. Should the measuring cell burst, a patented medium-stop system prevents the discharge of liquids up to a pressure of 2400 bar, depending on the medium temperature.

- Excellent EMC properties, highly interference immune
- Protection against mechanical impacts thanks to the rugged design
- Short down-times through high system availability and short replacement times

Pressure sensors – PS series

Extremely service-friendly

Due to the extremely flexible mounting options, user-friendly operation and high accuracy, the sensors offer you distinct and calculable advantages.

- Upper sensor part rotatable by 360° (PS500 series)
- Minimum maintenance effort through streamlined product range.
- Simple operation via two finger-operated pushbuttons
- Failsafe operation through a recessed ENTER button for the storage of values

Efficient standardization

A single sensor replaces many conventional types. Even if a PS sensor is applied to measure only half of its nominal pressure, it will operate highly accurate, as required by the machine engineering industry. As a result, sensor inventories can be reduced significantly. A reduced inventory pays off for you:

- Only a few sensors are needed to cover a large range of applications
- Reduced training effort due to simple and failsafe operation
- High system safety achieved through a rugged design

Maximum planning freedom

Due to many solutions achievable with only a few devices, the new sensors of the PS series offer maximum planning freedom, while minimizing the mounting efforts.

- Upper sensor part rotatable by 360°
- Display rotatable by 180°
- Sloped display by 45°
- Bright illuminated LED display legible from a greater distance
- Highest accuracy, 0.5 % f.s.
- Two switching outputs or a combination of switching and analog output
- Communication via IO-Link
- VDMA menu guide (optional)

Hans Turck GmbH & Co. KG ▪ Tel. +49 208 49 52-0 ▪ Fax +49 208 49 52-264

PS series

Type code

PS	010V	–	5	01	–	LI2U	PN	8	X	–	H1	1	4	1

PS 010V Functional principle – **5 01** Mechanical version – **LI2U PN 8 X** Electrical version –

Measuring range

01VR	-1…0 bar g [1]
001R	0…1 bar g [1]
001V	-1…1 bar g [1]
003V	-1…2,5 bar g [1]
010V	-1…10 bar g
016V	-1…16 bar g
025V	-1…25 bar g
040V	-1…40 bar g
100R	0…100 bar g
250R	0…250 bar g
400R	0…400 bar g
600R	0…600 bar g [2]
001A	0…1 bar a [1] [3]
003A	0…2,5 bar a [1] [3]
010A	0…10 bar a [1] [3]
016A	0…16 bar a [1] [3]
025A	0…25 bar a [1] [3]

Functional principle

PS	pressure sensor

Process connection

01	G1/4" female thread
02	1/4"-18NPT female thread
03	1/4"-18NPT male thread
04	G1/4" male thread
05	7/16" UNF male thread (only for design 6)
06	G3/4" male thread front-flush (only for design 6)
07	1 1/2" Tri-Clamp (only for design 6)
08	G1/2" male thread manometer connection (only for design 5)
09	G1/2" male thread front-flush (only for design 6)
10	R 1/4" male thread
11	R 1/4" female thread

Design

3	adjustable, with display, non-rotatable sensor
5	adjustable, with display, rotatable sensor
6	adjustable, with display, non-rotatable sensor, diaphragm seal with front-flush

Indication

X...	LED display

Voltage range

8	15(18)…30 VDC

Output mode

PN	PNP/NPN

Output function

2U	output 1: switching output output 2: switching output
LUU	output 1: switching output output 2: voltage output
LI2U	output 1: switching output output 2: current/switching output, reprogrammable

[1] Not available for design/pressure connection 609
[2] Not available for design 600
[3] Not available for design 300

g = Relative pressure
a = Absolute pressure

Hans Turck GmbH & Co. KG ▪ Tel. +49 208 49 52-0 ▪ Fax +49 208 49 52-264

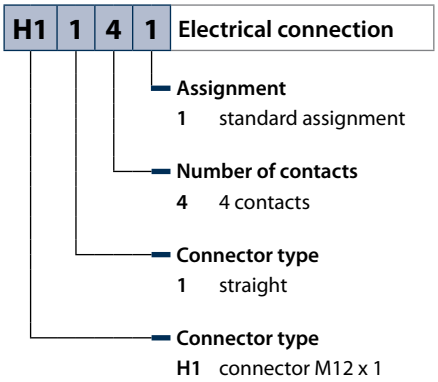
H1 1 4 1 Electrical connection
Assignment
1 standard assignment
Number of contacts
4 4 contacts
Connector type
1 straight
Connector type
H1 connector M12 x 1

Designs and variants

	Mechanical connection	Connection	Output 1	Output 2	Page
G1/4“ – Female thread – 2 switching outputs	G ¼" female thread	male, M12 x 1	Switching output or IO-Link mode	switching output	399
G1/4“ – Female thread – Switching and analog output	G ¼" female thread	male, M12 x 1	Switching output or IO-Link mode	Analog- or switching output analog output	399
G1/4“ – Male thread – 2 switching outputs	G ¼" male thread NPT ¼" - 18 male thread	male, M12 x 1	Switching output or IO-Link mode	switching output	400
G1/4“ – Male thread – Switching and analog output	G ¼" male thread NPT ¼" - 18 male thread	male, M12 x 1	Switching output or IO-Link mode	Analog- or switching output analog output	401
G1/4“ – Female thread – 2 switching outputs	G ¼" female thread	male, M12 x 1	Switching output or IO-Link mode	switching output	403
G1/4“ – Female thread – Switching and analog output	G ¼" female thread	male, M12 x 1	Switching output or IO-Link mode	Analog- or switching output analog output	403

Hans Turck GmbH & Co. KG ▪ Tel. +49 208 49 52-0 ▪ Fax +49 208 49 52-264

and variants

	Mechanical connection	Connection	Output 1	Output 2	Page
G1/4“ – Male thread – 2 switching outputs	G ¼" male thread NPT ¼" - 18 male thread 7/16-20 UNF	male, M12 x 1	Switching output or IO-Link mode	switching output	404
G1/4“ – Male thread – Switching and analog output	G ¼" male thread NPT ¼" - 18 male thread 7/16-20 UNF	male, M12 x 1	Switching output or IO-Link mode	Analog- or switching output analog output	405
G3/4“ – Front-flush diaphragm – 2 switching outputs	G ¾" front-flush	male, M12 x 1	Switching output or IO-Link mode	switching output	409
G3/4“ – Front-flush diaphragm – Switching and analog output	G ¾" front-flush	male, M12 x 1	Switching output or IO-Link mode	Analog- or switching output	409
G3/4“ – Front-flush diaphragm – Switching and analog output	G ¾" front-flush	male, M12 x 1	Switching output or IO-Link mode	analog output	410
G1/2“ – Front-flush diaphragm – 2 switching outputs	G ½" front-flush	male, M12 x 1	Switching output or IO-Link mode	switching output	411

PS300 series – For hydraulic applications

The PS300 series has been designed especially for hydraulic applications. The devices operate with a ceramic measuring cell. Available are versions with two switching outputs or one switching and one analog output. IO-Link communication is integrated as a standard. Highest process safety is achieved through a stainless steel housing, fully potted electronics and protection class IP69K.

Features

- IO-Link capable
- Measuring range -1…600 bar
- Fully potted stainless steel housing
- Protection class IP69K
- VDMA menu guide (optional)
- Permanent display of pressure (bar, psi, kPa, MPa, misc)
- Highest pressure resistance

Properties

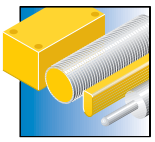

Designs
Cylindrical design, non-rotatable, with display

Measuring ranges
-1…600 bar rel.

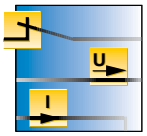

Electrical versions
IO-Link capable, 2-channel, switching, current or voltage output

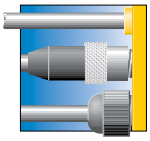

Electrical connections
Male M12 x 1, 4-pin

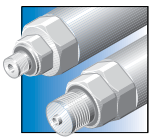

Connectivity
G1/4“, 1/4“ NPT, R1/4“ male and female thread

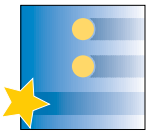

Special features
Failsafe 3-key operation, VDMA menu guide (optional), IP69K, fully potted sensor

Internet link
Scan the QR code to access our products on the internet

Hans Turck GmbH & Co. KG ▪ Tel. +49 208 49 52-0 ▪ Fax +49 208 49 52-264

G1/4" – Female thread – 2 switching outputs

General data

Output 1	Switching output or IO-Link mode	**Output 2**	switching output
Protection class	IP67 / IP69K	**Connection**	male, M12 x 1
Mechanical connection	G ¼" female thread	**Medium temperature**	-40…85 °C
Operating voltage	18…30 VDC	**Response time**	3 ms
Housing material	1.4305 (AISI 303)/PC	**Switching frequency**	180 Hz
Accuracy switching output	0.5 % v. E. BSL		

Types and data – selection table

Type	Relative pressure	Admissible overpressure	w	d
PS01VR-301-2UPN8X-H1141	-1…0 bar rel.	5,5 bar	w159	d627
PS001R-301-2UPN8X-H1141	0…1 bar rel.	5,5 bar	w159	d627
PS001V-301-2UPN8X-H1141	-1…1 bar rel.	5,5 bar	w159	d627
PS003V-301-2UPN8X-H1141	-1…2.5 bar rel.	12 bar	w159	d627
PS010V-301-2UPN8X-H1141	-1…10 bar rel.	50 bar	w159	d627
PS016V-301-2UPN8X-H1141	-1…16 bar rel.	80 bar	w159	d627
PS025V-301-2UPN8X-H1141	-1…25 bar rel.	120 bar	w159	d627
PS040V-301-2UPN8X-H1141	-1…40 bar rel.	200 bar	w159	d627
PS100R-301-2UPN8X-H1141	0…100 bar rel.	450 bar	w159	d627
PS250R-301-2UPN8X-H1141	0…250 bar rel.	600 bar	w159	d627
PS400R-301-2UPN8X-H1141	0…400 bar rel.	800 bar	w159	d627
PS600R-301-2UPN8X-H1141	0…600 bar rel.	900 bar	w159	d627

G1/4" – Female thread – Switching and analog output

General data

Output 1	Switching output or IO-Link mode	**Protection class**	IP67 / IP69K
Connection	male, M12 x 1	**Mechanical connection**	G ¼" female thread
Medium temperature	-40…85 °C	**Operating voltage**	18…30 VDC
Response time	3 ms	**Housing material**	1.4305 (AISI 303)/PC
Switching frequency	180 Hz	**Accuracy switching output**	0.5 % v. E. BSL
Accuracy LHR analog output	0.5 % of final value BSL		

Types and data – selection table

Type	Relative pressure	Admissible overpressure	Output 2	Operating range	w	d
PS01VR-301-LI2UPN8X-H1141	-1…0 bar rel.	5,5 bar	Analog or switching output	4…20/ 0…20 mA (3-wire)	w160	d627
PS001R-301-LI2UPN8X-H1141	0…1 bar rel.	5,5 bar	Analog or switching output	4…20/ 0…20 mA (3-wire)	w160	d627
PS001V-301-LI2UPN8X-H1141	-1…1 bar rel.	5,5 bar	Analog or switching output	4…20/ 0…20 mA (3-wire)	w160	d627
PS003V-301-LI2UPN8X-H1141	-1…2.5 bar rel.	12 bar	Analog or switching output	4…20/ 0…20 mA (3-wire)	w160	d627
PS010V-301-LI2UPN8X-H1141	-1…10 bar rel.	50 bar	Analog or switching output	4…20/ 0…20 mA (3-wire)	w160	d627
PS016V-301-LI2UPN8X-H1141	-1…16 bar rel.	80 bar	Analog or switching output	4…20/ 0…20 mA (3-wire)	w160	d627
PS025V-301-LI2UPN8X-H1141	-1…25 bar rel.	120 bar	Analog or switching output	4…20/ 0…20 mA (3-wire)	w160	d627

Table continues on the next page…

… Table starts on previous page

Type	Relative pressure	Admissible overpressure	Output 2	Operating range	w	d
PS040V-301-LI2UPN8X-H1141	-1…40 bar rel.	200 bar	Analog or switching output	4…20/ 0…20 mA (3-wire)	w160	d627
PS100R-301-LI2UPN8X-H1141	0…100 bar rel.	450 bar	Analog or switching output	4…20/ 0…20 mA (3-wire)	w160	d627
PS250R-301-LI2UPN8X-H1141	0…250 bar rel.	600 bar	Analog or switching output	4…20/ 0…20 mA (3-wire)	w160	d627
PS400R-301-LI2UPN8X-H1141	0…400 bar rel.	800 bar	Analog or switching output	4…20/ 0…20 mA (3-wire)	w160	d627
PS600R-301-LI2UPN8X-H1141	0…600 bar rel.	900 bar	Analog or switching output	4…20/ 0…20 mA (3-wire)	w160	d627
PS01VR-301-LUUPN8X-H1141	-1…0 bar rel.	5,5 bar	analog output	0…10 V, 0…5 V (3-wire)	w161	d627
PS001R-301-LUUPN8X-H1141	0…1 bar rel.	5,5 bar	analog output	0…10 V, 0…5 V (3-wire)	w161	d627
PS001V-301-LUUPN8X-H1141	-1…1 bar rel.	5,5 bar	analog output	0…10 V, 0…5 V (3-wire)	w161	d627
PS003V-301-LUUPN8X-H1141	-1…2.5 bar rel.	12 bar	analog output	0…10 V, 0…5 V (3-wire)	w161	d627
PS010V-301-LUUPN8X-H1141	-1…10 bar rel.	50 bar	analog output	0…10 V, 0…5 V (3-wire)	w161	d627
PS016V-301-LUUPN8X-H1141	-1…16 bar rel.	80 bar	analog output	0…10 V, 0…5 V (3-wire)	w161	d627
PS025V-301-LUUPN8X-H1141	-1…25 bar rel.	120 bar	analog output	0…10 V, 0…5 V (3-wire)	w161	d627
PS040V-301-LUUPN8X-H1141	-1…40 bar rel.	200 bar	analog output	0…10 V, 0…5 V (3-wire)	w161	d627
PS100R-301-LUUPN8X-H1141	0…100 bar rel.	450 bar	analog output	0…10 V, 0…5 V (3-wire)	w161	d627
PS250R-301-LUUPN8X-H1141	0…250 bar rel.	600 bar	analog output	0…10 V, 0…5 V (3-wire)	w161	d627
PS400R-301-LUUPN8X-H1141	0…400 bar rel.	800 bar	analog output	0…10 V, 0…5 V (3-wire)	w161	d627
PS600R-301-LUUPN8X-H1141	0…600 bar rel.	900 bar	analog output	0…10 V, 0…5 V (3-wire)	w161	d627

G1/4“ – Male thread – 2 switching outputs

General data

Output 1	Switching output or IO-Link mode	**Output 2**	switching output
Protection class	IP67 / IP69K	**Connection**	male, M12 x 1
Mechanical connection	G ¼” male thread	**Medium temperature**	-40…85 °C
Operating voltage	18…30 VDC	**Response time**	3 ms
Housing material	1.4305 (AISI 303)/PC	**Switching frequency**	180 Hz
Accuracy switching output	0.5 % v. E. BSL		

Types and data – selection table

Type	Relative pressure	Admissible overpressure	w	d
PS01VR-304-2UPN8X-H1141	-1…0 bar rel.	5,5 bar	w159	d628
PS001R-304-2UPN8X-H1141	0…1 bar rel.	5,5 bar	w159	d628
PS001V-304-2UPN8X-H1141	-1…1 bar rel.	5,5 bar	w159	d628
PS003V-304-2UPN8X-H1141	-1…2.5 bar rel.	12 bar	w159	d628
PS010V-304-2UPN8X-H1141	-1…10 bar rel.	50 bar	w159	d628
PS016V-304-2UPN8X-H1141	-1…16 bar rel.	80 bar	w159	d628
PS025V-304-2UPN8X-H1141	-1…25 bar rel.	120 bar	w159	d628
PS040V-304-2UPN8X-H1141	-1…40 bar rel.	200 bar	w159	d628
PS100R-304-2UPN8X-H1141	0…100 bar rel.	450 bar	w159	d628
PS250R-304-2UPN8X-H1141	0…250 bar rel.	600 bar	w159	d628
PS400R-304-2UPN8X-H1141	0…400 bar rel.	800 bar	w159	d628
PS600R-304-2UPN8X-H1141	0…600 bar rel.	900 bar	w159	d628

Many different types available, also with barrel, see type code

G1/4“ – Male thread – Switching and analog output

General data

Output 1	Switching output or IO-Link mode	**Protection class**	IP67 / IP69K
Connection	male, M12 x 1	**Mechanical connection**	G ¼” male thread
Medium temperature	-40…85 °C	**Operating voltage**	18…30 VDC
Response time	3 ms	**Housing material**	1.4305 (AISI 303)/PC
Switching frequency	180 Hz	**Accuracy switching output**	0.5 % v. E. BSL
Accuracy LHR analog output	0.5 % of final value BSL		

Types and data – selection table

Type	Relative pressure	Admissible overpressure	Output 2	Operating range	w	d
PS01VR-304-LI2UPN8X-H1141	-1…0 bar rel.	5,5 bar	Analog or switching output	4…20/ 0…20 mA (3-wire)	w160	d628
PS001R-304-LI2UPN8X-H1141	0…1 bar rel.	5,5 bar	Analog or switching output	4…20/ 0…20 mA (3-wire)	w160	d628
PS001V-304-LI2UPN8X-H1141	-1…1 bar rel.	5,5 bar	Analog or switching output	4…20/ 0…20 mA (3-wire)	w160	d628
PS003V-304-LI2UPN8X-H1141	-1…2.5 bar rel.	12 bar	Analog or switching output	4…20/ 0…20 mA (3-wire)	w160	d628
PS010V-304-LI2UPN8X-H1141	-1…10 bar rel.	50 bar	Analog or switching output	4…20/ 0…20 mA (3-wire)	w160	d628
PS016V-304-LI2UPN8X-H1141	-1…16 bar rel.	80 bar	Analog or switching output	4…20/ 0…20 mA (3-wire)	w160	d628
PS025V-304-LI2UPN8X-H1141	-1…25 bar rel.	120 bar	Analog or switching output	4…20/ 0…20 mA (3-wire)	w160	d628
PS040V-304-LI2UPN8X-H1141	-1…40 bar rel.	200 bar	Analog or switching output	4…20/ 0…20 mA (3-wire)	w160	d628
PS100R-304-LI2UPN8X-H1141	0…100 bar rel.	450 bar	Analog or switching output	4…20/ 0…20 mA (3-wire)	w160	d628
PS250R-304-LI2UPN8X-H1141	0…250 bar rel.	600 bar	Analog or switching output	4…20/ 0…20 mA (3-wire)	w160	d628
PS400R-304-LI2UPN8X-H1141	0…400 bar rel.	800 bar	Analog or switching output	4…20/ 0…20 mA (3-wire)	w160	d628
PS600R-304-LI2UPN8X-H1141	0…600 bar rel.	900 bar	Analog or switching output	4…20/ 0…20 mA (3-wire)	w160	d628
PS01VR-304-LUUPN8X-H1141	-1…0 bar rel.	5,5 bar	analog output	0…10 V, 0…5 V (3-wire)	w161	d628
PS001R-304-LUUPN8X-H1141	0…1 bar rel.	5,5 bar	analog output	0…10 V, 0…5 V (3-wire)	w161	d628
PS001V-304-LUUPN8X-H1141	-1…1 bar rel.	5,5 bar	analog output	0…10 V, 0…5 V (3-wire)	w161	d628
PS003V-304-LUUPN8X-H1141	-1…2.5 bar rel.	12 bar	analog output	0…10 V, 0…5 V (3-wire)	w161	d628
PS010V-304-LUUPN8X-H1141	-1…10 bar rel.	50 bar	analog output	0…10 V, 0…5 V (3-wire)	w161	d628
PS016V-304-LUUPN8X-H1141	-1…16 bar rel.	80 bar	analog output	0…10 V, 0…5 V (3-wire)	w161	d628
PS025V-304-LUUPN8X-H1141	-1…25 bar rel.	120 bar	analog output	0…10 V, 0…5 V (3-wire)	w161	d628
PS040V-304-LUUPN8X-H1141	-1…40 bar rel.	200 bar	analog output	0…10 V, 0…5 V (3-wire)	w161	d628
PS100R-304-LUUPN8X-H1141	0…100 bar rel.	450 bar	analog output	0…10 V, 0…5 V (3-wire)	w161	d628
PS250R-304-LUUPN8X-H1141	0…250 bar rel.	600 bar	analog output	0…10 V, 0…5 V (3-wire)	w161	d628
PS400R-304-LUUPN8X-H1141	0…400 bar rel.	800 bar	analog output	0…10 V, 0…5 V (3-wire)	w161	d628
PS600R-304-LUUPN8X-H1141	0…600 bar rel.	900 bar	analog output	0…10 V, 0…5 V (3-wire)	w161	d628

Many different types available, also with barrel, see type code

w Wiring diagrams on page 658 d Dimension drawing on page 670 Accessories on page 560

PS500 series – For hydraulic and pneumatic applications

The PS500 sensors operate with ceramic measuring cells. Through pressure exerted on the ceramic substrate a pressure-proportional signal is created and then electronically processed. Depending on the sensor type used, the processed signal is either provided at a switching or an analog output. IO-Link communication is integrated as a standard. A rotatable sensor body, a large number of available thread types and an accuracy of 0.5% f.s. guarantee highest mounting flexibility and secure connection to the process.

Features

- IO-Link capable
- Sensor rotatable by 360°
- 4-digit 7-segment display
- Measuring range -1…600 bar relative pressure
- Measuring range 0…25 bar absolute pressure
- Stainless steel housing
- Permanent display of pressure (bar, psi, kPa, MPa, misc)

Properties

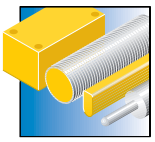

Designs
Cylindrical design, rotatable by 360°, with display

Measuring ranges
-1…600 bar relative and 0…25 bar absolute

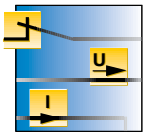

Electrical versions
IO-Link capable, 2-channel, switching, current or voltage output

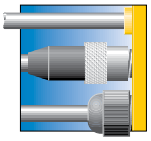

Electrical connections
Male M12 x 1, 4-pin

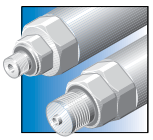

Connectivity
G1/4“, 1/4“ NPT, R1/4“ male and female thread, 7/16“ UNF and G1/2“ male thread

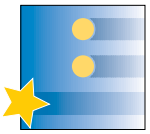

Special features
Failsafe 3-key operation, VDMA menu guide (optional), IP67

Internet link
Scan the QR code to access our products on the internet

G1/4“ – Female thread – 2 switching outputs

General data

Output 1	Switching output or IO-Link mode	**Output 2**	switching output
Protection class	IP67	**Connection**	male, M12 x 1
Mechanical connection	G ¼” female thread	**Medium temperature**	-40…85 °C
Operating voltage	18…30 VDC	**Response time**	3 ms
Housing material	1.4305 (AISI 303)/PC	**Switching frequency**	180 Hz
Accuracy switching output	0.5 % v. E. BSL		

Types and data – selection table

Type	Relative pressure	Absolute pressure	Admissible overpressure	w	d
PS001R-501-2UPN8X-H1141	0…1 bar rel.	–	3 bar	w159	d629
PS001V-501-2UPN8X-H1141	-1…1 bar rel.	–	3 bar	w159	d629
PS003V-501-2UPN8X-H1141	-1…2.5 bar rel.	–	7 bar	w159	d629
PS010V-501-2UPN8X-H1141	-1…10 bar rel.	–	25 bar	w159	d629
PS016V-501-2UPN8X-H1141	-1…16 bar rel.	–	40 bar	w159	d629
PS01VR-501-2UPN8X-H1141	-1…0 bar rel.	–	3 bar	w159	d629
PS025V-501-2UPN8X-H1141	-1…25 bar rel.	–	65 bar	w159	d629
PS040V-501-2UPN8X-H1141	-1…40 bar rel.	–	100 bar	w159	d629
PS100R-501-2UPN8X-H1141	0…100 bar rel.	–	250 bar	w159	d629
PS250R-501-2UPN8X-H1141	0…250 bar rel.	–	625 bar	w159	d629
PS400R-501-2UPN8X-H1141	0…400 bar rel.	–	900 bar	w159	d629
PS600R-501-2UPN8X-H1141	0…600 bar rel.	–	900 bar	w159	d629
PS001A-501-2UPN8X-H1141	–	0…1 bar abs.	3 bar	w159	d629
PS003A-501-2UPN8X-H1141	–	0…2.5 bar abs.	7 bar	w159	d629
PS010A-501-2UPN8X-H1141	–	0…10 bar abs.	25 bar	w159	d629
PS016A-501-2UPN8X-H1141	–	0…16 bar abs.	40 bar	w159	d629
PS025A-501-2UPN8X-H1141	–	0…25 bar abs.	65 bar	w159	d629

G1/4“ – Female thread – Switching and analog output

General data

Output 1	Switching output or IO-Link mode	**Protection class**	IP67
Connection	male, M12 x 1	**Mechanical connection**	G ¼” female thread
Medium temperature	-40…85 °C	**Operating voltage**	18…30 VDC
Response time	3 ms	**Housing material**	1.4305 (AISI 303)/PC
Switching frequency	180 Hz	**Accuracy switching output**	0.5 % v. E. BSL
Accuracy LHR analog output	0.5 % of final value BSL		

Types and data – selection table

Type	Relative pressure	Absolute pres.	Admissible overpres.	Output 2	Operating range	w	d
PS01VR-501-LI2UPN8X-H1141	-1…0 bar rel.	–	3 bar	Analog or switching output	4…20/ 0…20 mA (3-wire)	w160	d629
PS001R-501-LI2UPN8X-H1141	0…1 bar rel.	–	3 bar	Analog or switching output	4…20/ 0…20 mA (3-wire)	w160	d629

Table continues on the next page…

… Table starts on previous page

Type	Relative pressure	Absolute pres.	Admissible overpres.	Output 2	Operating range	w	d
PS001V-501-LI2UPN8X-H1141	-1…1 bar rel.	–	3 bar	Analog or switching output	4…20/ 0…20 mA (3-wire)	w160	d629
PS003V-501-LI2UPN8X-H1141	-1…2.5 bar rel.	–	7 bar	Analog or switching output	4…20/ 0…20 mA (3-wire)	w160	d629
PS010V-501-LI2UPN8X-H1141	-1…10 bar rel.	–	25 bar	Analog or switching output	4…20/ 0…20 mA (3-wire)	w160	d629
PS016V-501-LI2UPN8X-H1141	-1…16 bar rel.	–	40 bar	Analog or switching output	4…20/ 0…20 mA (3-wire)	w160	d629
PS025V-501-LI2UPN8X-H1141	-1…25 bar rel.	–	65 bar	Analog or switching output	4…20/ 0…20 mA (3-wire)	w160	d629
PS040V-501-LI2UPN8X-H1141	-1…40 bar rel.	–	100 bar	Analog or switching output	4…20/ 0…20 mA (3-wire)	w160	d629
PS100R-501-LI2UPN8X-H1141	0…100 bar rel.	–	250 bar	Analog or switching output	4…20/ 0…20 mA (3-wire)	w160	d629
PS250R-501-LI2UPN8X-H1141	0…250 bar rel.	–	625 bar	Analog or switching output	4…20/ 0…20 mA (3-wire)	w160	d629
PS400R-501-LI2UPN8X-H1141	0…400 bar rel.	–	900 bar	Analog or switching output	4…20/ 0…20 mA (3-wire)	w160	d629
PS600R-501-LI2UPN8X-H1141	0…600 bar rel.	–	900 bar	Analog or switching output	4…20/ 0…20 mA (3-wire)	w160	d629
PS001A-501-LI2UPN8X-H1141	–	0…1 bar abs.	3 bar	Analog or switching output	4…20/ 0…20 mA (3-wire)	w160	d629
PS003A-501-LI2UPN8X-H1141	–	0…2.5 bar abs.	7 bar	Analog or switching output	4…20/ 0…20 mA (3-wire)	w160	d629
PS010A-501-LI2UPN8X-H1141	–	0…10 bar abs.	25 bar	Analog or switching output	4…20/ 0…20 mA (3-wire)	w160	d629
PS016A-501-LI2UPN8X-H1141	–	0…16 bar abs.	40 bar	Analog or switching output	4…20/ 0…20 mA (3-wire)	w160	d629
PS025A-501-LI2UPN8X-H1141	–	0…25 bar abs.	65 bar	Analog or switching output	4…20/ 0…20 mA (3-wire)	w160	d629
PS01VR-501-LUUPN8X-H1141	-1…0 bar rel.	–	3 bar	analog output	0…10 V, 0…5 V (3-wire)	w161	d629
PS001R-501-LUUPN8X-H1141	0…1 bar rel.	–	3 bar	analog output	0…10 V, 0…5 V (3-wire)	w161	d629
PS001V-501-LUUPN8X-H1141	-1…1 bar rel.	–	3 bar	analog output	0…10 V, 0…5 V (3-wire)	w161	d629
PS003V-501-LUUPN8X-H1141	-1…2.5 bar rel.	–	7 bar	analog output	0…10 V, 0…5 V (3-wire)	w161	d629
PS010V-501-LUUPN8X-H1141	-1…10 bar rel.	–	25 bar	analog output	0…10 V, 0…5 V (3-wire)	w161	d629
PS016V-501-LUUPN8X-H1141	-1…16 bar rel.	–	40 bar	analog output	0…10 V, 0…5 V (3-wire)	w161	d629
PS025V-501-LUUPN8X-H1141	-1…25 bar rel.	–	65 bar	analog output	0…10 V, 0…5 V (3-wire)	w161	d629
PS040V-501-LUUPN8X-H1141	-1…40 bar rel.	–	100 bar	analog output	0…10 V, 0…5 V (3-wire)	w161	d629
PS100R-501-LUUPN8X-H1141	0…100 bar rel.	–	250 bar	analog output	0…10 V, 0…5 V (3-wire)	w161	d629
PS250R-501-LUUPN8X-H1141	0…250 bar rel.	–	625 bar	analog output	0…10 V, 0…5 V (3-wire)	w161	d629
PS400R-501-LUUPN8X-H1141	0…400 bar rel.	–	900 bar	analog output	0…10 V, 0…5 V (3-wire)	w161	d629
PS600R-501-LUUPN8X-H1141	0…600 bar rel.	–	900 bar	analog output	0…10 V, 0…5 V (3-wire)	w161	d629
PS001A-501-LUUPN8X-H1141	–	0…1 bar abs.	3 bar	analog output	0…10 V, 0…5 V (3-wire)	w161	d629
PS003A-501-LUUPN8X-H1141	–	0…2.5 bar abs.	7 bar	analog output	0…10 V, 0…5 V (3-wire)	w161	d629
PS010A-501-LUUPN8X-H1141	–	0…10 bar abs.	25 bar	analog output	0…10 V, 0…5 V (3-wire)	w161	d629
PS016A-501-LUUPN8X-H1141	–	0…16 bar abs.	40 bar	analog output	0…10 V, 0…5 V (3-wire)	w161	d629
PS025A-501-LUUPN8X-H1141	–	0…25 bar abs.	65 bar	analog output	0…10 V, 0…5 V (3-wire)	w161	d629

G1/4“ – Male thread – 2 switching outputs

General data

Output 1	Switching output or IO-Link mode	**Output 2**	switching output
Protection class	IP67	**Connection**	male, M12 x 1
Mechanical connection	G ¼” male thread	**Medium temperature**	-40…85 °C
Operating voltage	18…30 VDC	**Response time**	3 ms
Housing material	1.4305 (AISI 303)/PC	**Switching frequency**	180 Hz
Accuracy switching output	0.5 % v. E. BSL		

Types and data – selection table

Type	Relative pressure	Absolute pressure	Admissible overpressure	w	d
PS01VR-504-2UPN8X-H1141	-1…0 bar rel.	–	3 bar	w159	d630
PS001R-504-2UPN8X-H1141	0…1 bar rel.	–	3 bar	w159	d630

Table continues on the next page…

… Table starts on previous page

Type	Relative pressure	Absolute pressure	Admissible overpressure	w	d
PS001V-504-2UPN8X-H1141	-1…1 bar rel.	–	3 bar	w159	d630
PS003V-504-2UPN8X-H1141	-1…2.5 bar rel.	–	7 bar	w159	d630
PS010V-504-2UPN8X-H1141	-1…10 bar rel.	–	25 bar	w159	d630
PS016V-504-2UPN8X-H1141	-1…16 bar rel.	–	40 bar	w159	d630
PS025V-504-2UPN8X-H1141	-1…25 bar rel.	–	65 bar	w159	d630
PS040V-504-2UPN8X-H1141	-1…40 bar rel.	–	100 bar	w159	d630
PS100R-504-2UPN8X-H1141	0…100 bar rel.	–	250 bar	w159	d630
PS250R-504-2UPN8X-H1141	0…250 bar rel.	–	625 bar	w159	d630
PS400R-504-2UPN8X-H1141	0…400 bar rel.	–	900 bar	w159	d630
PS600R-504-2UPN8X-H1141	0…600 bar rel.	–	900 bar	w159	d630
PS001A-504-2UPN8X-H1141	–	0…1 bar abs.	3 bar	w159	d630
PS003A-504-2UPN8X-H1141	–	0…2.5 bar abs.	7 bar	w159	d630
PS010A-504-2UPN8X-H1141	–	0…10 bar abs.	25 bar	w159	d630
PS016A-504-2UPN8X-H1141	–	0…16 bar abs.	40 bar	w159	d630
PS025A-504-2UPN8X-H1141	–	0…25 bar abs.	65 bar	w159	d630

Many different types available, also with barrel, see type code

G1/4“ – Male thread – Switching and analog output

General data

Output 1	Switching output or IO-Link mode	**Protection class**	IP67
Connection	male, M12 x 1	**Mechanical connection**	G ¼” male thread
Medium temperature	-40…85 °C	**Operating voltage**	18…30 VDC
Response time	3 ms	**Housing material**	1.4305 (AISI 303)/PC
Switching frequency	180 Hz	**Accuracy switching output**	0.5 % v. E. BSL
Accuracy LHR analog output	0.5 % of final value BSL		

Types and data – selection table

Type	Relative pres.	Absolute pres.	Admissible overpres.	Output 2	Operating range	w	d
PS01VR-504-LI2UPN8X-H1141	-1…0 bar rel.	–	3 bar	Analog or switching output	4…20/ 0…20 mA (3-wire)	w160	d630
PS001R-504-LI2UPN8X-H1141	0…1 bar rel.	–	3 bar	Analog or switching output	4…20/ 0…20 mA (3-wire)	w160	d630
PS001V-504-LI2UPN8X-H1141	-1…1 bar rel.	–	3 bar	Analog or switching output	4…20/ 0…20 mA (3-wire)	w160	d630
PS003V-504-LI2UPN8X-H1141	-1…2.5 bar rel.	–	7 bar	Analog or switching output	4…20/ 0…20 mA (3-wire)	w160	d630
PS010V-504-LI2UPN8X-H1141	-1…10 bar rel.	–	25 bar	Analog or switching output	4…20/ 0…20 mA (3-wire)	w160	d630
PS016V-504-LI2UPN8X-H1141	-1…16 bar rel.	–	40 bar	Analog or switching output	4…20/ 0…20 mA (3-wire)	w160	d630
PS025V-504-LI2UPN8X-H1141	-1…25 bar rel.	–	65 bar	Analog or switching output	4…20/ 0…20 mA (3-wire)	w160	d630
PS040V-504-LI2UPN8X-H1141	-1…40 bar rel.	–	100 bar	Analog or switching output	4…20/ 0…20 mA (3-wire)	w160	d630

Table continues on the next page…

w Wiring diagrams on page 658 d Dimension drawing on page 670 Accessories on page 560

… Table starts on previous page

Type	Relative pres.	Absolute pres.	Admissible overpres.	Output 2	Operating range	w	d
PS100R-504-LI2UPN8X-H1141	0…100 bar rel.	–	250 bar	Analog or switching output	4…20/ 0…20 mA (3-wire)	w160	d630
PS250R-504-LI2UPN8X-H1141	0…250 bar rel.	–	625 bar	Analog or switching output	4…20/ 0…20 mA (3-wire)	w160	d630
PS400R-504-LI2UPN8X-H1141	0…400 bar rel.	–	900 bar	Analog or switching output	4…20/ 0…20 mA (3-wire)	w160	d630
PS600R-504-LI2UPN8X-H1141	0…600 bar rel.	–	900 bar	Analog or switching output	4…20/ 0…20 mA (3-wire)	w160	d630
PS001A-504-LI2UPN8X-H1141	–	0…1 bar abs.	3 bar	Analog or switching output	4…20/ 0…20 mA (3-wire)	w160	d630
PS003A-504-LI2UPN8X-H1141	–	0…2.5 bar abs.	7 bar	Analog or switching output	4…20/ 0…20 mA (3-wire)	w160	d630
PS010A-504-LI2UPN8X-H1141	–	0…10 bar abs.	25 bar	Analog or switching output	4…20/ 0…20 mA (3-wire)	w160	d630
PS016A-504-LI2UPN8X-H1141	–	0…16 bar abs.	40 bar	Analog or switching output	4…20/ 0…20 mA (3-wire)	w160	d630
PS025A-504-LI2UPN8X-H1141	–	0…25 bar abs.	65 bar	Analog or switching output	4…20/ 0…20 mA (3-wire)	w160	d630
PS01VR-504-LUUPN8X-H1141	-1…0 bar rel.	–	3 bar	analog output	0…10 V, 0…5 V (3-wire)	w161	d630
PS001R-504-LUUPN8X-H1141	0…1 bar rel.	–	3 bar	analog output	0…10 V, 0…5 V (3-wire)	w161	d630
PS001V-504-LUUPN8X-H1141	-1…1 bar rel.	–	3 bar	analog output	0…10 V, 0…5 V (3-wire)	w161	d630
PS003V-504-LUUPN8X-H1141	-1…2.5 bar rel.	–	7 bar	analog output	0…10 V, 0…5 V (3-wire)	w161	d630

Many different types available, also with barrel, see type code

Wiring diagrams on page 658 Dimension drawing on page 670 Accessories on page 560

PS600 series – For viscous media or contamination

The PS600 series operates with a front-flush mounted diaphragm system. Pressure exerted on the stainless steel diaphragm is transmitted via the filling medium to the measuring cell's ceramic base. Depending on the sensor type used, the processed signal is either provided at a switching or an analog output. IO-Link is standard. Thanks to a front-flush or dead-space free diaphragm and an accuracy of 0.5% f.s., the sensors can be securely connected to the process in many different ways.

Features

- IO-Link capable
- Front-flush and dead-space free process connections
- 4-digit 7-segment display
- Measuring range -1…400 bar relative pressure
- Measuring range 0…25 bar absolute pressure
- Stainless steel housing
- Permanent display of pressure (bar, psi, kPa, MPa, misc)

Properties

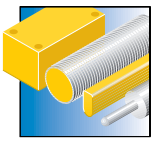

Designs
Cylindrical design, non-rotatable, with display

Measuring ranges
-1…600 bar rel.

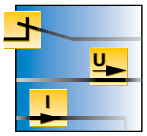

Electrical versions
IO-Link capable, 2-channel, switching, current or voltage output

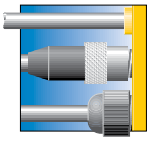

Electrical connections
Male M12 x 1, 4-pin

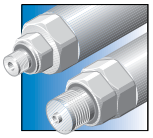

Connectivity
G1/2" and G3/4" front-flush process connections

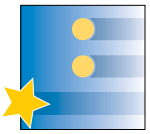

Special features
Failsafe 3-key operation, VDMA menu guide (optional), IP67, fully potted sensor

Internet link
Scan the QR code to access our products on the internet

Hans Turck GmbH & Co. KG ▪ Tel. +49 208 49 52-0 ▪ Fax +49 208 49 52-264

G3/4“ – Front-flush diaphragm – 2 switching outputs

General data

Output 1	Switching output or IO-Link mode	**Output 2**	switching output
Protection class	IP67	**Connection**	male, M12 x 1
Mechanical connection	G ¾″ front-flush	**Medium temperature**	-10…85 °C
Operating voltage	18…30 VDC	**Response time**	3 ms
Housing material	1.4305 (AISI 303)/PC	**Switching frequency**	180 Hz
Accuracy switching output	0.5 % v. E. BSL		

Types and data – selection table

Type	Relative pressure	Admissible overpressure	w	d
PS01VR-606-2UPN8X-H1141	-1…0 bar rel.	3 bar	w159	d631
PS001R-606-2UPN8X-H1141	0…1 bar rel.	3 bar	w159	d631
PS001V-606-2UPN8X-H1141	-1…1 bar rel.	3 bar	w159	d631
PS003V-606-2UPN8X-H1141	-1…2.5 bar rel.	7 bar	w159	d631
PS010V-606-2UPN8X-H1141	-1…10 bar rel.	25 bar	w159	d631
PS016V-606-2UPN8X-H1141	-1…16 bar rel.	40 bar	w159	d631
PS025V-606-2UPN8X-H1141	-1…25 bar rel.	65 bar	w159	d631
PS040V-606-2UPN8X-H1141	-1…40 bar rel.	100 bar	w159	d631
PS100R-606-2UPN8X-H1141	0…100 bar rel.	250 bar	w159	d631
PS250R-606-2UPN8X-H1141	0…250 bar rel.	625 bar	w159	d631
PS400R-606-2UPN8X-H1141	0…400 bar rel.	900 bar	w159	d631

G3/4“ – Front-flush diaphragm – Switching and analog output

General data

Output 1	Switching output or IO-Link mode	**Protection class**	IP67
Connection	male, M12 x 1	**Mechanical connection**	G ¾″ front-flush
Medium temperature	-10…85 °C	**Operating voltage**	18…30 VDC
Response time	3 ms	**Housing material**	1.4305 (AISI 303)/PC
Switching frequency	180 Hz	**Accuracy switching output**	0.5 % v. E. BSL
Accuracy LHR analog output	0.5 % of final value BSL		

Types and data – selection table

Type	Relative pressure	Admissible overpressure	Output 2	Operating range	w	d
PS01VR-606-LI2UPN8X-H1141	-1…0 bar rel.	3 bar	Analog or switching output	4…20/ 0…20 mA (3-wire)	w160	d631
PS001R-606-LI2UPN8X-H1141	0…1 bar rel.	3 bar	Analog or switching output	4…20/ 0…20 mA (3-wire)	w160	d631
PS001V-606-LI2UPN8X-H1141	-1…1 bar rel.	3 bar	Analog or switching output	4…20/ 0…20 mA (3-wire)	w160	d631
PS003V-606-LI2UPN8X-H1141	-1…2.5 bar rel.	7 bar	Analog or switching output	4…20/ 0…20 mA (3-wire)	w160	d631
PS010V-606-LI2UPN8X-H1141	-1…10 bar rel.	25 bar	Analog or switching output	4…20/ 0…20 mA (3-wire)	w160	d631
PS016V-606-LI2UPN8X-H1141	-1…16 bar rel.	40 bar	Analog or switching output	4…20/ 0…20 mA (3-wire)	w160	d631
PS025V-606-LI2UPN8X-H1141	-1…25 bar rel.	65 bar	Analog or switching output	4…20/ 0…20 mA (3-wire)	w160	d631
PS040V-606-LI2UPN8X-H1141	-1…40 bar rel.	100 bar	Analog or switching output	4…20/ 0…20 mA (3-wire)	w160	d631

Table continues on the next page…

… Table starts on previous page

Type	Relative pressure	Admissible overpressure	Output 2	Operating range	w	d
PS100R-606-LI2UPN8X-H1141	0…100 bar rel.	250 bar	Analog or switching output	4…20/ 0…20 mA (3-wire)	w160	d631
PS250R-606-LI2UPN8X-H1141	0…250 bar rel.	625 bar	Analog or switching output	4…20/ 0…20 mA (3-wire)	w160	d631
PS400R-606-LI2UPN8X-H1141	0…400 bar rel.	900 bar	Analog or switching output	4…20/ 0…20 mA (3-wire)	w160	d631
PS01VR-606-LUUPN8X-H1141	-1…0 bar rel.	3 bar	analog output	0…10 V, 0…5 V (3-wire)	w161	d631
PS001R-606-LUUPN8X-H1141	0…1 bar rel.	3 bar	analog output	0…10 V, 0…5 V (3-wire)	w161	d631
PS001V-606-LUUPN8X-H1141	-1…1 bar rel.	3 bar	analog output	0…10 V, 0…5 V (3-wire)	w161	d631
PS003V-606-LUUPN8X-H1141	-1…2.5 bar rel.	7 bar	analog output	0…10 V, 0…5 V (3-wire)	w161	d631
PS010V-606-LUUPN8X-H1141	-1…10 bar rel.	25 bar	analog output	0…10 V, 0…5 V (3-wire)	w161	d631
PS016V-606-LUUPN8X-H1141	-1…16 bar rel.	40 bar	analog output	0…10 V, 0…5 V (3-wire)	w161	d631
PS025V-606-LUUPN8X-H1141	-1…25 bar rel.	65 bar	analog output	0…10 V, 0…5 V (3-wire)	w161	d631
PS040V-606-LUUPN8X-H1141	-1…40 bar rel.	100 bar	analog output	0…10 V, 0…5 V (3-wire)	w161	d631
PS100R-606-LUUPN8X-H1141	0…100 bar rel.	250 bar	analog output	0…10 V, 0…5 V (3-wire)	w161	d631
PS250R-606-LUUPN8X-H1141	0…250 bar rel.	625 bar	analog output	0…10 V, 0…5 V (3-wire)	w161	d631
PS400R-606-LUUPN8X-H1141	0…400 bar rel.	900 bar	analog output	0…10 V, 0…5 V (3-wire)	w161	d631

G1/2“ – Front-flush diaphragm – 2 switching outputs

General data

Output 1	Switching output or IO-Link mode	**Output 2**	switching output
Protection class	IP67	**Connection**	male, M12 x 1
Mechanical connection	G ½” front-flush	**Medium temperature**	-10…85 °C
Operating voltage	18…30 VDC	**Response time**	3 ms
Housing material	1.4305 (AISI 303)/PC	**Switching frequency**	180 Hz
Accuracy switching output	0.5 % v. E. BSL		

Types and data – selection table

Type	Relative pressure	Admissible overpressure	w	d
PS010V-609-2UPN8X-H1141	-1…10 bar rel.	25 bar	w159	d632
PS016V-609-2UPN8X-H1141	-1…16 bar rel.	40 bar	w159	d632
PS025V-609-2UPN8X-H1141	-1…25 bar rel.	65 bar	w159	d632
PS040V-609-2UPN8X-H1141	-1…40 bar rel.	100 bar	w159	d632
PS100R-609-2UPN8X-H1141	0…100 bar rel.	250 bar	w159	d632
PS250R-609-2UPN8X-H1141	0…250 bar rel.	625 bar	w159	d632
PS400R-609-2UPN8X-H1141	0…400 bar rel.	900 bar	w159	d632

G1/2" – Front-flush diaphragm – 1 switching and 1 voltage output

General data

Output 1	Switching output or IO-Link mode	**Protection class**	IP67
Connection	male, M12 x 1	**Mechanical connection**	G ½" front-flush
Medium temperature	-10…85 °C	**Operating voltage**	18…30 VDC
Response time	3 ms	**Housing material**	1.4305 (AISI 303)/PC
Switching frequency	180 Hz	**Accuracy switching output**	0.5 % v. E. BSL
Accuracy LHR analog output	0.5 % of final value BSL		

Types and data – selection table

Type	Relative pressure	Admissible overpressure	Output 2	Operating range	w	d
PS010V-609-LI2UPN8X-H1141	-1…10 bar rel.	25 bar	Analog or switching output	4…20/ 0…20 mA (3-wire)	w160	d632
PS016V-609-LI2UPN8X-H1141	-1…16 bar rel.	40 bar	Analog or switching output	4…20/ 0…20 mA (3-wire)	w160	d632
PS025V-609-LI2UPN8X-H1141	-1…25 bar rel.	65 bar	Analog or switching output	4…20/ 0…20 mA (3-wire)	w160	d632
PS040V-609-LI2UPN8X-H1141	-1…40 bar rel.	100 bar	Analog or switching output	4…20/ 0…20 mA (3-wire)	w160	d632
PS100R-609-LI2UPN8X-H1141	0…100 bar rel.	250 bar	Analog or switching output	4…20/ 0…20 mA (3-wire)	w160	d632
PS250R-609-LI2UPN8X-H1141	0…250 bar rel.	625 bar	Analog or switching output	4…20/ 0…20 mA (3-wire)	w160	d632
PS400R-609-LI2UPN8X-H1141	0…400 bar rel.	900 bar	Analog or switching output	4…20/ 0…20 mA (3-wire)	w160	d632
PS010V-609-LUUPN8X-H1141	-1…10 bar rel.	25 bar	analog output	0…10 V, 0…5 V (3-wire)	w161	d632
PS016V-609-LUUPN8X-H1141	-1…16 bar rel.	40 bar	analog output	0…10 V, 0…5 V (3-wire)	w161	d632
PS025V-609-LUUPN8X-H1141	-1…25 bar rel.	65 bar	analog output	0…10 V, 0…5 V (3-wire)	w161	d632
PS040V-609-LUUPN8X-H1141	-1…40 bar rel.	100 bar	analog output	0…10 V, 0…5 V (3-wire)	w161	d632
PS100R-609-LUUPN8X-H1141	0…100 bar rel.	250 bar	analog output	0…10 V, 0…5 V (3-wire)	w161	d632
PS250R-609-LUUPN8X-H1141	0…250 bar rel.	625 bar	analog output	0…10 V, 0…5 V (3-wire)	w161	d632
PS400R-609-LUUPN8X-H1141	0…400 bar rel.	900 bar	analog output	0…10 V, 0…5 V (3-wire)	w161	d632

w Wiring diagrams on page 658 d Dimension drawing on page 670 Accessories on page 560

Pressure sensors – PK series

Multifaceted pneumatic specialists

The PK pressure sensors are especially designed for pneumatic applications and are ideally suited for pick-and-place systems, labelling machines and hoists. The N version is manometer-shaped, features a display and a process connection on the back side. The P version has a rotatable, cylindrical body with display. The processed signal is made available as switching output. These sensors are only made for non-aggressive gas and compressed air applications.

Compact design

The sensors are compact, rugged but at the same time lightweight and thus perfectly suited for handling and automation systems. They feature two switching outputs and are NO/NC programmable in hysteresis mode. The output configuration is easily reprogrammed for special requirements, such as monitoring of a pressure window, for example.

- For pressure and vacuum monitoring
- Compact sensors in cylindrical or manometer-like design
- 3-digit 7-segment display
- Display rotatable by 180°
- Excellent EMC properties
- One LED per output to indicate the switching status

Easy programming

Thanks to the user friendly menu guide, parameters such as switch and release points, output type, analog range and various special functions are easily taught. The buttons are finger-operated. Additional tools are not needed.

Type code

PK	01VR	–	N12L	–	2U	P	8	X	–	V1	1	4	1

PK	01VR	Functional principle	–	N12L	Mechanical version	–	2U	P	8	X	Electrical version	–

Measuring range

01VR -1…0 bar g

010R 0…10 bar g

Functional principle

PK pressure sensor, compact

Design

N12AL display axial, aluminium, G1/8" female thread

N14AL display axial, aluminium, NPT1/8" male thread

P13 display radial, G1/8" male thread

P14 display radial, NPT1/8" male thread

Indication

X… LED display

Voltage range

8 15(18)…30 VDC

Output mode

P PNP

Output function

2U Output 1: switching output Output 2: switching output

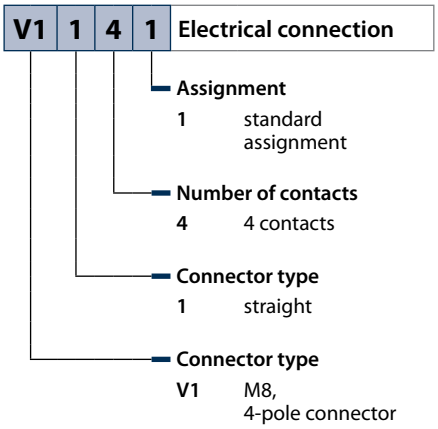
V1 1 4 1 Electrical connection
Assignment
1 standard assignment
Number of contacts
4 4 contacts
Connector type
1 straight
Connector type
V1 M8, 4-pole connector

PK-N series – For pneumatic applications

The PK-N pressure sensors operate with a silicon measuring cell. It is an open silicon chip with direct contact to the medium. The N version is manometer-shaped, features a display and a process connection on the back side. The processed signal is provided at the switching output. These sensors are only suitable for non-aggressive gas and compressed air applications.

Features

- Compact manometer-like design
- 3-digit 7-segment display
- For pressure and vacuum monitoring
- Display rotatable by 180°
- Excellent EMC properties

Properties

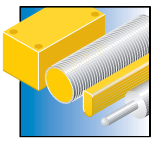

Designs
Manometer-like design with display

Measuring ranges
0…10 bar rel.
0…-1 bar rel.

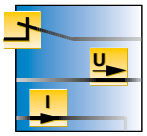

Electrical versions
2-channel with switching outputs

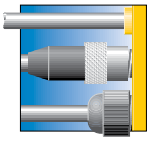

Electrical connections
Male M8 x 1, 4-pin

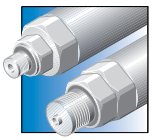

Connectivity
G1/8“ female and 1/8“NPT male thread

Special features
For pneumatic applications

Internet link
Scan the QR code to access our products on the internet

Hans Turck GmbH & Co. KG ▪ Tel. +49 208 49 52-0 ▪ Fax +49 208 49 52-264

G1/8“ – Female – 2 switching outputs

General data

Output 1	switching output	**Output 2**	switching output
Protection class	IP65	**Connection**	male, M8 x 1
Mechanical connection	G ⅛“ female thread	**Medium temperature**	0…50 °C
Operating voltage	10.8…30 VDC	**Housing material**	Al/PVC
Switching frequency	400 Hz	**Accuracy switching output**	1 % v. E. BSL

Types and data – selection table

Type	Relative pressure	Admissible overpressure	w	d
PK01VR-N12AL-2UP8X-V1141	-1…0 bar rel.	5 bar	w162	d633
PK010R-N12AL-2UP8X-V1141	0…10 bar rel.	16 bar	w162	d633

1/8“ NPT – Male – 2 switching outputs

General data

Output 1	switching output	**Output 2**	switching output
Protection class	IP65	**Connection**	male, M8 x 1
Mechanical connection	NPT ⅛” male thread	**Medium temperature**	0…50 °C
Operating voltage	10.8…30 VDC	**Housing material**	Al/PVC
Switching frequency	400 Hz	**Accuracy switching output**	1 % v. E. BSL

Types and data – selection table

Type	Relative pressure	Admissible overpressure	w	d
PK01VR-N14AL-2UP8X-V1141	-1…0 bar rel.	5 bar	w162	d633
PK010R-N14AL-2UP8X-V1141	0…10 bar rel.	16 bar	w162	d633

w Wiring diagrams on page 658 d Dimension drawing on page 670 Accessories on page 560

PK-P series – For pneumatic applications

The PK-P pressure sensors operate with a silicon measuring cell. It is an open silicon chip with direct contact to the medium. The P version has a rotatable, cylindrical body with display. These sensors are only suitable for non-aggressive gas and compressed air applications. The processed signal is provided at the switching output.

Features

- Compact cylindrical design
- Rotatable sensor body
- 3-digit 7-segment display
- For pressure and vacuum monitoring
- Display rotatable by 180°
- Excellent EMC properties

Properties

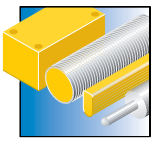

Designs
Cylindrical version with laterally mounted display

Measuring ranges
0…10 bar rel.
0…-1 bar rel.

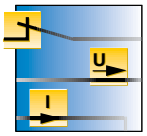

Electrical versions
2-channel with switching outputs

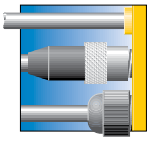

Electrical connections
Male M8 x 1, 4-pin

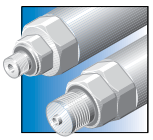

Connectivity
G1/8“ or 1/8“NPT male thread

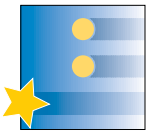

Special features
For pneumatic applications

Internet link
Scan the QR code to access our products on the internet

Hans Turck GmbH & Co. KG ▪ Tel. +49 208 49 52-0 ▪ Fax +49 208 49 52-264

G1/8" – Male – 2 switching outputs

General data

Output 1	switching output	**Output 2**	switching output
Protection class	IP65	**Connection**	male, M8 x 1
Mechanical connection	G ⅛" male thread	**Medium temperature**	0…50 °C
Operating voltage	10.8…30 VDC	**Housing material**	ABS
Switching frequency	400 Hz	**Accuracy switching output**	1 % v. E. BSL

Types and data – selection table

Type	Relative pressure	Admissible overpressure	w	d
PK010R-P13-2UP8X-V1141	0…10 bar rel.	16 bar	w162	d634
PK01VR-P13-2UP8X-V1141	-1…0 bar rel.	5 bar	w162	d634

1/8" NPT – Male – 2 switching outputs

General data

Output 1	switching output	**Output 2**	switching output
Protection class	IP65	**Connection**	male, M8 x 1
Mechanical connection	NPT ⅛" male thread	**Medium temperature**	0…50 °C
Operating voltage	10.8…30 VDC	**Housing material**	ABS
Switching frequency	400 Hz	**Accuracy switching output**	1 % v. E. BSL

Types and data – selection table

Type	Relative pressure	Admissible overpressure	w	d
PK01VR-P14-2UP8X-V1141	-1…0 bar rel.	5 bar	w162	d634
PK010R-P14-2UP8X-V1141	0…10 bar rel.	16 bar	w162	d634

w Wiring diagrams on page 658 d Dimension drawing on page 670 Accessories on page 560

Pressure sensors – PT series

Compact pressure transmitters - Solutions

The pressure transmitters develop their full potential in applications requiring high operational safety and accuracy. Based on proven ceramic technology, these shock and vibration proof devices work reliably even in harsh environments. Thanks to the compact design, the sensors can be applied in almost all areas of industrial automation. The patented medium-stop system prevents the discharge of liquids when burst pressure exceeds 40 bar. In normal operating mode it works as a peak pressure aperture.

Made-to-measure solutions

The PT devices with diaphragm are a cost-efficient solution and a proven success regarding the control of filling levels at vessels. Other typical applications for pressure transmitters are machine tools, pneumatic systems and hydraulic power units. The PT series proves its applicability in refrigeration technology and many other industrial fields with features such as operational safety, accuracy and temperature stability.

Working reliably even under extreme conditions

Equipped with a ceramic measuring cell, a stainless steel body and a FPM O-ring, the PT pressure transmitters resist temperatures of up to 125 °C without any problems. The devices fulfill industrial standards and guarantee a long-term stable performance.

- Compact and rugged design
- Accuracy 0.6 % f.s.
- Stainless steel housing and pressure connection
- 1.4305 (AISI 303)
- Medium-stop system
- Protection class IP67
- Excellent EMC properties
- -1…+600 bar relative pressure
- 0…25 bar absolute pressure

Type code

PT	010V	–	11	–	LI3	–	H1	1	3	1

PT	010V	Functional principle	–	11	Mechanical version	–	LI3	Electrical version	–

Measuring range

01VR	-1…0 bar g *
001R	0…1 bar g *
002R	0…1.6 bar g *
003R	0…2.5 bar g *
004R	0…4 bar g *
006R	0…6 bar g *
010R	0...10 bar g
016R	0…16 bar g
025R	0…25 bar g
040R	0…40 bar g
100R	0…100 bar g
160R	0…160 bar g
250R	0…250 bar g
400R	0…400 bar g
600R	0…600 bar g
001A	0…1 bar a *
002A	0…1.6 bar a *
003A	0…2.5 bar a *
004A	0…4 bar a *
006A	0…6 bar a *
010A	0…10 bar a *
016A	0…16 bar a *
025A	0…25 bar a *

Functional principle

PT	pressure transmitter

Pressure connection

11	G¼" female thread
12	¼"-18 NPT female thread
13	¼"-18-NPT male thread
14	G¼" male thread
26	G¾"male thread front-flush
29	G½" male thread front-flush

Electrical version

LI3	4…20 mA 2-wire
LU2	0…10 V 3-wire *

* only for PT 11-14

g = Relative pressure
a = Absolute pressure

Hans Turck GmbH & Co. KG ▪ Tel. +49 208 49 52-0 ▪ Fax +49 208 49 52-264

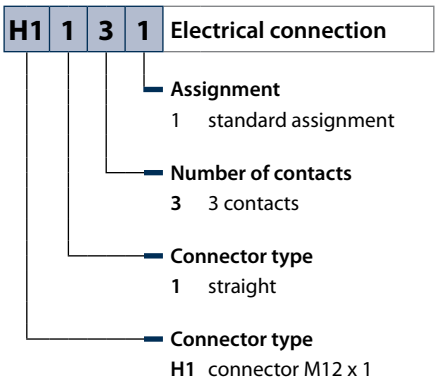
H1 1 3 1
Electrical connection
Assignment
1 standard assignment
Number of contacts
3 3 contacts
Connector type
1 straight
Connector type
H1 connector M12 x 1

PT-series – For temperatures up to +125 °C

The pressure sensors of the PT series operate with ceramic or fully welded thin-film measuring cells. They are cylindrically shaped, made of stainless and have no display. Depending on the sensor version used, the processed signal is output as 4…20 mA (2-wire) or 0…10 V (3-wire).

Features

- Compact and rugged design
- Measuring range -1…600 bar relative pressure
- Temperature range up to +125 °C
- 4…20 mA (2-wire) or 0…10 V (3-wire)
- Excellent EMC properties

Properties

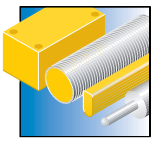

Designs
Cylindrical design, non-rotatable, without display

Measuring ranges
-1…600 bar rel.

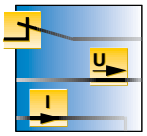

Electrical versions
4…20 mA (2-wire)
0…10 V (3-wire)

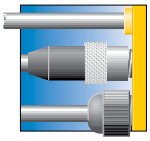

Electrical connections
Male M12 x 1

Connectivity
G ¼“, ¼“ NPT as well as G ½“ and G ¾“ front-flush

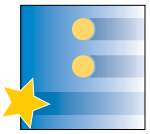

Special features
For media temperatures up to +125 °C, IP67

Internet link
Scan the QR code to access our products on the internet

Hans Turck GmbH & Co. KG ▪ Tel. +49 208 49 52-0 ▪ Fax +49 208 49 52-264

G1/4" – Female – Current output (2-wire)

General data

Output 1	analog output	**Operating range**	4…20 mA (2-wire)
Protection class	IP67	**Connection**	male, M12 x 1
Mechanical connection	G ¼" female thread	**Medium temperature**	-40…125 °C
Operating voltage	8…33 VDC	**Response time**	3 ms
Housing material	1.4305 (AISI 303)/PC	**Accuracy LHR analog output**	0.3 % of final value BSL

Types and data – selection table

Type	Relative pressure	Admissible overpressure	w	d
PT001R-11-LI3-H1131	0…1 bar rel.	3 bar	w163	d635
PT002R-11-LI3-H1131	0…1.6 bar rel.	5 bar	w163	d635
PT003R-11-LI3-H1131	0…2.5 bar rel.	7 bar	w163	d635
PT004R-11-LI3-H1131	0…4 bar rel.	12 bar	w163	d635
PT006R-11-LI3-H1131	0…6 bar rel.	15 bar	w163	d635
PT010R-11-LI3-H1131	0…10 bar rel.	25 bar	w163	d635
PT016R-11-LI3-H1131	0…16 bar rel.	40 bar	w163	d635
PT025R-11-LI3-H1131	0…25 bar rel.	65 bar	w163	d635
PT040R-11-LI3-H1131	0…40 bar rel.	100 bar	w163	d635
PT060R-11-LI3-H1131	0…60 bar rel.	150 bar	w163	d635
PT100R-11-LI3-H1131	0…100 bar rel.	250 bar	w163	d635
PT160R-11-LI3-H1131	0…160 bar rel.	400 bar	w163	d635
PT250R-11-LI3-H1131	0…250 bar rel.	625 bar	w163	d635
PT400R-11-LI3-H1131	0…400 bar rel.	900 bar	w163	d635
PT600R-11-LI3-H1131	0…600 bar rel.	900 bar	w163	d635

G1/4" – Female – Voltage output (3-wire)

General data

Output 1	analog output	**Operating range**	0…10 V (3-wire)
Protection class	IP67	**Connection**	male, M12 x 1
Mechanical connection	G ¼" female thread	**Medium temperature**	-40…125 °C
Operating voltage	11.4…33 VDC	**Response time**	3 ms
Housing material	1.4305 (AISI 303)/PC	**Accuracy LHR analog output**	0.3 % of final value BSL

Types and data – selection table

Type	Relative pressure	Admissible overpressure	w	d
PT001R-11-LU2-H1131	0…1 bar rel.	3 bar	w164	d635
PT002R-11-LU2-H1131	0…1.6 bar rel.	5 bar	w164	d635
PT003R-11-LU2-H1131	0…2.5 bar rel.	7 bar	w164	d635
PT004R-11-LU2-H1131	0…4 bar rel.	12 bar	w164	d635

Table continues on the next page…

… Table starts on previous page

Type	Relative pressure	Admissible overpressure	w	d
PT006R-11-LU2-H1131	0…6 bar rel.	15 bar	w164	d635
PT010R-11-LU2-H1131	0…10 bar rel.	25 bar	w164	d635
PT016R-11-LU2-H1131	0…16 bar rel.	40 bar	w164	d635
PT01VR-11-LU2-H1131	-1…0 bar rel.	3 bar	w164	d635
PT025R-11-LU2-H1131	0…25 bar rel.	65 bar	w164	d635
PT040R-11-LU2-H1131	0…40 bar rel.	100 bar	w164	d635
PT060R-11-LU2-H1131	0…60 bar rel.	150 bar	w164	d635
PT100R-11-LU2-H1131	0…100 bar rel.	250 bar	w164	d635
PT160R-11-LU2-H1131	0…160 bar rel.	400 bar	w164	d635
PT250R-11-LU2-H1131	0…250 bar rel.	625 bar	w164	d635
PT400R-11-LU2-H1131	0…400 bar rel.	900 bar	w164	d635
PT600R-11-LU2-H1131	0…600 bar rel.	900 bar	w164	d635

G1/4" – Male thread – Current output (2-wire)

General data

Output 1	analog output	**Operating range**	4…20 mA (2-wire)
Protection class	IP67	**Connection**	male, M12 x 1
Mechanical connection	G ¼" male thread	**Medium temperature**	-40…125 °C
Operating voltage	8…33 VDC	**Response time**	3 ms
Housing material	1.4305 (AISI 303)/PC	**Accuracy LHR analog output**	0.3 % of final value BSL

Types and data – selection table

Type	Relative pressure	Admissible overpressure	w	d
PT01VR-14-LI3-H1131	-1…0 bar rel.	3 bar	w163	d636
PT001R-14-LI3-H1131	0…1 bar rel.	3 bar	w163	d636
PT002R-14-LI3-H1131	0…1.6 bar rel.	5 bar	w163	d636
PT003R-14-LI3-H1131	0…2.5 bar rel.	7 bar	w163	d636
PT004R-14-LI3-H1131	0…4 bar rel.	12 bar	w163	d636
PT006R-14-LI3-H1131	0…6 bar rel.	15 bar	w163	d636
PT010R-14-LI3-H1131	0…10 bar rel.	25 bar	w163	d636
PT016R-14-LI3-H1131	0…16 bar rel.	40 bar	w163	d636
PT025R-14-LI3-H1131	0…25 bar rel.	65 bar	w163	d636
PT040R-14-LI3-H1131	0…40 bar rel.	100 bar	w163	d636
PT060R-14-LI3-H1131	0…60 bar rel.	150 bar	w163	d636
PT100R-14-LI3-H1131	0…100 bar rel.	250 bar	w163	d636
PT160R-14-LI3-H1131	0…160 bar rel.	400 bar	w163	d636
PT250R-14-LI3-H1131	0…250 bar rel.	625 bar	w163	d636
PT400R-14-LI3-H1131	0…400 bar rel.	900 bar	w163	d636
PT600R-14-LI3-H1131	0…600 bar rel.	900 bar	w163	d636

Many different types available, also with barrel, see type code

G1/4" – Male – Voltage output (3-wire)

General data

Output 1	analog output	**Operating range**	0…10 V (3-wire)
Protection class	IP67	**Connection**	male, M12 x 1
Mechanical connection	G ¼" male thread	**Medium temperature**	-40…125 °C
Operating voltage	11.4…33 VDC	**Response time**	3 ms
Housing material	1.4305 (AISI 303)/PC	**Accuracy LHR analog output**	0.3 % of final value BSL

Types and data – selection table

Type	Relative pressure	Admissible overpressure	w	d
PT01VR-14-LU2-H1131	-1…0 bar rel.	3 bar	w164	d636
PT001R-14-LU2-H1131	0…1 bar rel.	3 bar	w164	d636
PT002R-14-LU2-H1131	0…1.6 bar rel.	5 bar	w164	d636
PT003R-14-LU2-H1131	0…2.5 bar rel.	7 bar	w164	d636
PT004R-14-LU2-H1131	0…4 bar rel.	12 bar	w164	d636
PT006R-14-LU2-H1131	0…6 bar rel.	15 bar	w164	d636
PT010R-14-LU2-H1131	0…10 bar rel.	25 bar	w164	d636
PT016R-14-LU2-H1131	0…16 bar rel.	40 bar	w164	d636
PT025R-14-LU2-H1131	0…25 bar rel.	65 bar	w164	d636
PT040R-14-LU2-H1131	0…40 bar rel.	100 bar	w164	d636
PT060R-14-LU2-H1131	0…60 bar rel.	150 bar	w164	d636
PT100R-14-LU2-H1131	0…100 bar rel.	250 bar	w164	d636
PT160R-14-LU2-H1131	0…160 bar rel.	400 bar	w164	d636
PT250R-14-LU2-H1131	0…250 bar rel.	625 bar	w164	d636
PT400R-14-LU2-H1131	0…400 bar rel.	900 bar	w164	d636
PT600R-14-LU2-H1131	0…600 bar rel.	900 bar	w164	d636

Many different types available, also with barrel, see type code

G1/2" – Male – Front-flush – Current output (2-wire)

General data

Output 1	analog output	**Operating range**	4…20 mA (2-wire)
Protection class	IP67	**Connection**	male, M12 x 1
Mechanical connection	G ½" front-flush	**Medium temperature**	-25…85 °C
Operating voltage	9…30 VDC	**Response time**	1 ms
Housing material	1.4435 (316L)	**Accuracy LHR analog output**	0.5 % of final value BSL

Types and data – selection table

Type	Relative pressure	Admissible overpressure	w	d
PT010R-29-LI3-H1140	0…10 bar rel.	40 bar	w165	d637
PT016R-29-LI3-H1140	0…16 bar rel.	40 bar	w165	d637

Table continues on the next page…

… Table starts on previous page

Type	Relative pressure	Admissible overpressure	w	d
PT025R-29-LI3-H1140	0…25 bar rel.	40 bar	w165	d637
PT040R-29-LI3-H1140	0…40 bar rel.	120 bar	w165	d637
PT060R-29-LI3-H1140	0…60 bar rel.	120 bar	w165	d637
PT100R-29-LI3-H1140	0…100 bar rel.	320 bar	w165	d637
PT160R-29-LI3-H1140	0…160 bar rel.	320 bar	w165	d637
PT250R-29-LI3-H1140	0…250 bar rel.	800 bar	w165	d637
PT400R-29-LI3-H1140	0…400 bar rel.	800 bar	w165	d637

G3/4“ – Male – Front-flush – Current output (2-wire)

General data

Output 1	analog output	**Operating range**	4…20 mA (2-wire)
Protection class	IP67	**Connection**	male, M12 x 1
Mechanical connection	G ¾″ front-flush	**Medium temperature**	-25…85 °C
Operating voltage	9…30 VDC	**Response time**	1 ms
Housing material	1.4435 (316L)	**Accuracy LHR analog output**	0.5 % of final value BSL

Types and data – selection table

Type	Relative pressure	Admissible overpressure	w	d
PT010R-26-LI3-H1140	0…10 bar rel.	40 bar	w165	d638
PT016R-26-LI3-H1140	0…16 bar rel.	40 bar	w165	d638
PT025R-26-LI3-H1140	0…25 bar rel.	40 bar	w165	d638
PT040R-26-LI3-H1140	0…40 bar rel.	120 bar	w165	d638
PT060R-26-LI3-H1140	0…60 bar rel.	120 bar	w165	d638
PT100R-26-LI3-H1140	0…100 bar rel.	320 bar	w165	d638
PT160R-26-LI3-H1140	0…160 bar rel.	320 bar	w165	d638
PT250R-26-LI3-H1140	0…250 bar rel.	800 bar	w165	d638
PT400R-26-LI3-H1140	0…400 bar rel.	800 bar	w165	d638

Wiring diagrams on page 658 Dimension drawing on page 670 Accessories on page 560

Pressure sensors – PC series

Compact IO-Link solution

The PC series is especially made for IO-Link communication, complying with all typical demands of machine building. The sensors communicate on the field-bus level via a point-to-point connection. Cyclic and acyclic services ensure a secure detection of process-relevant values. They can also be used as simple switches. Switch and release point are programmed via the IO-Link interface.

Made-to-measure solutions

The PC series is equipped with the proven ceramic measuring cell technology. Thanks to the rugged design, they are ideally suited for hydraulic applications in a range from -1 to 600 bar. The constant pressure cycles exert load on the membrane, the sealings and the transducer housing. The sensors are therefore protected by a stainless steel housing without display which makes them extremely resistant to pressure.

Type code

PC	250R	–	2	01	–	2UPN	8	X	–	H1	1	4	1

PC	250R	Functional principle	–	2	01	Mechanical Design	–	2UPN	8	X	Electrical version	–

Measuring range

01VR	-1…0 bar g
001R	0…1 bar g
001V	-1…1 bar g
003V	-1…2.5 bar g
010V	-1…10 bar g
016V	-1…16 bar g
025V	-1…25 bar g
040V	-1…40 bar g
100R	1…100 bar g
250R	1…250 bar g
400R	1…400 bar g
600R	1…600 bar g

Functional principle

PC	Pressure sensor

Pressure connection

01	G¼" female thread
02	¼"-18 NPT female thread
03	¼"-18-NPT male thread
04	G¼" male thread
10	R¼" male thread
11	R¼" female thread

Housing

2	cylindrical type, without display

Electrical version

X	with LED display

Voltage range

8	15…30 VDC

Output type

2UPN	2 switching outputs

Hans Turck GmbH & Co. KG ▪ Tel. +49 208 49 52-0 ▪ Fax +49 208 49 52-264

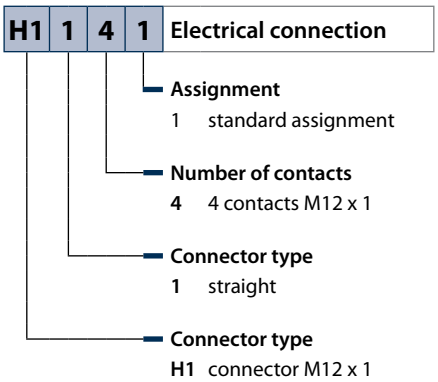
H1 1 4 1
Electrical connection
Assignment
1 standard assignment
Number of contacts
4 4 contacts M12 x 1
Connector type
1 straight
Connector type
H1 connector M12 x 1

PC-series - Hydraulic applications with IO-Link

The PC series is equipped with the proven ceramic measuring cell technology. Thanks to the rugged design, they are ideally suited for hydraulic applications in a range from -1 to 600 bar. The constant pressure cycles exert load on the membrane, the sealings and the transducer housing. The sensors are therefore protected by a stainless steel housing without display which makes them extremely resistant to pressure.

Features

- Compact and rugged design
- Measuring range -1…600 bar relative pressure
- IP 67/ 69K
- IO-Link communication
- 0.5 % f.s.

Properties

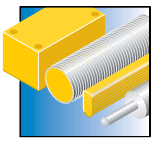

Designs
Cylindrical design, non-rotatable, without display

Measuring ranges
-1…600 bar rel.

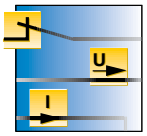

Electrical versions
IO-Link communication
2 switching outputs

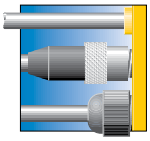

Electrical connections
Male M12 x 1

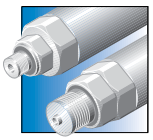

Connectivity
G ¼“ and ¼“NPT, female and male thread

Special features
For media temperatures up to +85 °C, IP67/ IP69K

Internet link
Scan the QR code to access our products on the internet

Hans Turck GmbH & Co. KG ▪ Tel. +49 208 49 52-0 ▪ Fax +49 208 49 52-264

G1/4“ – Female thread – 2 switching outputs

General data

Output 1	Switching output or IO-Link mode	**Output 2**	switching output
Protection class	IP69K	**Connection**	male, M12 x 1
Mechanical connection	G ¼” female thread	**Medium temperature**	-40…85 °C
Operating voltage	15…30 VDC	**Response time**	3 ms
Housing material	1.4305 (AISI 303)/ PBT-GF15	**Switching frequency**	180 Hz
Accuracy switching output	0.5 % v. E. BSL		

Types and data – selection table

Type	Relative pressure	Admissible overpressure	w	d
PC01VR-201-2UPN8X-H1141	-1…0 bar rel.	5,5 bar	w159	d639
PC001V-201-2UPN8X-H1141	-1…1 bar rel.	5,5 bar	w159	d639
PC001R-201-2UPN8X-H1141	0…1 bar rel.	5,5 bar	w159	d639
PC003V-201-2UPN8X-H1141	-1…2.5 bar rel.	12 bar	w159	d639
PC010V-201-2UPN8X-H1141	-1…10 bar rel.	50 bar	w159	d639
PC016V-201-2UPN8X-H1141	-1…16 bar rel.	80 bar	w159	d639
PC025V-201-2UPN8X-H1141	-1…25 bar rel.	120 bar	w159	d639
PC040V-201-2UPN8X-H1141	-1…40 bar rel.	200 bar	w159	d639
PC100R-201-2UPN8X-H1141	0…100 bar rel.	450 bar	w159	d639
PC250R-201-2UPN8X-H1141	0…250 bar rel.	600 bar	w159	d639
PC400R-201-2UPN8X-H1141	0…400 bar rel.	800 bar	w159	d639
PC600R-201-2UPN8X-H1141	0…600 bar rel.	900 bar	w159	d639

Many different types available, also with barrel, see type code

G1/4“ – Male thread – 2 switching outputs

General data

Output 1	Switching output or IO-Link mode	**Output 2**	switching output
Protection class	IP69K	**Connection**	male, M12 x 1
Mechanical connection	G ¼” male thread	**Medium temperature**	-40…85 °C
Operating voltage	15…30 VDC	**Response time**	3 ms
Housing material	1.4305 (AISI 303)/ PBT-GF15	**Switching frequency**	180 Hz
Accuracy switching output	0.5 % v. E. BSL		

Types and data – selection table

Type	Relative pressure	Admissible overpressure	w	d
PC01VR-204-2UPN8X-H1141	-1…0 bar rel.	5,5 bar	w159	d640
PC001V-204-2UPN8X-H1141	-1…1 bar rel.	5,5 bar	w159	d640
PC001R-204-2UPN8X-H1141	0…1 bar rel.	5,5 bar	w159	d640
PC003V-204-2UPN8X-H1141	-1…2.5 bar rel.	12 bar	w159	d640
PC010V-204-2UPN8X-H1141	-1…10 bar rel.	50 bar	w159	d640
PC016V-204-2UPN8X-H1141	-1…16 bar rel.	80 bar	w159	d640

Table continues on the next page…

… Table starts on previous page

Type	Relative pressure	Admissible overpressure	w	d
PC025V-204-2UPN8X-H1141	-1…25 bar rel.	120 bar	w159	d640
PC040V-204-2UPN8X-H1141	-1…40 bar rel.	200 bar	w159	d640
PC100R-204-2UPN8X-H1141	0…100 bar rel.	450 bar	w159	d640
PC250R-204-2UPN8X-H1141	0…250 bar rel.	600 bar	w159	d640
PC400R-204-2UPN8X-H1141	0…400 bar rel.	800 bar	w159	d640
PC600R-204-2UPN8X-H1141	0…600 bar rel.	900 bar	w159	d640

Many different types available, also with barrel, see type code

Wiring diagrams on page 658 Dimension drawing on page 670 Accessories on page 560

Temperature sensors

Temperature sensors - Highly optimized specialists for every requirement

Temperature is a critical factor in many industrial processes and has to be monitored constantly in order to operate machines and systems safely and efficiently. A reliable and practical solution for temperature measurement are electronic temperature sensors and transmitters. Reliability is not just provided through high accuracy and repeatability but also through many available interfaces to the process and the operator.
Temperature measurement in industrial applications is mainly implemented with resistance thermometers or thermoelements. Resistance thermometers accomplish this via temperature-sensitive electrical resistors. While the resistance of PTCs increases with the rise of temperature, NTCs behave opposite.
Thermoelements are applied to detect temperatures up to +1700 °C and higher. A thermoelement consists of two different interconnected metals or semiconductors. A temperature difference between the two metals causes electric potential of corresponding magnitude at the interconnection. In practice, the temperature of a cold spot is detected with a separate probe from which the temperature of the hot spot is then deduced.
Infrared sensors are applied for non-contact measurement of surface temperatures in a range between -70 °C and +1000 °C. The distance-spot ratio is thereby of importance because it indicates the diameter (S) of the spot at a given distance (D).
The TURCK product portfolio guarantees maximum flexibility for temperature measurement through numerous connection possibilities and output signals.
The intelligent sensors of the TS series fulfill all application specific requirements to the optimum through easy programming, flexible process connection and well readable displays. The compact sensors of the TT/TC series are available with integrated probe but also with standard M12 male connection to mount external probes. The infrared sensors of the T-Gage series measure temperatures contactless between 0 and +300 °C at wavelengths between 8 and 14 µm. A further important device of the product portfolio is the IP67 rated Pt100 resistance thermometer for temperature measurements between -50 and +500 °C. The temperature probes of the TP series are available in different lengths and diameters. The sensor can be adapted to critical applications with a thermowell.

Temperature sensors – TS series

Made-to-measure solutions

Due to its high accuracy of 0.2 K, the temperature sensors of the TS series handle a large spectrum of applications with only a few devices. Temperature is detected with a Pt100 directly connected to the M12 male or via a standard connection cable. Temperatures are detected in a range between -50 and +500 °C. The 4-digit 7-segment LED display indicates the temperature and makes programming easier. The devices are available with two transistor switching outputs or with one switching and one analog output. High EMC immunity and protection classes IP67/IP69K guarantee reliable operation, even under harsh conditions. All TS sensors are equipped with an IO-Link interface.

Flexible mounting

Inclined by 45° the display is well readable from any position and even from a great distance. Horizontal mounting is also possible. The read direction can be reversed by 180° degrees via software.
After locking the pressure connection, the TS500 can be rotated by 320° degrees and moved in any desired position.
Once the final position is attained, the device is fixed in place with a second coupling nut. Special mounting aids are not required. With a diameter of only 34 mm, several sensors can be mounted side by side in confined spaces.

Clearly visible display

The bright 4-digit 7-segment display indicates the temperature during normal operation and is easy to program. The sloped display allows the sensors to be mounted on top or in front according to the position of the process connection. The read direction can be reversed by 180° degrees via software. Values are thus perfectly readable, even if the sensor is mounted horizontally.

Hans Turck GmbH & Co. KG ▪ Tel. +49 208 49 52-0 ▪ Fax +49 208 49 52-264

rs – TS series

Easy programming

Thanks to the user friendly menu guide the switch and release point, the output function, the analog range and various special functions are easily taught via pushbuttons.
The TS series is programmed with the buttons MODE and SET. Tools are not needed to view the parameter values. To protect against unintentional changes of data, the ENTER button for storing the values is recessed. The button can only be pressed with a pointed object, such as a ball pen for example.

Rugged design

The sensor body, temperature and electrical connection are made of stainless steel. All sensors feature excellent EMC properties and are IP67 protected. Absolute operational safety is thus guaranteed even in rough production environments. The mineral-insulated probes are enormously flexible and temperature-resistant. Rugged TURCK connection cables provide the necessary security for connection.

High system availability

The TS series excels in excellent EMC properties and is IP67 protected. Sensor body, temperature and electrical connection of the programmable devices are made of stainless steel and guarantee maximum operational safety:

- Excellent EMC properties, highly interference immune
- Protection against mechanical impacts thanks to the rugged design
- Minimum maintenance effort through optimized temperature coupling
- Short down-times through high system availability and short replacement times

Temperature sensors – TS series

Extremely service-friendly

Flexible mounting options, user-friendliness and accuracy provide calculable advantages, such as:

- Minimum maintenance effort through optimized performance of the sensors and a streamlined product portfolio.
- Easy configuration and operation via pushbuttons
- Recessed programming button
- Large and good readable display
- The upper part of the TS500 sensor is rotatable by 320°
- Communication via IO-Link
- VDMA menu guide (optional)

Efficient standardization

A single sensor replaces many conventional types. The intelligent temperature sensors fulfill many different control tasks and reduce the number of required sensors considerably.
A reduced inventory pays off for you:

- Only a few sensors are needed to cover a large range of applications
- Reduced training effort due to simple and failsafe operation
- High system safety achieved through a rugged design
- 4-pole standard M12 male connection at the probe and processor unit

Hans Turck GmbH & Co. KG ▪ Tel. +49 208 49 52-0 ▪ Fax +49 208 49 52-264

ors – TS series

Type code

TS	–	5	00	–	LI2U	PN	8	X	–	H1	1	4	1

TS	Functional principle	–	5	00	Mechanical version	–	LI2U	PN	8	X	Electrical version	–

Functional principle

TS temperature sensor

Process connection

00 without process connection temperature probe via M12 x 1

Design

4 adjustable, with display, non-rotatable

5 adjustable, with display, rotatable

Indication

X... Number of LEDs or multicolor LED

Voltage range

8 15(18)…30 VDC

Output range

PN PNP/NPN output

Output function

2U output 1: switching output Ausgang 2: switching output

LUU output 1: switching output output 2: voltage output

LI2U output 1: switching output output 2: current/switching output reprogrammable

Hans Turck GmbH & Co. KG ▪ Tel. +49 208 49 52-0 ▪ Fax +49 208 49 52-264

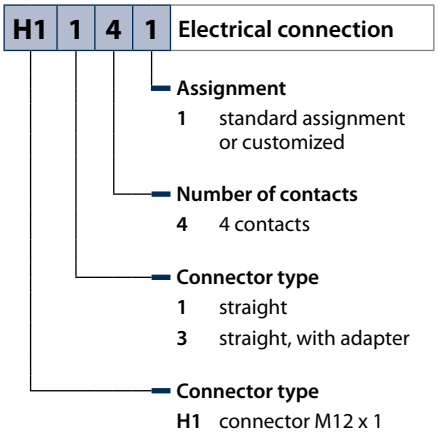
H1 1 4 1 Electrical connection
Assignment
1 standard assignment or customized
Number of contacts
4 4 contacts
Connector type
1 straight
3 straight, with adapter
Connector type
H1 connector M12 x 1

Designs and variants

	Mechanical connection	Connection	Output 1	Output 2	Page
Pt100 processing unit – Switching and analog outputs	Cylindrical, Ø 18 mm	male, M12 x 1	Switching output or IO-Link mode	switching output Analog or switching output analog output	449
Pt100 processing unit rotatable – Switching and analog outputs	Cylindrical, Ø 18 mm	male, M12 x 1	Switching output or IO-Link mode	switching output Analog or switching output analog output	451
Processing unit without probe – 1 current output (2-wire))	for compression ferrule fittings, protective tubing or direct mounting	male, M12 x 1	analog output	–	457
Processing unit without probe – 1 switching output	–	male, M12 x 1	Switching output	–	457
Temperature transmitter with compact probe Ø 3 mm – 1 current output (2-wire)	G ⅛" male thread	male, M12 x 1	analog output	–	458
Temperature switch with compact probe Ø 3 mm – 1 switching output	G ⅛" male thread	male, M12 x 1	Switching output	–	458
Temperature transmitter with rod-type probe Ø 6 mm – 1 current output (2-wire)	for compression ferrule fittings, protective tubing or direct mounting	male, M12 x 1	analog output	–	459

Hans Turck GmbH & Co. KG ▪ Tel. +49 208 49 52-0 ▪ Fax +49 208 49 52-264

ts and variants

	Mechanical connection	Connection	Output 1	Output 2	Page
Transmitter with compact probe Ø 3 mm – Current output (2-wire)	G ⅛" male thread	male, M12 x 1	analog output	–	461
Transmitter with rod-shaped probe Ø 6 mm – Current output (2-wire)	for compression ferrule fittings, protective tubing or direct mounting	male, M12 x 1	analog output	–	461
Compact probe – Ø 3 mm – Process connection	G ⅛" male thread	male, M12 x 1	–	–	473
Rod-type probe – Ø 3 mm	for compression ferrule fittings, protective tubing or direct mounting	male, M12 x 1	–	–	473
Rod-type probe – Ø 6 mm	for compression ferrule fittings, protective tubing or direct mounting	male, M12 x 1	–	–	474
Cable probe – Ø 6 mm	for compression ferrule fittings, protective tubing or direct mounting	male, M12 x 1	–	–	474

TS400 series – Pt 100 probe (4-wire)

The TS400 processor units are incorporated in a non-rotatable, rugged stainless steel housing. A standard male M12 x 1 connection is available for TP temperature probes. The display indicates the temperature during normal operation and guides the operator through the programming menu. We offer sensors with switching outputs or a combination of switching and analog outputs. IO-Link communication is integrated as a standard.

Features

- Temperature probes connected via male M12 x 1
- Housing, temperature and electrical connection are made of stainless steel
- Highest flexibility through modular system
- Secure programming through recessed pushbutton and keylock
- Permanent display of temperature (°C, °F, K, Ω)
- Storage of max/min values

Properties

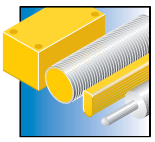

Designs
Cylindrical, non-rotatable, with display

Measuring ranges
-50…+500 °C

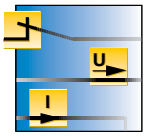

Electrical versions
IO-Link capable, 2-channel, switching, current or voltage output

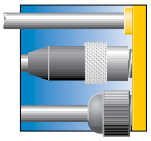

Electrical connections
Male M12 x 1, 4-pin

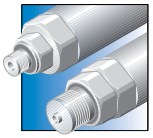

Connectivity
Cylindrical design 18 mm, for mounting bracket
Male M12 x 1 for probe

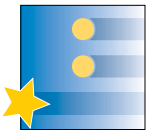

Special features
Failsafe 3-key operation, VDMA menu guide (optional), IP67, fully encapsulated sensor

Internet link
Scan the QR code to access our products on the internet

Pt100 processing unit – Switching and analog outputs

General data

Output 1	Switching output or IO-Link mode	**Protection class**	IP67
Connection	male, M12 x 1	**Temperature operating range**	-50…500 °C
Mechanical connection	Cylindrical, Ø 18 mm	**Response time**	100 ms
Housing material	V2A (1.4305)	**Switching frequency**	180 Hz
Remark	0.1% of full scale applies to temperatures > 200°C	**Switching point accuracy**	0.2 K

Types and data – selection table

Type	Output 2	Operating range	Operating voltage	Accuracy (Lin. + Hys. + Rep.)	w	d
TS-400-2UPN8X-H1141	switching output	–	15…30 VDC	–	w166	d641
TS-400-LI2UPN8X-H1141	Analog or switching output	4…20/ 0…20 mA (3-wire)	18…30 VDC	0.2 K	w167	d641
TS-400-LUUPN8X-H1141	analogue output	0…10 V/0…5 V/1…6 V (3-wire)	18…30 VDC	0.2 K	w168	d641

w Wiring diagrams on page 658 d Dimension drawing on page 670 Accessories on page 560

TS500 series fo Pt 100 probe (4-wire)

The TS500 processor units are rotatable by 320° and equipped with 4-digit 7-segment displays. A standard male M12 x 1 connection is available for TP temperature probes. The display indicates the temperature during normal operation and guides the operator through the programming menu. We offer sensors with switching outputs or a combination of switching and analog outputs. IO-Link communication is integrated as a standard.

Features

- Sensor rotatable by 320°
- Temperature probes connected via male M12 x 1
- Housing, temperature and electrical connection are made of stainless steel
- Highest flexibility through modular system
- Secure programming through recessed pushbutton and keylock
- Permanent display of temperature (°C, °F, K,Ω)
- Storage of max/min values

Properties

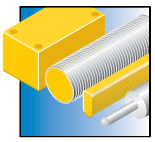

Designs
Cylindrical, rotatable, with display

Measuring ranges
-50…+500 °C

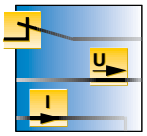

Electrical versions
IO-Link capable, 2-channel, switching, current or voltage output

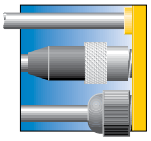

Electrical connections
Male M12 x 1, 4-pin

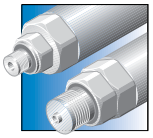

Connectivity
Cylindrical design 18 mm, for mounting bracket
Male M12x1 for probe

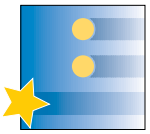

Special features
Failsafe 3-key operation, VDMA menu guide (optional), IP67, fully encapsulated sensor

Internet link
Scan the QR code to access our products on the internet

Pt100 processing unit rotatable – Switching and analog outputs

General data

Output 1	Switching output or IO-Link mode	**Protection class**	IP67
Connection	male, M12 x 1	**Temperature operating range**	-50…500 °C
Mechanical connection	Cylindrical, Ø 18 mm	**Response time**	100 ms
Housing material	V2A (1.4305)	**Switching frequency**	180 Hz
Remark	0.1% of full scale applies to temperatures > 200°C	**Switching point accuracy**	0.2 K

Types and data – selection table

Type	Output 2	Operating range	Operating voltage	Accuracy (Lin. + Hys. + Rep.)	w	d
TS-500-2UPN8X-H1141	switching output	–	15…30 VDC	–	w166	d642
TS-500-LI2UPN8X-H1141	Analog or switching output	4…20/ 0…20 mA (3-wire)	18…30 VDC	0.2 K	w167	d642
TS-500-LUUPN8X-H1141	analogue output	0…10 V/0…5 V/1…6 V (3-wire)	18…30 VDC	0.2 K	w168	d642

Temperature sensors

w Wiring diagrams on page 658 d Dimension drawing on page 670 Accessories on page 560

Temperature sensors – TT/TC series

Flexible temperature transmitter and sensor

The sensors of the TT/TC series detect temperature with a Pt100 4-wire probe. Available are compact devices with integrated probe but also with standard M12 connector for separate probes. The temperature transmitters of the TT series feature an analog output 4…20 mA (2-wire). The devices of the TC series instead feature a switching output. Depending on the combination of sensor and probe, temperatures are measured in a range between -50…+500 °C. The temperature range can be customized on request.

Cost-efficient transmitter solution

Termperature transmitters and sensors of the TT/TC series are applied in places where transducers are not required and the customer needs highest flexibility regarding the choice of probe and thermowell:

- Temperature range -50…+500 °C
- Rugged stainless steel housing, IP67 protected
- Versions with integrated probe or without probe
- Connection of separate probes via M12 connector
- Highest flexibility in choice of probe
- Further mounting aids are not required
- Analog output 4…20 mA (TT series) or switching output (TC series)

Type code

TT	–	103A	–	G1/8	–	H1	1	4	0	–	L013	/	S713

TT	Functional principle	–	103A	Mechanical version	–	G1/8	Process connection	–

Functional principle

TC temperature switch

TT temperature transmitter

Housing

100A processor unit without probe, connection of probe via M12 x 1

103A processor unit with probe Ø 3 mm, process connection via standard thread accuracy class A

206A processor unit with probe Ø 6 mm, process connection via compression fitting thermowell, accuracy class A

Process connection (only devices with built-on probe)

G1/8 G1/8" male thread (only 103A)

CF connection compression fitting thermowell (only 206A)

H1	1	4	0	Electrical connection	–	L013	Probe length	/	S713	Costumized measuring range

Assignment

0 standard assignment or customized

Number of contacts

4 4 contacts

Connector type

1 straight

Connector type

H1 connector M12 x 1

Probe length in mm

L013 13 mm (only with 103A)

L024 24 mm (only with 103A)

L100 100 mm (only with 206A)

L150 150 mm (only with 206A)

Customized measuring range on request

S713 when placing your order add "/S713" to the type code (e.g. "TT-100-LI6-H1140/S713") and the following details:
temperature sensor TC:
desired switch and release point
temperature transmitter TT:
measuring range
(adjustable via analog star and end point)

TT/ TC series – Temperature transmitters and switches

The temperature transmitters of the TT series as well as the temperature switches of the TC series are available with or without integrated probe. The versions without probe take any Pt100 (4-wire) probe of the TP series.
The TT temperature transmitters are set to 0…+150 °C by default. The processed signal is provided via an analog current output, 4…20 mA (2-wire). The TC devices feature a switching output, switch and release point are set by default. Customized settings are available on request.

Features

- Operating range -50 …+500 °C
- Customized settings
- Transmitter with analog current output 4…20 mA (2-wire), default temperature range 0…+150 °C
- Sensor with PNP output (NO), customized switch and release point

Properties

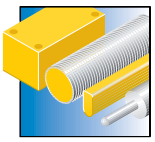

Designs
Compact cylindrical design, Ø 29 mm

Measuring ranges
-50…+500 °C

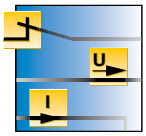

Electrical versions
Analog current output 4…20 mA (2-wire) or PNP switching output (NO)

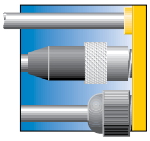

Electrical connections
Male M12 x 1, 4-pin

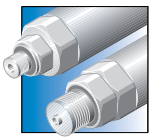

Connectivity
Probes available with standard thread, compression fitting or thermowell

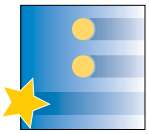

Special features
Customized temperature range, many connection possibilities for the probe

Internet link
Scan the QR code to access our products on the internet

Hans Turck GmbH & Co. KG ▪ Tel. +49 208 49 52-0 ▪ Fax +49 208 49 52-264

Processing unit without probe – 1 current output (2-wire)

General data

Output 1	analog output	**Operating range**	4…20 mA (2-wire)
Protection class	IP67	**Connection**	male, M12 x 1
Temperature operating range	-50…500 °C	**Mechanical connection**	for compression ferrule fittings, protective tubing or direct mounting
Pressure resistance	100 bar	**Operating voltage**	8…35 VDC
Housing material	V4A 1.4401 (AISI 316)	**Response time**	Dependent on connected temperature sensor
Accuracy (Lin. + Hys. + Rep.)	0.2 K		

Types and data – selection table

Type	w	d
TT-100-LI6-H1140	w169	d643

Processing unit without probe – 1 switching output

General data

Output 1	switching output	**Protection class**	IP67
Connection	male, M12 x 1	**Temperature operating range**	-50…500 °C
Operating voltage	15…30 VDC	**Switching frequency**	1 kHz
Housing material	V4A 1.4401 (AISI 316)	**Ambient temperature**	-25…+80 °C
Response time	Dependent on connected temperature sensor	**Switching point accuracy**	0.2 K

Types and data – selection table

Type	w	d
TC-100-AP6-H1140	w170	d643
TC-100-AP6-H1140/S713	w170	d643

w Wiring diagrams on page 658 d Dimension drawing on page 670 Accessories on page 560

Temperature transmitter with compact probe Ø 3 mm – 1 current output (2-wire)

General data

Output 1	analog output	**Operating range**	4…20 mA (2-wire)
Protection class	IP67	**Connection**	male, M12 x 1
Sensor quality	AISI 316	**Temperature operating range**	0…150 °C
Mechanical connection	G ⅛″ male thread	**Pressure resistance**	100 bar
Operating voltage	8…35 VDC	**Housing material**	V4A 1.4401 (AISI 316)
Outer diameter	3 mm	**Accuracy**	Class A
Accuracy (Lin. + Hys. + Rep.)	0.2 K		

Types and data – selection table

Type	Immersion depth (L)	w	d
TT-103A-G1/8-LI6-H1140-L013	13 mm	w169	d644
TT-103A-G1/8-LI6-H1140-L024	24 mm	w169	d645

Temperature switch with compact probe Ø 3 mm – 1 switching output

General data

Output 1	switching output	**Protection class**	IP67
Connection	male, M12 x 1	**Sensor quality**	AISI 316
Temperature operating range	0…150 °C	**Mechanical connection**	G ⅛″ male thread
Pressure resistance	100 bar	**Operating voltage**	15…30 VDC
Switching frequency	1 kHz	**Housing material**	V4A 1.4401 (AISI 316)
Outer diameter	3 mm	**Ambient temperature**	-25…+80 °C
Switching point accuracy	0.2 K	**Accuracy**	Class A

Types and data – selection table

Type	Immersion depth (L)	w	d
TC-103A-G1/8-AP6-H1140-L013	13 mm	w170	d644
TC-103A-G1/8-AP6-H1140-L024	24 mm	w170	d645

Temperature transmitter with rod-type probe Ø 6 mm – 1 current output (2-wire)

General data

Output 1	analog output	**Operating range**	4…20 mA (2-wire)
Protection class	IP67	**Connection**	male, M12 x 1
Sensor quality	AISI 316	**Temperature operating range**	0…150 °C
Mechanical connection	for compression fer-rule fittings, protective tubing or direct mounting	**Pressure resistance**	100 bar
Operating voltage	8…35 VDC	**Housing material**	V4A 1.4401 (AISI 316)
Outer diameter	6 mm	**Accuracy**	Class A
Accuracy (Lin. + Hys. + Rep.)	0.2 K		

Types and data – selection table

Type	Immersion depth (L)	w	d
TT-206A-CF-LI6-H1140-L0100	100 mm	w169	d646
TT-206A-CF-LI6-H1140-L0150	150 mm	w169	d647

w Wiring diagrams on page 658 d Dimension drawing on page 670 Accessories on page 560

Temperature sensors – TTM series

Miniature transmitters

The TTM miniature sensors detect temperature with a 4-wire Pt1000 probe. Available are compact devices with integrated probe. The TTMs are transmitters with analog output 4…20 mA (2-wire) and have the electronics incorporated in the M12 x 1 connector. Depending on the combination of sensor and probe, temperatures are measured in a range between -50… +500 °C. The temperature range can be customized on request.

Cost-efficient transmitter solution

Miniature transmitters of the TTM series are applied in places where transducers are not required and customers need highest flexibility regarding the choice of probe and thermowell:

- Analog output 4…20 mA in the M12 x 1 connector hood
- Versions with integrated rod-type or screw-in probe
- Highest flexibility in choice of probe
- Depending on the type of probe used, mounting aids are not required
- Temperature range -50…+500 °C
- Protection class IP67

Type code

TTM	–	100C	–	203A	–	CF	–	LI6	–	H1	1	4	0	–	L100

TTM	Functional principle	–	100C	Measuring range	–	203A	Housing	–

Type

TTM Temperature transmitter miniature

Measuring range (other ranges on request)

50C 0…50 °C

100C 0…100 °C

150C 0…150 °C

Housing

103A processor unit with probe Ø 3 mm, process connection via standard thread, accuracy class A

203A for ferrule/thermowell, probe Ø 3 mm, accuracy class A

206A for ferrule/thermowell, probe , probe Ø 6 mm

L100	Insertion depth

Probe length in mm

L100 100 mm

L150 150 mm

special lengths on request!

Hans Turck GmbH & Co. KG ▪ Tel. +49 208 49 52-0 ▪ Fax +49 208 49 52-264

CF	Process connection	–	LI6	Electrical Output	–	H1	1	4	0	Electrical connection	–

Process connection

G1/8	G1/8" male thread
CF	compression fittings

Electrical Output

LI6	4…20 mA 2-wire

Assignment

0	customized assignment

Number of contacts

4	4 contacts

Connector type

1	straight

Connector type

H1	connector M12 x 1

TTM series – Miniature transmitters

The miniature transmitters of the TTM series are available with integrated probe. Miniature sensors of the TTM series fit in the most confined spaces and measure temperatures precisely via the integrated processor and the Pt1000 class A measuring element. The overmoulded sensor electronics is only 25 mm longer and 1.5 mm wider than a standard M12 x 1 male connector and provides an output signal of 4…20 mA in 2-wire technology.

Features

- Operating range depending on the transmitter -50…+500 °C
- Customized default settings on request
- Analog current output 4…20 mA (2-wire)
- For factory setting see type code

Properties

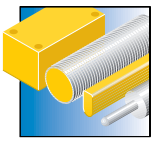

Designs
Compact miniature design, Ø 15 mm

Measuring ranges
-50…+500 °C

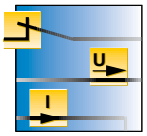

Electrical versions
Analog current output 4…20 mA (2-wire)

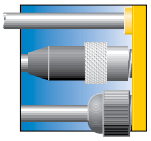

Electrical connections
Male M12 x 1, 4-pin

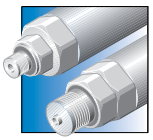

Connectivity
Probes available with standard thread, compression fitting or thermowell

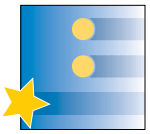

Special features
Customized temperature ranges

Internet link
Scan the QR code to access our products on the internet

Hans Turck GmbH & Co. KG ▪ Tel. +49 208 49 52-0 ▪ Fax +49 208 49 52-264

Transmitter with compact probe Ø 3 mm – Current output (2-wire)

General data

Output 1	analog output	**Operating range**	4…20 mA (2-wire)
Protection class	IP67	**Connection**	male, M12 x 1
Sensor quality	AISI 316L	**Mechanical connection**	G ⅛" male thread
Pressure resistance	100 bar	**Operating voltage**	10…24 VDC
Housing material	V4A (1.4404)	**Outer diameter**	3 mm
Response time	t0.5 = 1.5 s/ t0.9 = 6.0 s in water at 0.2 m/s	**Accuracy**	Class A
Accuracy (Lin. + Hys. + Rep.)	0.2 K		

Types and data – selection table

Type	Temperature operating range	Immersion depth (L)	w	d
TTM100C-103A-G1/8-LI6-H1140-L013	0…100 °C	13 mm	w171	d648
TTM050C-103A-G1/8-LI6-H1140-L013 -50…50°C	-50…50 °C	13 mm	w171	d648
TTM100C-103A-G1/8-LI6-H1140-L024	0…100 °C	24 mm	w171	d649
TTM050C-103A-G1/8-LI6-H1140-L024 -50…50°C	-50…50 °C	24 mm	w171	d649

Transmitter with rod-shaped probe Ø 3 or 6 mm – Current output (2-wire)

General data

Output 1	analog output	**Operating range**	4…20 mA (2-wire)
Protection class	IP67	**Connection**	male, M12 x 1
Sensor quality	AISI 316L	**Mechanical connection**	for compression fer-rule fittings, protective tubing or direct mounting
Pressure resistance	100 bar	**Operating voltage**	10…24 VDC
Housing material	V4A (1.4404)	**Accuracy**	Class A
Accuracy (Lin. + Hys. + Rep.)	0.2 K		

Types and data – selection table

Type	Temperature operating range	Outer diameter	Immersion depth (L)	Response time	w	d
TTM100C-203A-CF-LI6-H1140-L100	0…100 °C	3 mm	100 mm	t0.5 = 1.5 s/ t0.9 = 6.0 s in water at 0.2 m/s	w171	d650
TTM100C-203A-CF-LI6-H1140-L150	0…100 °C	3 mm	150 mm	t0.5 = 1.5 s/ t0.9 = 6.0 s in water at 0.2 m/s	w171	d651
TTM150C-203A-CF-LI6-H1140-L100	0…150 °C	3 mm	100 mm	t0.5 = 1.5 s/ t0.9 = 6.0 s in water at 0.2 m/s	w171	d650
TTM150C-203A-CF-LI6-H1140-L150	0…150 °C	3 mm	150 mm	t0.5 = 1.5 s/ t0.9 = 6.0 s in water at 0.2 m/s	w171	d651
TTM150C-203A-CF-LI6-H1140-L100-50…150°C	-50…150 °C	3 mm	100 mm	t0.5 = 1.5 s/ t0.9 = 6.0 s in water at 0.2 m/s	w171	d650
TTM150C-203A-CF-LI6-H1140-L150-50…150°C	-50…150 °C	3 mm	150 mm	t0.5 = 1.5 s/ t0.9 = 6.0 s in water at 0.2 m/s	w171	d651
TTM050C-203A-CF-LI6-H1140-L100-50…50°C	-50…50 °C	3 mm	100 mm	t0.5 = 1.5 s/ t0.9 = 6.0 s in water at 0.2 m/s	w171	d650

Table continues on the next page…

… Table starts on previous page

Type	Temperature operating range	Outer diameter	Immersion depth (L)	Response time	w	d
TTM050C-203A-CF-LI6-H1140-L150-50…50°C	-50…50 °C	3 mm	150 mm	t0.5 = 1.5 s/ t0.9 = 6.0 s in water at 0.2 m/s	w171	d651
TTM100C-206A-CF-LI6-H1140-L100	0…100 °C	6 mm	100 mm	t0.5 = 6 s/ t0.9 = 15 s in water at 0.2 m/s	w171	d652
TTM100C-206A-CF-LI6-H1140-L150	0…100 °C	6 mm	150 mm	t0.5 = 6 s/ t0.9 = 15 s in water at 0.2 m/s	w171	d652
TTM150C-206A-CF-LI6-H1140-L100	0…150 °C	6 mm	100 mm	t0.5 = 6 s/ t0.9 = 15 s in water at 0.2 m/s	w171	d652
TTM150C-206A-CF-LI6-H1140-L150	0…150 °C	6 mm	150 mm	t0.5 = 6 s/ t0.9 = 15 s in water at 0.2 m/s	w171	d652
TTM150C-206A-CF-LI6-H1140-L100-50…150°C	-50…150 °C	6 mm	100 mm	t0.5 = 6 s/ t0.9 = 15 s in water at 0.2 m/s	w171	d652
TTM150C-206A-CF-LI6-H1140-L150-50…150°C	-50…150 °C	6 mm	150 mm	t0.5 = 6 s/ t0.9 = 15 s in water at 0.2 m/s	w171	d652
TTM050C-206A-CF-LI6-H1140-L100-50…50°C	-50…50 °C	6 mm	100 mm	t0.5 = 6 s/ t0.9 = 15 s in water at 0.2 m/s	w171	d652
TTM050C-206A-CF-LI6-H1140-L150-50…50°C	-50…50 °C	6 mm	150 mm	t0.5 = 6 s/ t0.9 = 15 s in water at 0.2 m/s	w171	d652
–	–	6 mm	100 mm	t0.5 = 6 s/ t0.9 = 15 s in water at 0.2 m/s	w171	d652

Wiring diagrams on page 658 Dimension drawing on page 670 Accessories on page 560

Temperature probes – TP series

Highest possible flexibility

A temperature probe has to be flexible and robust. All Pt100 probes of the TP series are therefore mineral-insulated, equipped with a standard process connection and available ex-stock. Moreover, TURCK Pt100 probes are provided in 4-wire technology. The power resistance is thus compensated and a possible influence on the measured value is avoided right from the start when using long cable connections between the probes and the processing units.

High operational safety

The mineral-insulated probes from TURCK are characterized by enormous flexibility and temperature resistance.
Further advantages:
- High accuracy
- Weldability (like a tube)
- Longevity even under extreme conditions (sheathed cables oxidize only on one side and thus achieve double life cycles compared to tubes with the same wall thickness)

Type code

TP	–	103	A	–	G1/8	–	H1	1	4	0	–	L013

TP	Functional principle	–	103	A	Mechanical version	–	G1/8	Process connection	–

Functional principle

TP temperature probe

Accuracy

A accuracy class A

Housing

103 processor unit with probe Ø 3 mm, process connection via standard thread accuracy class A

104 process connection for food applications, probe Ø 4 mm, accuracy class A

203 for compression fitting/ thermowell mounting probe Ø 3 mm, accuracy class A

206 for compression fitting/ thermowell mounting probe Ø 6 mm,

306 cable probe Ø 6 mm

Process connection (only devices with built-on probe)

DN25 DN25 für milk pipe connection DIN 11851

CF connection via compression fitting or thermowell

G1/8 G1/8" male thread

TRI3/4 3/4" Tri-Clamp

H1	1	4	0	Electrical connection	–	L013	Insertion depth

Assignment
0 customized

Number of contacts
4 4 contacts

Connector type
1 straight

Connector type
H1 connector M12 x 1

Probe length in mm

L013	13 mm (only 103A)
L024	25 mm (only 103A)
L035	35 mm (only 104A)
L100	100 mm (only 104A, 203A, 206A)
L150	150 mm (only 203A, 206A)
L200	200 mm (only 203A, 206A)
L250	250 mm (only 203A, 206A)
L300	300 mm (only 203A, 206A)
L1000	1000 mm (only 306A)
L2000	2000 mm (only 306A)
L5000	5000 mm (only 306A)

special lengths on request!

Pt100 temperature probes in 4-wire technology

The core element of the TP series is a Pt 100 measuring resistor in 4-wire technology. All probes are connected to the processing unit via standard male M12 x 1.
Resistance thermometers are used in places where temperatures must be detected and monitored to control and optimize processes. Typical applications are process plants, manufacturing facilities and units as well as air-conditioning systems.

Features

- Pt100 probe acc. to DIN EN 60751
- Vibration and shock-resistant
- Class A for temp. < 350 °C
- Class B for temp. > 350 °C
- Connectable to TS, TT and TC series as well as IM34, BL20 and BL67

Properties

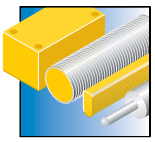

Designs
All types available: With standard process connection, lengths and diameters (3/6 mm), up to freely selectable types

Measuring ranges
-50…+500 °C

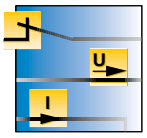

Electrical versions
Pt100 4-wire, other types on request

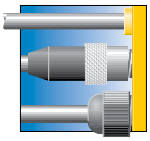

Electrical connections
Male M12 x 1, 4-pin

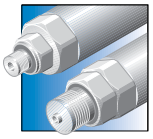

Connectivity
Probes available with standard thread, compression fitting or thermowell

Special features
Mineral-insulated probe, IP68

Internet link
Scan the QR code to access our products on the internet

Hans Turck GmbH & Co. KG ▪ Tel. +49 208 49 52-0 ▪ Fax +49 208 49 52-264

Compact probe – Ø 3 mm – Process connection

General data

Protection class	IP67	**Connection**	male, M12 x 1
Sensor quality	AISI 316L	**Temperature operating range**	-50…120 °C
Mechanical connection	G ⅛" male thread	**Pressure resistance**	100 bar
Housing material	V4A (1.4404)	**Outer diameter**	3 mm
Response time	t0.5 = 1.5 s/ t0.9 = 6.0 s in water at 0.2 m/s	**Accuracy**	Class A

Types and data – selection table

Type	Immersion depth (L)	w	d
TP-103A-G1/8-H1141-L013	13 mm	w172	d653
TP-103A-G1/8-H1141-L024	24 mm	w172	d654

Rod-type probe – Ø 3 mm

General data

Protection class	IP67	**Connection**	male, M12 x 1
Sensor quality	AISI 316L	**Temperature operating range**	-50…500 °C
Mechanical connection	for compression fer-rule fittings, protective tubing or direct mounting	**Pressure resistance**	100 bar
Housing material	V4A (1.4404)	**Outer diameter**	3 mm
Response time	t0.5 = 1.5 s/ t0.9 = 6.0 s in water at 0.2 m/s	**Accuracy**	Class A

Types and data – selection table

Type	Immersion depth (L)	w	d
TP-203A-CF-H1141-L100	100 mm	w172	d655
TP-203A-CF-H1141-L150	150 mm	w172	d655
TP-203A-CF-H1141-L250	250 mm	w172	d655
TP-203A-CF-H1141-L200	200 mm	w172	d655
TP-203A-CF-H1141-L300	300 mm	w172	d655

w Wiring diagrams on page 658 d Dimension drawing on page 670 Accessories on page 560

Rod-type probe – Ø 6 mm

General data

Protection class	IP67	**Connection**	male, M12 x 1
Sensor quality	AISI 316L	**Temperature operating range**	-50…500 °C
Mechanical connection	for compression fer-rule fittings, protective tubing or direct mounting	**Pressure resistance**	100 bar
Housing material	V4A (1.4404)	**Outer diameter**	6 mm
Response time	t0.5 = 6 s/ t0.9 = 15 s in water at 0.2 m/s	**Accuracy**	Class A

Types and data – selection table

Type	Immersion depth (L)	w	d
TP-206A-CF-H1141-L100	100 mm	w172	d656
TP-206A-CF-H1141-L150	150 mm	w172	d656
TP-206A-CF-H1141-L200	200 mm	w172	d656
TP-206A-CF-H1141-L300	300 mm	w172	d656

Cable probe – Ø 6 mm

General data

Protection class	IP67	**Connection**	male, M12 x 1
Sensor quality	AISI 316L	**Temperature operating range**	-50…105 °C
Mechanical connection	for compression fer-rule fittings, protective tubing or direct mounting	**Housing material**	V4A (1.4404)
Outer diameter	6 mm	**Response time**	t0.5 = 8 s/ t0.9 = 20 s in water at 0.2 m/s
Accuracy	Class A		

Types and data – selection table

Type	Immersion depth (L)	w	d
TP-306A-CF-H1141-L1000	1000 mm	w172	d657
TP-306A-CF-H1141-L5000	5000 mm	w172	d657

Wiring diagrams on page 658 Dimension drawing on page 670 Accessories on page 560

Temperature sensors – M18T series

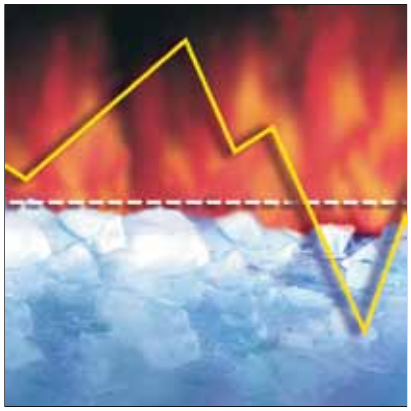

Resistant infrared sensors

Infrared sensors of the M18T series detect heat contactless in a range between 0…+300 °C. The sensors operate as receivers and the objects are the heat emitting sources. The thermal radiation of an object, normally between 8 and 14 µm, is transformed into an electrical signal by a thermopile and then converted into an output signal.
No matter which device you use, the switchpoint as well as the measuring range are easily taught.

Non-contact detection of temperature

The rugged MT18 infrared sensors monitor hot objects such as bakery products, metals or bottles. They also monitor flame brazing, blasting or straightening processes and also hot glueing applied in packaging stations, book binding and product assembly.

- Temperature range 0…+300 °C
- Versions with analog output 0…10 V or switching output
- Easy teaching of measuring range or swichtpoint.
- Compact and rugged stainless steel housing for harsh environments

Infrared sensors M18T

The non-contact sensors of the M18T series are mainly passive receivers. The thermal radiation of an object, normally between 8 and 14 µm, is transformed into an electrical signal in a thermopile and then converted into an output signal. The D:S (distance: spot) ratio, which specifies the spot diameter at a defined distance, is important in this context. To monitor the surface temperature of the object optimally, the spot should be covered completely by the object.
Available are devices with switching output (NO/ PNP) or with analog voltage output 0…10 V. Easy teaching of measuring range or swichtpoint.

Features

- Temperature range 0…+300 °C
- DS-ratio 6:1, 8:1 and 14:1
- Teaching via pushbutton or cable
- Switching output PNP/NPN or analog output 0…10 V/4…20 mA
- Version with analog output: PNP-alarm outputs 10 V/20 mA when reaching the end of the measuring range
- 2 m connection cable or male M12 x 1

Type code M18T

M18T	B	8	Q

M18T	Design	B	Electrical output	8	Special functions

Design

M18T cylinder, smooth
59.2 x 18 mm
65 x 18 mm
78 x 18 mm
83.8 x 18 mm

Electrical output

B PNP/NPN
UP U_o = 0…10V
alarm output, PNP

Special functions

8 distance - spot ratio

Q	Electrical connection

Electrical connection

Q connector, M12 x 1.5-pole

Hans Turck GmbH & Co. KG ▪ Tel. +49 208 49 52-0 ▪ Fax +49 208 49 52-264

M18T – Switching output/analog output

General data

Protection class	IP67	**Connection**	male, M12 x 1
Temperature operating range	0…300 °C	**Housing material**	V2A (1.4301)
Ambient temperature	-20…+70 °C	**Function**	infrared sensor

Types and data – selection table

Type	Operating voltage	Output	D:S ratio	w	d
M18TB8Q	10…30 VDC	_⟋‾, PNP/NPN	8:1	w173	d658
M18TB6EQ	10…30 VDC	_⟋‾, PNP/NPN	6:1	w173	d659
M18TB14Q	10…30 VDC	_⟋‾, PNP/NPN	14:1	w173	d660
M18TIP8Q	12…30 VDC	_⟋‾, PNP/analog output, 4…20 mA	8:1	w174	d658
M18TIP6EQ	12…30 VDC	_⟋‾, PNP/analog output, 4…20 mA	6:1	w174	d659
M18TIP14Q	12…30 VDC	_⟋‾, PNP/analog output, 4…20 mA	14:1	w174	d660
M18TUP8Q	12…30 VDC	_⟋‾, PNP/analog output, 0…10 V	8:1	w175	d658
M18TUP6EQ	12…30 VDC	_⟋‾, PNP/analog output, 0…10 V	6:1	w175	d659
M18TUP14Q	12…30 VDC	_⟋‾, PNP/analog output, 0…10 V	14:1	w175	d660

Many different types available, also with cable, see type code

Inclinometers

Inclinometers – Solutions for any application

No matter if applied in harvesters, agricultural and construction machinery, in vehicles and airplanes or in machines, robots and solar plants: Sensors for measuring and monitoring inclination are universally applicable and help to improve the safety and efficiency of operation processes.
Inclination is defined as the relative angular tilt to the horizon or perpendicular. Inclinometers use the local gravity respectively acceleration of gravity as a reference to measure angular tilt. The measuring principle is similar to that of perpendicular drop, whereby the mass is directly related to the gravitational field. Following this principle, inclinometers use mechanical pendulums, bending beams or liquids like in water-levels.
TURCK inclinometers incorporate a micromechanical pendulum based on MEMS technology (Mikro Elektro Mechanic Systems). The core piece is a capacitive sensor element consisting of two parallel arranged plate electrodes with a dielectric in the middle.
The dielectric of this differential capacitor is designed as a resilient pendulum. If the position of the sensor changes, the dielectric in the middle moves, causing the capacitance ratio between both electrodes to change. This change in capacitance is exactly measured and evaluated to determine the angular tilt.
The extremely rugged TURCK inclinometers are also suited for fast production sequences and withstand impacts. The standard product portfolio comprises rectangular shaped, biaxially operating inclinometers Q20L60, with angular ranges of ±10°, ±45° and ±60°. It also includes devices with analog voltage, current or ratiometric output as well as 20 mm uniaxial versions with freely adjustable measuring range 0°… 360° and analog or digital output.
The Q42 complementing the product range, features a standard CANopen interface (CiA DS-301). These sensors provide baud rates of 10 kbps up to 1 Mbps, high sampling rates and bandwidths as well as a parametrizable vibrostability.

Our strenghts – Your advantages

High repeatability

The Q20L60 series is the right solution for high-precision applications, operating with a repeatability of 0.01 % f.s. Q20L60 and Q42 inclinometers both feature a resolution of up to 0.04°.

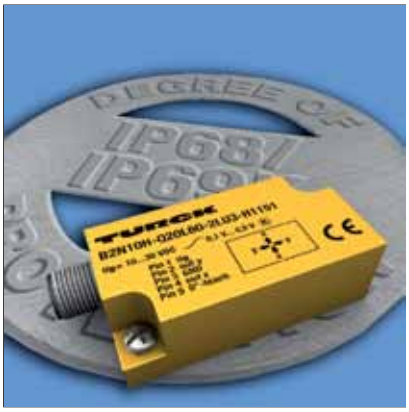

High protection rating

The sensors are IP68 and IP69K protected, fulfilling high requirements such as:

- 24 hrs. continuous storage at +70 °C
- 24 hrs. continuous storage at -25 °C
- 7 days submersed, depth 1 m
- Thermal shock resistant, 10 times +70 °C to -25 °C, dwell cycle per temperature 1 hour.
- Suited for high pressure steam-jet cleaning acc. to DIN 40050-9, following EN 60529

360° freely selectable range

The uniaxial inclinometers operate over the full range of 360° and deliver signals between 4 and 20 mA or 0.1 and 4.9 V corresponding to the angular position. The measuring range is adjusted via teach adapter. Select the start value, then press and hold the teach adapter VB2-SP3 for 1 seconds. Then select the end value, press and hold the teach adapter for 3 seconds.

Hans Turck GmbH & Co. KG ▪ Tel. +49 208 49 52-0 ▪ Fax +49 208 49 52-264

ur advantages

CANopen interface

The inclinometers with CANopen interface (CIA DS-301) provide baud rates of 10 kbps up to 1Mbps, high sampling rates and bandwidths as well as a parametrizable vibrostability.

Easy zero point calibration

The home position (zero point) is easily set with the teach adapter VB2-SP3. Move the sensor in the wanted position, press the teach adapter for just 1 second and the sensor is calibrated!

Programmable switchpoints

The inclinometer with digital output features two programmable switchpoints that can be set with the teach adapter TX1-Q20L60. Different positions at cranes and utility vehicles are thus detected and monitored for example.

Type code

B2N	10	H	–	Q20	L60	–	2	UP	6	X3	–	H1	1	5	1

B2N	10	H	Functional principle	–	Q20	L60	Additional information	–	2	UP	6	X3	Electrical version	–

Mounting

H	horizontal
V	vertical

Optional features

10	-10…+10°
45	-45…+45°
60	-60…+60°
360	0…360°

Functional principle

B1N	inclinometer, uniaxial
B2N	inclinometer, biaxial

Additional information Housing

L	length of housing

Housing

Q20	rectangular, height 20 mm
Q42	rectangular, height 42 mm

Indication

X…	number of LEDs or multicolor LED

Voltage range

6	10…30 VDC, Ⓚ

Output function

CN	CANopen interface
UP	switching output parameterizable
LI2	analog output 4…20 mA
LU3	analog output 0.1…4.9 V

Number of outputs

blank	1 output
2	2 outputs

H1	1	5	1	Electrical connection

Assignment
1 standard assignment

Number of contacts
… … contacts

Connector type
1 straight
3 straight, with adapter

Connector type
H1 connector M12 x 1

Designs and variants

	Design	Connection	Output	Page
Biaxial standard series with analog outputs	Rectangular Q20L60 30 x 20 x 60 mm	Male, M12 x 1	0.1...4.9 V 4...20 mA	489
Uniaxial 360°, with adjustable measuring range	Rectangular Q20L60 30 x 20 x 60 mm	Male, M12 x 1	4...20 mA 0.1...4.9 V	489
Uniaxial 360° with two programmable switchpoints	Rectangular Q20L60 30 x 20 x 60 mm	Male, M12 x 1		490
Uniaxial or biaxial – CANopen interface	Rectangular Q42 52 x 42 x 68 mm	M12 x 1	–	490

Hans Turck GmbH & Co. KG ▪ Tel. +49 208 49 52-0 ▪ Fax +49 208 49 52-264

ts and variants

Inclinometers for many applications

The standard product portfolio comprises rectangular shaped, biaxially operating inclinometers Q20L60, with angular ranges of ±10°, ±45° and ±60°. It also includes devices with analog voltage, current or ratiometric output as well as 20 mm uniaxial versions with freely adjustable measuring range 0°… 360° and analog or digital output.
The Q42 complementing the product range, features a standard CANopen interface (CiA DS-301). The inclinometers provide baud rates of 10 kbps up to 1Mbps, high sampling rates and bandwidths as well as a parametrizable vibrostability.

Features

- Compact rectangular design
- High-speed measurement
- Long-term stable and reliable
- Zero point calibration
- High protection classes IP68 and IP69K
- Extremely robust
- Optimum alignment
- Adjustable measuring range
- Adjustable switchpoints
- Easily mounted

Properties

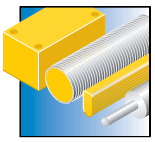

Designs
Compact housing, 20 mm and 42 mm high

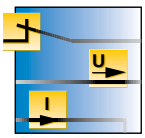

Electrical versions
Digital as well as analog current and voltage outputs

Measuring ranges
Angular ranges ±10°, ±45°, ±60°, ±85° and 360°

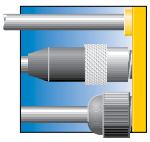

Electrical connections
Male M12 x 1 for easy installation

Materials
Rugged plastic housings, fully encapsulated, chemical-resistant

Special features
Zero point calibration and adjustment of measuring range

Internet link
Scan the QR code to access our products on the internet

Hans Turck GmbH & Co. KG ▪ Tel. +49 208 49 52-0 ▪ Fax +49 208 49 52-264

Biaxial standard series with analog outputs

General data

Protection class	IP68 / IP69K	**Connection**	male, M12 x 1
Operating voltage	10…30 VDC	**Housing material**	PC
Ambient temperature	-30…+70 °C	**Dimensions**	30 x 20 x 60 mm
Repeatability	0.2 % of measuring range |A - B|		

Types and data – selection table

Type	Measuring range	Output	Absolute accuracy (at 25 °C)	Temperature coefficient typical	Resolution	w	d
B2N10H-Q20L60-2LU3-H1151	-10…10°	0.1…4.9 V	+/- 0.3°	0.01°/K	< 0.04°	w176	d661
B2N45H-Q20L60-2LU3-H1151	-45…45°	0.1…4.9 V	+/- 0.5°	0.03°/K	< 0.1°	w176	d661
B2N60H-Q20L60-2LU3-H1151	-60…60°	0.1…4.9 V	+/- 0.5°	0.03°/K	< 0.14°	w176	d661
B2N85H-Q20L60-2LU3-H1151	-85…85°	0.1…4.9 V	+/- 0.5°	0.03°/K	< 0.14°	w176	d661
B2N10H-Q20L60-2LI2-H1151	-10…10°	4…20 mA	+/- 0.3°	0.01°/K	< 0.04°	w177	d661
B2N45H-Q20L60-2LI2-H1151	-45…45°	4…20 mA	+/- 0.5°	0.03°/K	< 0.1°	w177	d661
B2N60H-Q20L60-2LI2-H1151	-60…60°	4…20 mA	+/- 0.5°	0.03°/K	< 0.14°	w177	d661
B2N85H-Q20L60-2LI2-H1151	-85…85°	4…20 mA	+/- 0.5°	0.03°/K	< 0.14°	w177	d661

Uniaxial 360°, with adjustable measuring range

General data

Measuring range	0…360°	**Protection class**	IP68 / IP69K
Connection	male, M12 x 1	**Operating voltage**	10…30 VDC
Housing material	PC	**Ambient temperature**	-30…+70 °C
Dimensions	30 x 20 x 60 mm	**Temperature coefficient typical**	0.03°/K
Resolution	< 0.14°	**Repeatability**	0.2 % of measuring range |A - B|

Types and data – selection table

Type	Output	w	d
B1N360V-Q20L60-2LI2-H1151	4…20 mA	w178	d661
B1N360V-Q20L60-2LU3-H1151	0.1…4.9 V	w179	d661

w Wiring diagrams on page 658 d Dimension drawing on page 670 Accessories on page 560

Uniaxial 360° with two programmable switchpoints

General data

Measuring range	0…360°	**Protection class**	IP68 / IP69K
Connection	male, M12 x 1	**Operating voltage**	10…30 VDC
Output	__/__	**Housing material**	PC
Ambient temperature	-30…+70 °C	**Dimensions**	30 x 20 x 60 mm
Absolute accuracy (at 25 °C)	+/- 0.5°	**Temperature coefficient typical**	0.03°/K
Resolution	< 0.14°		

Types and data – selection table

Type	w	d
B1N360V-Q20L60-2UP6X3-H1151	w180	d661

Uniaxial or biaxial – CANopen interface

General data

Protection class	IP68 / IP69K	**Connection**	M12 x 1
Operating voltage	10…30 VDC	**Housing material**	PA12-GF30
Ambient temperature	-40…+80 °C	**Dimensions**	52 x 42 x 68 mm
Temperature coefficient typical	0.008°/K	**Resolution**	< 0.01°

Types and data – selection table

Type	Measuring range	Absolute accuracy (at 25 °C)	w	d
B2N10H-Q42-CNX2-2H1150	0…10°	+/- 0.05°	w181	d662
B2N45H-Q42-CNX2-2H1150	0…45°	+/- 0.05°	w181	d662
B2N60H-Q42-CNX2-2H1150	0…60°	+/- 0.05°	w181	d662
B1N360V-Q42-CNX2-2H1150	0…360°	+/- 0.1°	w181	d662

Wiring diagrams on page 658 Dimension drawing on page 670 Accessories on page 560

Linear position sensors

Linear position sensors – Wear-free measurement of path and position

Position measuring systems are available in most varying designs and for many different applications. The aim is to optimize production processes, simplify quality assurance and reduce production costs and failure rates.
The application possibilities are many and varied. High repeatability and linearity, simple installation, a rugged design and wear-free measurement, last but not least a large measuring range and short blind zones are the features which an industrial-suited position detection system should have.
The new LI series of inductive linear position sensors can replace expensive magnetostrictive position detection systems as well as cheap but susceptible potentiometers. Thanks to a new revolutionary measuring principle, position is not detected via a positioning magnet but via an inductive oscillating circuit. The sensor is thus completely immune to magnetic fields generated by large motors for example.
Injection moulding or metal processing are typical applications for LI sensors. Metal chips or external magnetic fields, both strongly impair the functionality of positioning magnets. The customer always gets the perfect solution – regardless of whether short range measurements of 25 mm or long range measurements of up to 1000 mm need to be implemented.
The WIM-Q25L sensors are magnetically actuated and feature measuring ranges of up to 200 mm. Working on the basis of the Hall principle, they achieve high linearity and repeatability and have extremely short blind zones. The magnet of WIM sensors is axially magnetized, allowing the sensors to be mounted directly on pneumatic cylinders, flow meters or hydraulic valves.
The LTX-R10 are magnetostrictive sensors, optimized for precise position control in hydraulic cylinders. They can also be used for level control when combined with optionally available floating magnets. Being very rugged and operating with absolute values, they need not be reset to zero.

Inductive linear position sensors

Inductive linear position sensors

The new Li…-Q25L inductive linear position sensors operate on the basis of a completely new, revolutionary measuring principle, combining the positive features of standard measuring systems. Position is not detected via a positioning magnet but via an inductive oscillating circuit, making the devices completely immune to magnetic fields, such as generated by large motors for example. The new sensors operate wear-free, feature short blind zones and excellent EMC properties. The measuring range is adjusted via pushbutton. Thanks to the extremely short blind zones, the sensors are very compactly shaped.

Rugged and leakproof housing

Sensors of the Li-Q25L series are built in an aluminium cast housing with a high-quality plastic inlay. They are available in lengths from 100 mm to 1000 mm. The compact Li-Q17L as well as the LiQR14 series are built in a highly tight plastic housing, resisting many aggressive substances. They are available in different lengths from 50 mm to 200 mm (series Li-Q17L) or 25 mm (LiQR14)

Short blind zones

Very short blind zones provide highest mounting flexibility for many different applications. Even when mounted in confined spaces, the entire measuring range is exploitable. The measuring range of the devices with analog output is either pin-programed or set via teach adapter within seconds. The teach-in process is comfortably controlled via LED at the sensor.

sition sensors

Flexible process connection

Different output types such as analog current or voltage but also SSI enable connection to the higher level control system. The signal is thus easily coupled to different fieldbuses using the TURCK remote I/O systems for example. A standard male M12 x 1 makes the use of other special connectors redundant. In addition, we also offer IO-Link operable sensors.

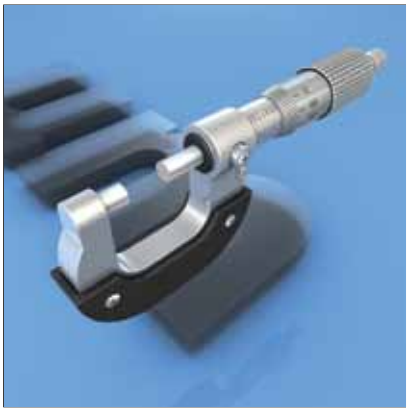

Highest accuracy

The standard version already achieves a very high degree of linearity and repeatability, sufficient for most applications. If the standard version should not comply with your demands in this respect, the high-end series does. Frequency converters, large motors, ferrous metals or permanent magnets are no problem at all. Inductive RLC coupling makes the sensors immune to magnetic fields and provides excellent EMC properties. Mechanical interferences are also hold off. The distance between sensor and positioning element as well as vibration and roughness in the guidance have no effect on the output signal.

Magnetic linear position sensors

The WIM-Q25L series of magnetically actuated linear position sensors features measuring ranges of up to 200 mm. Working on the basis of the Hall principle, they achieve high linearity and repeatability and have extremely short blind zones. The Q25L series is thus perfectly suited for applications requiring precise signal transmission over long distances, such as in pneumatic pumps, slides, blanking or moulding systems.

Type code

Li 100 P1 – Q25L M1 – 2 LiUPN8 X3 – H1 1 5 1 – S97

Li 100 P1 Inductive linear position sensor

Positioning element

- **P0** without positioning element
- **P1** P1-Li-Q25L or P1-Li-QR14/Q17L
- **P2** P2-Li-Q25L
- **P3** P3-Li-Q25L
- **P4** P4-Li-Q25L

Measuring range (mm)

- **Q25L** 00 mm …1000 mm, adjustable in steps of 100 mm
- **Q17L** 50 mm, 100 mm, 150 mm, 200 mm, 300 mm

Functional principle

- **Li** Linear inductive

– Q25L M1 Design

Mounting aid

- **M0** withour mounting aid
- **M1** M1-Q25L or M1.1-Q17L/ M1.2-Q17L
- **M2** M2-Q25L
- **M4** M4-Q25L

Design

- **Q25L** rectangular, 25 x 35 mm
- **Q17L** rectangular, 16.5 x 20 mm

– E LiUPN8 X3 Electrical version –

Number of LEDs

- **X2** 2 x LED
- **X3** 3 x LED

Output mode

- **LiUPN8** IO-Link capable, analog output, switching output
- **LiU5** analog output (I/U) 4…20 mA, 0…10 V
- **LU4** analog output (U) 0,5…4,5 V
- **SG24** SSi, Gray 24 Bit
- **SG25** SSI, Gray 25 Bit
- **SG26** SSI, Gray 26 Bit
- **SB24** SSI, binary 24 Bit
- **SB25** SSI, binary 25Bit
- **SB26** SSI, binary 26 Bit

Resolution

- **E** increased resolution
- **HE** increased resolution; high-speed

H1 1 5 1 Electrical connection (Q25L)

Assignment

- **1** standard assignment or customized

Number of contacts

- **5** 5-pole
- **8** 8-pole

Connector type

- **1** straight

Connector type

- **H1** connector M12 x 1

– S97 Special version (Q17L)

Special version

- **S97** extended temperature range -40…+70 °C, only with electrical version LU4

0,3-RS5 Electrical connection (Q17L) –

Electrical connection cable

- **0,3-RS5** cable 0.3 m, male M12 x 1
- **–** cable 2 m, open end

Hans Turck GmbH & Co. KG ▪ Tel. +49 208 49 52-0 ▪ Fax +49 208 49 52-264

WIM 200 – Q25L – LIU5 X2 – H1 1 5 1

WIM 200 Functional principle – **Q25L** Design – **LIU5 X2** Electrical version –

Measuring range
200 range in mm

Functional principle
WIM magnet-actuated Hall elements, axially polarized in direction of motion

Housing
Q25L rectangular 25 x 35 mm

Indication
X2 2 x LED

Output function
LIU5 analog output (I/U) 4…20 mA, 0…10 V

H1 1 4 1 Electrical connection

Assignment
1 standard assignment or customized

Number of contacts
4 4-pole

Connector type
1 straight

Connector type
H1 connector M12 x 1

Designs and variants

	Design	Connection	Output	Page
Li-QR14 and Li-Q17L – Compact series with current and voltage output	Rectangular QR14 Rectangular Q17L 49 x 14 x 53.5 mm 20 x 16.5 x 88 mm 20 x 16.5 x 131 mm 20 x 16.5 x 181 mm 20 x 16.5 x 231 mm 20 x 16.5 x 331 mm	2 m cable 0.3 m cable with connector, M12 x 1	Analog output, 4...20 mA, 0...10 V Analog output, 0.5...4.5 V	501, 502
Li-Q25L – Standard series with current and voltage output	Rectangular Q25L 35 x 25 x 158 mm 35 x 25 x 258 mm 35 x 25 x 358 mm 35 x 25 x 458 mm 35 x 25 x 558 mm 35 x 25 x 658 mm 35 x 25 x 758 mm 35 x 25 x 858 mm 35 x 25 x 958 mm 35 x 25 x 1058 mm	male, M12 x 1	Analog output, 4...20 mA, 0...10 V	503
Li-Q25L – High-end E-series with SSI interface	Rectangular Q25L 35 x 25 x 158 mm 35 x 25 x 258 mm 35 x 25 x 358 mm 35 x 25 x 458 mm 35 x 25 x 558 mm 35 x 25 x 658 mm 35 x 25 x 758 mm 35 x 25 x 858 mm 35 x 25 x 958 mm 35 x 25 x 1058 mm	male, M12 x 1	SSi, 25 Bit, Gray	503
Li-Q25L – High-end H-series with high-speed SSI interface	Rectangular Q25L 35 x 25 x 158 mm 35 x 25 x 258 mm 35 x 25 x 358 mm 35 x 25 x 458 mm 35 x 25 x 558 mm 35 x 25 x 658 mm 35 x 25 x 758 mm 35 x 25 x 858 mm 35 x 25 x 958 mm 35 x 25 x 1058 mm	male, M12 x 1	SSi, 25 Bit, Gray, synchron	504

Hans Turck GmbH & Co. KG ▪ Tel. +49 208 49 52-0 ▪ Fax +49 208 49 52-264

ts and variants

	Design	Connection	Output	Page
Li-Q25L – High-end E-series, IO-Link capable	Rectangular Q25L 35 x 25 x 158 mm 35 x 25 x 258 mm 35 x 25 x 358 mm 35 x 25 x 458 mm 35 x 25 x 558 mm 35 x 25 x 658 mm 35 x 25 x 758 mm 35 x 25 x 858 mm 35 x 25 x 958 mm 35 x 25 x 1058 mm	male, M12 x 1	PNP/NPN, Analog output, 4...20 mA, 0...10 V	505
WIM-Q25L with current and voltage output	Rectangular Q25L 35 x 25 x 141 mm 35 x 25 x 166 mm 35 x 25 x 201 mm 35 x 25 x 241 mm	male, M12 x 1	Analog output, 4...20 mA, 0...10 V	507
WIM-Q25L with current output, intrinsically safe, loop-powered	Rectangular Q25L 35 x 25 x 141 mm 35 x 25 x 166 mm 35 x 25 x 201 mm 35 x 25 x 241 mm	male, M12 x 1	Analog output, 4...20 mA	507

Inductive linear position sensors

The inductive linear position sensors are available with measuring ranges from 100 mm to 1000 mm. They operate wear-free, feature short blind zones and excellent EMC properties. The devices are available with analog output (4…20 mA and 0…10 V) or SSi interface. The measuring range is adjusted via pushbutton. Thanks to the extremely short blind zones, they are also very compact. In addition, the IO-Link capable version can be parametrized with switching outputs.

Features

- Li-Q25L: Rugged aluminium strand cast housing and watertight polycarbonate inlay
- Li-Q17L: Fully encapsulated plastic housing
- Many mounting possibilities
- Programmable measuring range
- Standard male M12 x 1, 5-pole
- Measuring range indicated via LED
- Immune to external magnetic fields
- Extremely short blind zones

Properties

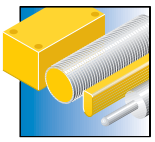

Designs
Compact design, short blind zones

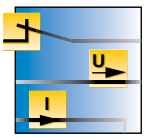

Electrical versions
Analog outputs 4…20 mA, 0…10 V, IO-Link , SSI interface

Measuring ranges
Smallest version 25 mm, largest 1000 mm

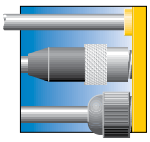

Electrical connections
Proven male M12 x 1 connection for easy installation

Materials
Closed housing, protection rating IP68

Special features
Teachable measuring range

Internet link
Scan the QR code to access our products on the internet

Hans Turck GmbH & Co. KG ▪ Tel. +49 208 49 52-0 ▪ Fax +49 208 49 52-264

Li-QR14 and Li-Q17L – Compact series with current and voltage output, 2 m cable

General data

Linearity deviation	0.5 % of full scale	**LED**	●
Protection class	IP67	**Connection**	2 m cable
Description	Rectangular, plastic	**Temperature drift**	0.01 % / K
Resolution	12 bit		

Positioning element and mounting aids included in delivery

Types and data – selection table

Type	Measuring range	Operating voltage	Output	Ambient temperature	Dimensions	w	d
LI25P1-QR14-LIU5X2	25 mm	15…30 VDC	Analog output, 4…20 mA, 0…10 V	-25…+70 °C	49 x 14 x 53.5 mm	w182	d663
LI25P1-QR14-LU4X2/S97	25 mm	8…30 VDC	Analog output, 0.5…4.5 V	-40…+70 °C	49 x 14 x 53.5 mm	w054	d663
LI50P1-Q17LM1-LIU5X2	50 mm	15…30 VDC	Analog output, 4…20 mA, 0…10 V	-25…+70 °C	20 x 16.5 x 88 mm	w183	d664
LI50P1-Q17LM1-LU4X2/S97	50 mm	8…30 VDC	Analog output, 0.5…4.5 V	-40…+70 °C	20 x 16.5 x 88 mm	w184	d664
LI100P1-Q17LM1-LIU5X2	100 mm	15…30 VDC	Analog output, 4…20 mA, 0…10 V	-25…+70 °C	20 x 16.5 x 131 mm	w183	d665
LI100P1-Q17LM1-LU4X2/S97	100 mm	8…30 VDC	Analog output, 0.5…4.5 V	-40…+70 °C	20 x 16.5 x 131 mm	w184	d665
LI150P1-Q17LM1-LIU5X2	150 mm	15…30 VDC	Analog output, 4…20 mA, 0…10 V	-25…+70 °C	20 x 16.5 x 181 mm	w183	d666
LI150P1-Q17LM1-LU4X2/S97	150 mm	8…30 VDC	Analog output, 0.5…4.5 V	-40…+70 °C	20 x 16.5 x 181 mm	w184	d666
LI200P1-Q17LM1-LIU5X2	200 mm	15…30 VDC	Analog output, 4…20 mA, 0…10 V	-25…+70 °C	20 x 16.5 x 231 mm	w183	d667
LI200P1-Q17LM1-LU4X2/S97	200 mm	8…30 VDC	Analog output, 0.5…4.5 V	-40…+70 °C	20 x 16.5 x 231 mm	w184	d667
LI300P1-Q17LM1-LIU5X2	300 mm	15…30 VDC	Analog output, 4…20 mA, 0…10 V	-25…+70 °C	20 x 16.5 x 331 mm	w183	d668
LI300P1-Q17LM1-LU4X2/S97	300 mm	8…30 VDC	Analog output, 0.5…4.5 V	-40…+70 °C	20 x 16.5 x 331 mm	w184	d668

w Wiring diagrams on page 658 d Dimension drawing on page 670 Accessories on page 560

Li-QR14 and Li-Q17L – Compact series with current and voltage output, cable with male end 0.3 m

General data

Linearity deviation	0.5 % of full scale	**LED**	●
Protection class	IP67	**Connection**	0.3 m Cable with connector, M12 x 1
Description	Rectangular, plastic	**Temperature drift**	0.01 % / K
Resolution	12 bit		

Positioning element and mounting aids included in delivery

Types and data – selection table

Type	Measuring range	Operating voltage	Output	Ambient temperature	Dimensions	w	d
LI25P1-QR14-LIU5X2-0,3-RS4	25 mm	15…30 VDC	Analog output, 4…20 mA, 0…10 V	-25…+70 °C	49 x 14 x 53.5 mm	w185	d669
LI25P1-QR14-LU4X2-0,3-RS4/S97	25 mm	8…30 VDC	Analog output, 0.5…4.5 V	-40…+70 °C	49 x 14 x 53.5 mm	w186	d669
LI50P1-Q17LM1-LIU5X2-0,3-RS5	50 mm	15…30 VDC	Analog output, 4…20 mA, 0…10 V	-25…+70 °C	20 x 16.5 x 88 mm	w187	d670
LI50P1-Q17LM1-LU4X2-0,3-RS5/S97	50 mm	8…30 VDC	Analog output, 0.5…4.5 V	-40…+70 °C	20 x 16.5 x 88 mm	w188	d670
LI100P1-Q17LM1-LIU5X2-0,3-RS5	100 mm	15…30 VDC	Analog output, 4…20 mA, 0…10 V	-25…+70 °C	20 x 16.5 x 131 mm	w187	d671
LI100P1-Q17LM1-LU4X2-0,3-RS5/S97	100 mm	8…30 VDC	Analog output, 0.5…4.5 V	-40…+70 °C	20 x 16.5 x 131 mm	w188	d671
LI150P1-Q17LM1-LIU5X2-0,3-RS5	150 mm	15…30 VDC	Analog output, 4…20 mA, 0…10 V	-25…+70 °C	20 x 16.5 x 181 mm	w187	d672
LI150P1-Q17LM1-LU4X2-0,3-RS5/S97	150 mm	8…30 VDC	Analog output, 0.5…4.5 V	-40…+70 °C	20 x 16.5 x 181 mm	w188	d672
LI200P1-Q17LM1-LIU5X2-0,3-RS5	200 mm	15…30 VDC	Analog output, 4…20 mA, 0…10 V	-25…+70 °C	20 x 16.5 x 231 mm	w187	d673
LI200P1-Q17LM1-LU4X2-0,3-RS5/S97	200 mm	8…30 VDC	Analog output, 0.5…4.5 V	-40…+70 °C	20 x 16.5 x 231 mm	w188	d673
LI300P1-Q17LM1-LIU5X2-0,3-RS5	300 mm	15…30 VDC	Analog output, 4…20 mA, 0…10 V	-25…+70 °C	20 x 16.5 x 331 mm	w187	d674
LI300P1-Q17LM1-LU4X2-0,3-RS5/S97	300 mm	8…30 VDC	Analog output, 0.5…4.5 V	-40…+70 °C	20 x 16.5 x 331 mm	w188	d674

Li-Q25L – Standard series with current and voltage output

General data

LED	●	**Protection class**	IP67
Connection	male, M12 x 1	**Description**	rectangular, aluminium / plastic
Operating voltage	15…30 VDC	**Output**	Analog output, 4…20 mA, 0…10 V
Ambient temperature	-25…+70 °C	**Temperature drift**	0.003 % / K
Resolution	12 bit		

For more details on mounting aids and positioning elements see chapter „Accessories“

Types and data – selection table

Type	Linearity deviation	Measuring range	Dimensions	w	d
LI100P0-Q25LM0-LIU5X3-H1151	0.1 % of full scale	100 mm	35 x 25 x 158 mm	w187	d675
LI200P0-Q25LM0-LIU5X3-H1151	0.1 % of full scale	200 mm	35 x 25 x 258 mm	w187	d675
LI300P0-Q25LM0-LIU5X3-H1151	0.1 % of full scale	300 mm	35 x 25 x 358 mm	w187	d675
LI400P0-Q25LM0-LIU5X3-H1151	0.075 % of full scale	400 mm	35 x 25 x 458 mm	w187	d675
LI500P0-Q25LM0-LIU5X3-H1151	0.07 % of full scale	500 mm	35 x 25 x 558 mm	w187	d675
LI600P0-Q25LM0-LIU5X3-H1151	0.065 % of full scale	600 mm	35 x 25 x 658 mm	w187	d675
LI700P0-Q25LM0-LIU5X3-H1151	0.065 % of full scale	700 mm	35 x 25 x 758 mm	w187	d675
LI800P0-Q25LM0-LIU5X3-H1151	0.06 % of full scale	800 mm	35 x 25 x 858 mm	w187	d675
LI900P0-Q25LM0-LIU5X3-H1151	0.06 % of full scale	900 mm	35 x 25 x 958 mm	w187	d675
LI1000P0-Q25LM0-LIU5X3-H1151	0.056 % of full scale	1000 mm	35 x 25 x 1058 mm	w187	d675

Devices with included mounting aids and positioning elements available, see type code

Li-Q25L – High-end E-series with SSI interface

General data

LED	●	**Protection class**	IP67
Connection	male, M12 x 1	**Description**	rectangular, aluminium / plastic
Operating voltage	15…30 VDC	**Output**	SSi, 25 Bit, Gray coded
Ambient temperature	-25…+70 °C	**Temperature drift**	0.0001 % / K

For more details on mounting aids and positioning elements see chapter „Accessories“

Types and data – selection table

Type	Linearity deviation	Measuring range	Dimensions	w	d
LI100P0-Q25LM0-ESG25X3-H1181	0.1 % of full scale	100 mm	35 x 25 x 158 mm	w189	d675
LI200P0-Q25LM0-ESG25X3-H1181	0.1 % of full scale	200 mm	35 x 25 x 258 mm	w189	d675
LI300P0-Q25LM0-ESG25X3-H1181	0.07 % of full scale	300 mm	35 x 25 x 358 mm	w189	d675
LI400P0-Q25LM0-ESG25X3-H1181	0.05 % of full scale	400 mm	35 x 25 x 458 mm	w189	d675
LI500P0-Q25LM0-ESG25X3-H1181	0.05 % of full scale	500 mm	35 x 25 x 558 mm	w189	d675
LI600P0-Q25LM0-ESG25X3-H1181	0.04 % of full scale	600 mm	35 x 25 x 658 mm	w189	d675

Table continues on the next page…

… Table starts on previous page

Type	Linearity deviation	Measuring range	Dimensions	w	d
LI700P0-Q25LM0-ESG25X3-H1181	0.04 % of full scale	700 mm	35 x 25 x 758 mm	w189	d675
LI800P0-Q25LM0-ESG25X3-H1181	0.035 % of full scale	800 mm	35 x 25 x 858 mm	w189	d675
LI900P0-Q25LM0-ESG25X3-H1181	0.035 % of full scale	900 mm	35 x 25 x 958 mm	w189	d675
LI1000P0-Q25LM0-ESG25X3-H1181	0.035 % of full scale	1000 mm	35 x 25 x 1058 mm	w189	d675

Devices with included mounting aids and positioning elements available, see type code

Li-Q25L – High-end H-series with high-speed SSI interface

General data

LED	●	**Protection class**	IP67
Connection	male, M12 x 1	**Description**	rectangular, aluminium / plastic
Operating voltage	15…30 VDC	**Output**	SSi, 25 Bit, Gray, synchronous
Ambient temperature	-25…+70 °C	**Temperature drift**	0.0001 % / K

For more details on mounting aids and positioning elements see chapter „Accessories“

Types and data – selection table

Type	Linearity deviation	Measuring range	Dimensions	w	d
LI100P0-Q25LM0-HESG25X3-H1181	0.1 % of full scale	100 mm	35 x 25 x 158 mm	w189	d675
LI200P0-Q25LM0-HESG25X3-H1181	0.1 % of full scale	200 mm	35 x 25 x 258 mm	w189	d675
LI300P0-Q25LM0-HESG25X3-H1181	0.07 % of full scale	300 mm	35 x 25 x 358 mm	w189	d675
LI400P0-Q25LM0-HESG25X3-H1181	0.05 % of full scale	400 mm	35 x 25 x 458 mm	w189	d675
LI500P0-Q25LM0-HESG25X3-H1181	0.05 % of full scale	500 mm	35 x 25 x 558 mm	w189	d675
LI600P0-Q25LM0-HESG25X3-H1181	0.04 % of full scale	600 mm	35 x 25 x 658 mm	w189	d675
LI700P0-Q25LM0-HESG25X3-H1181	0.04 % of full scale	700 mm	35 x 25 x 758 mm	w189	d675
LI800P0-Q25LM0-HESG25X3-H1181	0.035 % of full scale	800 mm	35 x 25 x 858 mm	w189	d675
LI900P0-Q25LM0-HESG25X3-H1181	0.035 % of full scale	900 mm	35 x 25 x 958 mm	w189	d675
LI1000P0-Q25LM0-HESG25X3-H1181	0.035 % of full scale	1000 mm	35 x 25 x 1058 mm	w189	d675

Li-Q25L – High-end E-series, IO-Link capable

General data

LED	●	**Protection class**	IP67
Connection	male, M12 x 1	**Description**	rectangular, aluminium / plastic
Operating voltage	15…30 VDC	**Output**	⎯⎺⎺/⎽⊥⎺⎺, PNP/NPN, analog output, 4…20 mA, 0…10 V
Ambient temperature	-25…+70 °C	**Temperature drift**	0.003 % / K
Resolution	16 bit		

For more details on mounting aids and positioning elements see chapter „Accessories“

Types and data – selection table

Type	Linearity deviation	Measuring range	Dimensions	w	d
LI100P0-Q25LM0-ELIUPN8X3-H1151	0.1 % of full scale	100 mm	35 x 25 x 158 mm	w190	d675
LI200P0-Q25LM0-ELIUPN8X3-H1151	0.1 % of full scale	200 mm	35 x 25 x 258 mm	w190	d675
LI300P0-Q25LM0-ELIUPN8X3-H1151	0.07 % of full scale	300 mm	35 x 25 x 358 mm	w190	d675
LI400P0-Q25LM0-ELIUPN8X3-H1151	0.05 % of full scale	400 mm	35 x 25 x 458 mm	w190	d675
LI500P0-Q25LM0-ELIUPN8X3-H1151	0.05 % of full scale	500 mm	35 x 25 x 558 mm	w190	d675
LI600P0-Q25LM0-ELIUPN8X3-H1151	0.04 % of full scale	600 mm	35 x 25 x 658 mm	w190	d675
LI700P0-Q25LM0-ELIUPN8X3-H1151	0.04 % of full scale	700 mm	35 x 25 x 758 mm	w190	d675
LI800P0-Q25LM0-ELIUPN8X3-H1151	0.035 % of full scale	800 mm	35 x 25 x 858 mm	w190	d675
LI900P0-Q25LM0-ELIUPN8X3-H1151	0.035 % of full scale	900 mm	35 x 25 x 958 mm	w190	d675
LI1000P0-Q25LM0-ELIUPN8X3-H1151	0.035 % of full scale	1000 mm	35 x 25 x 1058 mm	w190	d675

Devices with included mounting aids and positioning elements available, see type code

w Wiring diagrams on page 658 d Dimension drawing on page 670 Accessories on page 560

Magnetic linear position sensors WIM-Q25L

The WIM-Q25L series features magnetically actuated linear position sensors with measuring ranges of up to 200 mm. The sensors work on the basis of the Hall principle which is also used by th compact magnetic field sensors WIM45 with analog output. Typical features are high accuracy and linearity combined with extremely short blind zones. The Q25L sensor series is thus perfectly suited for applications requiring precise signal transmission over long measuring distances, such as in pneumatic pumps, slides, blanking or moulding systems.

Features

- Many mounting possibilities
- Measuring range indicated via LED
- Immune to external magnetic fields
- Extremely short blind zones

Properties

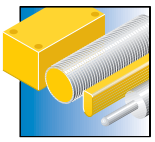

Designs
4 lengths, compact housing, short blind zones

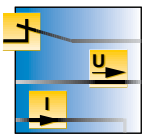

Electrical versions
Analog outputs 4…20 mA and 0…10 V

Measuring ranges
Smallest version 100 mm, largest 200 mm

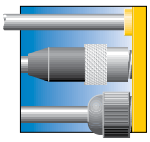

Electrical connections
Proven male M12 x 1 connection for easy installation

Materials
Aluminium strand cast housing with plastic inlay

Special features
Intrinsically safe, loop-powered

Internet link
Scan the QR code to access our products on the internet

Hans Turck GmbH & Co. KG ▪ Tel. +49 208 49 52-0 ▪ Fax +49 208 49 52-264

WIM-Q25L with current and voltage output

General data

Linearity deviation	1 % of full scale	**LED**	●
Protection class	IP67	**Connection**	male, M12 x 1
Description	rectangular, aluminium / plastic	**Operating voltage**	15…30 VDC
Output	Analog output, 4…20 mA, 0…10 V	**Ambient temperature**	-25…+70 °C
Temperature drift	0.006 % / K	**Resolution**	10 bit

For more details on mounting aids and positioning elements see chapter „Accessories“

Types and data – selection table

Type	Measuring range	Dimensions	w	d
WIM100-Q25L-LIU5X2-H1141	100 mm	35 x 25 x 141 mm	w185	d676
WIM125-Q25L-LIU5X2-H1141	125 mm	35 x 25 x 166 mm	w185	d676
WIM160-Q25L-LIU5X2-H1141	160 mm	35 x 25 x 201 mm	w185	d676
WIM200-Q25L-LIU5X2-H1141	200 mm	35 x 25 x 241 mm	w185	d676

WIM-Q25L with current output, intrinsically safe, loop-powered

General data

Linearity deviation	1 % of full scale	**Protection class**	IP67
Connection	male, M12 x 1	**Description**	rectangular, aluminium / plastic
Operating voltage	14…30 VDC	**Output**	Analog output, 4…20 mA
Ambient temperature	-25…+65 °C	**Temperature drift**	0.03 % / K
Resolution	10 bit		

For more details on mounting aids and positioning elements see chapter „Accessories“

Types and data – selection table

Type	Measuring range	Dimensions	w	d
WIM100-Q25L-LI-EXI-H1141	100 mm	35 x 25 x 141 mm	w191	d676
WIM125-Q25L-LI-EXI-H1141	125 mm	35 x 25 x 166 mm	w191	d676
WIM160-Q25L-LI-EXI-H1141	160 mm	35 x 25 x 201 mm	w191	d676
WIM200-Q25L-LI-EXI-H1141	200 mm	35 x 25 x 241 mm	w191	d676

w Wiring diagrams on page 658 d Dimension drawing on page 670 Accessories on page 560

Magnetostrictive linear position sens

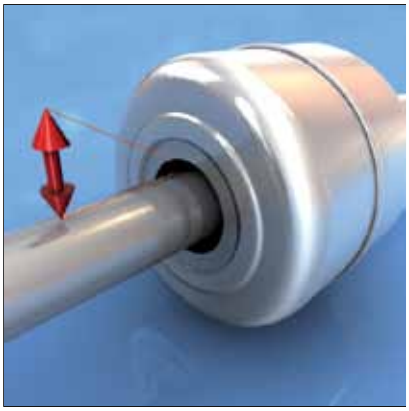

Contactless and wear-free detection

The principle of magnetostrictive measuring works entirely contactless and wear-free. Important features such as accuracy, linearity and tightness are conserved for life and guarantee faultless operation of the sensor at all times.

Rugged housing and easy mounting

The compact LTX sensor is IP68 rated and resistant to many chemicals and oils. The rod is made of high-grade stainless steel and protects optimally against aggressive media.

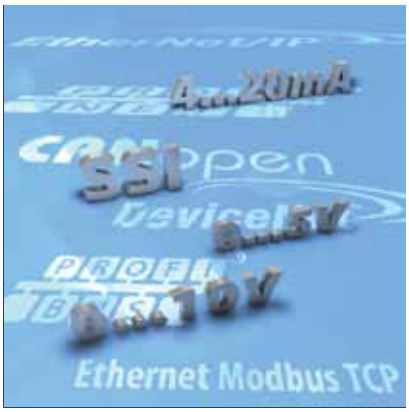

Flexible process connection

The LTX is available with different outputs: You can choose between analog outputs 0…10 V and 4…20 mA and an SSI interface. The sensor is connected via male M12 x 1, other special connectors are not required.

Hans Turck GmbH & Co. KG ▪ Tel. +49 208 49 52-0 ▪ Fax +49 208 49 52-264

near position sors

Highest accuracy

High-quality components and an innovative quality management provide highly precise measured signals and form the basis for excellent linearity and repeatability. Even the most demanding applications are economically and technically feasible with TURCK linear position sensors.

Shock and vibration proof

The extremely rugged construction guarantees high stability when exposed to vibration and other mechanical loads. They are resistant to vibration 30 g RMS and shock 1000 g RMS, even under heavy use and thus prevent interferences and machine downtimes.

Programmable measuring range:

The LTX can be taught any desired measuring range, easily and precise. This allows you to reduce the stock of different device versions sustainably.

Type code

LTX	25	M	–	R10	–	LI0	X3	–	H1	1	5	1

LTX	25	M	Magnetostrictive Linear position sensor	–	R10	Housing	–	LI0	X3	Electrical version	–

Unit
M Millimeter

Measuring range
25 Measuring range 25…7500 mm, adjustable in 25 mm steps

Functional principle
LTX Linear position sensors

Housing
R10 Rod Ø 10,3 mm

Number of LED
X3 3 x LED

Output type
LU0 0…10 V
LI0 4…20 mA

H1	1	5	1	Electrical connection

Assignment
1 Standard assignment

Number of contacts
5 5-pole

Connector type
1 straight

Connector type
H1 connector M12 x 1

Hans Turck GmbH & Co. KG ▪ Tel. +49 208 49 52-0 ▪ Fax +49 208 49 52-264

LTX 25 M – R10 – SSI 1 – B S F 1 – X3 A – H1 1 6 1

LTX 25 M Magnetostrictive Linear position sensor – **R10** Housing –

Unit
M Millimeter

Measuring range
25 Measuring range 25…7500 mm, adjustable in 25 mm steps

Functional principle
LTX Linear position sensors

Housing
R10 Rod Ø 10,3 mm

SSI 1 – B S F 1 – X3 Electrical version – **H1 1 6 1** Electrical connection

Number of LED
X3 3 x LED

Resolution
1 0.005 mm
2 0.01 mm
3 0.05 mm
4 0.1 mm
5 0.02 mm
6 0.002 mm
7 0.001 mm

Direction
F forward
R reversed
V velocity

Data ty
S synchronous
A asynchronous

Data format
B binary
G gray

Data length
1 24 bit
2 25 bit
3 26 bit

Data mode

Assignment
1 Standard assignment

Number of contacts
6 6-pole

Connector type
1 straight

Connector type
H1 connector M12 x 1

Rod design

The LTX-R10 are magnetostrictive sensors, optimized for precise position control in hydraulic cylinders. They can also be used for level control when combined with optionally available floating magnets. Operating with absolute values, they need not be reset to zero.

Features

- Contactless and wear-free position detection
- Individually adjustable measuring range
- High resolution and accuracy
- Highly vibration and shock resistant
- Flexible application in all mobile and stationary systems
- Available in lengths up to 7500 mm
- 3-color LED display, indicates diagnostic values
- Protection class IP68
- SSI output: 24, 25 or 26 bit, binary or Gray code
- Analog output: 0…10 VDC, 4…20 mA

Properties

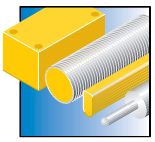

Designs
Rod design Ø 10.3 mm

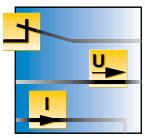

Electrical versions
Analog outputs: 4 … 20 mA or 0 … 10 V, SSI interface: 24, 25 or 26 bit, binary or Gray code

Measuring ranges
From 25 mm to 7500 mm, adjustable in 100 mm steps

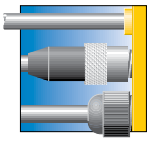

Electrical connections
Proven male M12 x 1 connection for easy installation

Materials
Closed housing, protection rating IP68

Special features
Programmable measuring range

Internet link
Scan the QR code to access our products on the internet

Hans Turck GmbH & Co. KG ▪ Tel. +49 208 49 52-0 ▪ Fax +49 208 49 52-264

LTX - Analog output or SSI interface

General data

Linearity deviation	0.01 % of full scale	**Protection class**	IP68
Connection	male, M12 x 1	**Operating voltage**	7…30 VDC
Housing material	Al	**Active face quality**	Stainless steel, 316
Ambient temperature	-40…+105 °C		

For more details on mounting aids and positioning elements see chapter „Accessories“

Types and data – selection table

Type	Measuring range	Output	Dimensions	Resolution	w	d
LTX100M-R10-LI0-X3-H1151	100 mm	Analog output, 4…20 mA	Ø 10.3 x 293 mm	16 bit	w192	d677
LTX250M-R10-LI0-X3-H1151	250 mm	Analog output, 4…20 mA	Ø 10.3 x 443 mm	16 bit	w192	d677
LTX500M-R10-LI0-X3-H1151	500 mm	Analog output, 4…20 mA	Ø 10.3 x 693 mm	16 bit	w192	d677
LTX1000M-R10-LI0-X3-H1151	1000 mm	Analog output, 4…20 mA	Ø 10.3 x 1193 mm	16 bit	w192	d677
LTX1500M-R10-LI0-X3-H1151	1500 mm	Analog output, 4…20 mA	Ø 10.3 x 1693 mm	16 bit	w192	d677
LTX2000M-R10-LI0-X3-H1151	2000 mm	Analog output, 4…20 mA	Ø 10.3 x 2193 mm	16 bit	w192	d677
LTX100M-R10-LU0-X3-H1151	100 mm	Analog output, 0…10 V	Ø 10.3 x 293 mm	16 bit	w193	d677
LTX250M-R10-LU0-X3-H1151	250 mm	Analog output, 0…10 V	Ø 10.3 x 443 mm	16 bit	w193	d677
LTX500M-R10-LU0-X3-H1151	500 mm	Analog output, 0…10 V	Ø 10.3 x 693 mm	16 bit	w193	d677
LTX1000M-R10-LU0-X3-H1151	1000 mm	Analog output, 0…10 V	Ø 10.3 x 1193 mm	16 bit	w193	d677
LTX1500M-R10-LU0-X3-H1151	1500 mm	Analog output, 0…10 V	Ø 10.3 x 1693 mm	16 bit	w193	d677
LTX2000M-R10-LU0-X3-H1151	2000 mm	Analog output, 0…10 V	Ø 10.3 x 2193 mm	16 bit	w193	d677
LTX200M-R10-SSI-2-GAF1-X3-H1161	200 mm	SSi, 25 Bit, Gray, asynchronous	Ø 10.3 x 393 mm	0,005 mm	w194	d677
LTX500M-R10-SSI-2-GAF1-X3-H1161	500 mm	SSi, 25 Bit, Gray, asynchronous	Ø 10.3 x 693 mm	0,005 mm	w194	d677
LTX1000M-R10-SSI-2-GAF1-X3-H1161	1000 mm	SSi, 25 Bit, Gray, asynchronous	Ø 10.3 x 1193 mm	0,005 mm	w194	d677
LTX1500M-R10-SSI-2-GAF1-X3-H1161	1500 mm	SSi, 25 Bit, Gray, asynchronous	Ø 10.3 x 1693 mm	0,005 mm	w194	d677
LTX2000M-R10-SSI-2-GAF1-X3-H1161	2000 mm	SSi, 25 Bit, Gray, asynchronous	Ø 10.3 x 2193 mm	0,005 mm	w194	d677

w Wiring diagrams on page 658 d Dimension drawing on page 670 Accessories on page 560

Inductive angle sensors

Inductive angle sensors – Contactless measurement of angles

The new inductive angle sensor from TURCK operates on the basis of a new, revolutionary measuring principle. It combines the positive features of standard measuring systems in one device and has undergone consistent further development. The angular position is not detected via a positioning magnet but via RLC coupling. The sensor is thus completely immune to magnetic fields such as generated by large motors for example.
Being extremely immune to electromagnetic interference and enclosed in a rugged IP67 rated plastic housing of unlimited durability, the Ri-angle sensors are suitable for many applications. The measuring range is 360° an the repeatability is 0.09°. On the output side, standard analog outputs are available or SSI interfaces.

The two-part build consisting of sensor and positioning element, compensates lateral offsets of up to 3 mm. As a result, the sensor works reliably and can be mounted on solid shafts as well as on hollow shafts. The contactless measuring principle reliably compensates bearing tolerances as well as vibration caused by irregularly rotating shafts.
The angle sensors are typically used in solar tracking systems, which guide the solar panels to the position of the sun. You also find them in printing machines, where they are deployed to measure the height of paper stacks or they continuously query the actual position of the dancer rolls to ensure constant web tension.

Our strengths – Your advantages

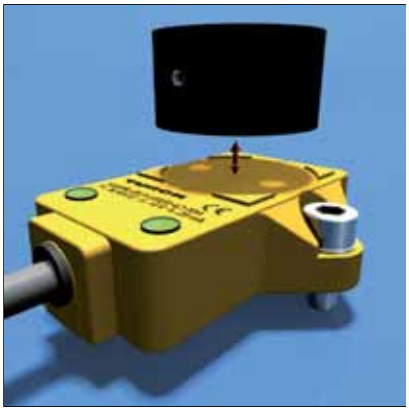

Contactless and wear-free detection

The new measuring principle operates entirely contactless and wear-free. Important features such as accuracy, linearity and tightness are conserved for life and guarantee faultless operation of the sensor at all times.

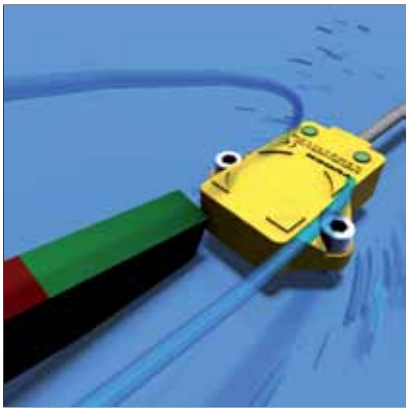

Highly interference immune

Frequency converters, large motors, ferrous metals or permanent magnets are no problem at all: The new angle sensor is insensitive to magnetic fields and features excellent EMC properties. Mechanical interferences are also securely hold off. The distance between sensor and positioning element has no influence on the output signal.

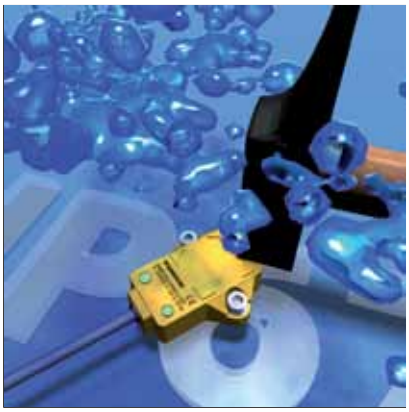

Rugged housing and easy mounting

The compact sensor is IP67 rated and resistant to many chemicals and oils. Made of high-quality plastic, the housing is very rugged. The two-part build consisting of sensor and positioning element compensates lateral offsets and guarantees easy fitting and operation.

Hans Turck GmbH & Co. KG ▪ Tel. +49 208 49 52-0 ▪ Fax +49 208 49 52-264

Your advantages

High linearity and vibration resistance

The new angle sensors provide highly precise measuring signals within 360° and a repeatability of 0.09°. The contactless measuring principle reliably compensates bearing tolerances as well as vibration caused by irregularly rotating shafts. This guarantees a high degree of linearity.

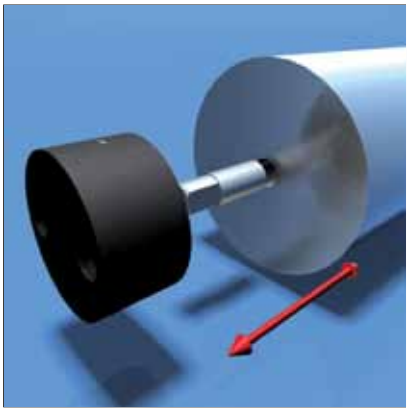

Positioning element adaptable to hollow and solid shafts

Additional mounting flexibility is achieved through optionally available 6 mm and 8 mm adapter pins. They allow you to easily modify standard hollow shaft sensors to solid shaft sensors.

Flexible process connection

Different types of outputs are also available: You can choose between 0…10 V, 4…20 mA and 0.5…4.5 V and also an SSI interface. A standard male M12 x 1 or cable connection are provided, making the use of special connectors redundant.

Type code

Ri	360	P1	–	QR14	–	ELiU5	X2	–	0,3-RS5	/	S97

Ri	360	P1	Inductive angle sensor	–	QR14	Housing	–	ELiU5	X2	Electrical version	–

Positioning element
P1 P1-Ri-QR14

Measuring range
360 360°

Functional principle
Ri rotatory inductive

Housing
QR14 rectangular, 53.5 x 49 x 14 mm

Number of LED
X2 2 x LED

Output type
ELiU5 analog output 4…20 mA / 0…10 V, teachable measuring range
ELU4 analog output 0.5…4.5 V, teachable measuring range

Hans Turck GmbH & Co. KG ▪ Tel. +49 208 49 52-0 ▪ Fax +49 208 49 52-264

0.3-RS5	Electrical connection	/	S97	Special version

Electrical connection

0.3-RS5	cable, 0.3 m, with connector, M12 x 1
blank	cable connection, 2 m

Special version

S97	extended temperature range -40…+70 °C, only available with electrical version ELU4

Ri-QR14 design

The measuring principle of inductive angle sensors is based on oscillation circuit coupling between the transducer and the sensor. The output signal provided is proportional to the angle of the positioning element. The sensors are wear and maintenance-free, thanks to the contactless operating principle. They convince through their excellent repeatability, resolution and linearity maintained within a broad temperature range. Thanks to the innovative technology, electromagnetic AC and DC fields have no influence on the measured signal.

Features

- Operates contactless, and wear-free
- Measuring range 360°
- High interference immunity and linearity
- Measures highly precise and functions highly reliable
- Rugged, high-quality plastic housing
- Hardly affected by lateral offset and vibration
- Adjustable angular range

Properties

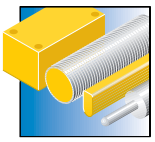

Designs
Rectangular design, protection class IP67, variously mountable

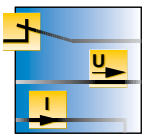

Electrical versions
Standard analog outputs, 4…20 mA and 0…10 V as well as SSI interface

Measuring ranges
Measuring range 360°, Repeatability 0.09°

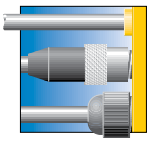

Electrical connections
Connection cable or cable with male end M12 x 1

Materials
High-quality plastic, resistant to many chemicals and oils

Special features
Positioning element adaptable to hollow and solid shafts; adjustable angular range

Internet link
Scan the QR code to access our products on the internet

Hans Turck GmbH & Co. KG ▪ Tel. +49 208 49 52-0 ▪ Fax +49 208 49 52-264

QR14 – With analog output

General data

Measuring range	0…360°	**Included in scope of supply**	Positioning element P1-Ri-QR14
Linearity deviation	0.3 % of full scale	**LED**	●
Protection class	IP67	**Description**	rectangular, plastic
Housing material	PBT	**Dimensions**	49 x 14 x 53.5 mm
Temperature drift	0.01 % / K	**Resolution**	12 bit

Positioning element included in delivery

Types and data – selection table

Type	Connection	Operating voltage	Output	Ambient temperature	w	d
RI360P1-QR14-ELIU5X2	2 m cable	15…30 VDC	Analog output, 4…20 mA, 0…10 V	-25…+70 °C	w195	d678
RI360P1-QR14-ELIU5X2-0,3-RS5	0.3 m Cable with connector, M12 x 1	15…30 VDC	Analog output, 4…20 mA, 0…10 V	-25…+70 °C	w196	d679
RI360P1-QR14-ELU4X2/S97	2 m cable	8…30 VDC	Analog output, 0.5…4.5 V	-40…+70 °C	w197	d678
RI360P1-QR14-ELU4X2-0,3-RS5/S97	0.3 m Cable with connector, M12 x 1	8…30 VDC	Analog output, 0.5…4.5 V	-40…+70 °C	w198	d679

QR14 - With SSI interface

General data

Measuring range	0…360°	**Included in scope of supply**	Positioning element P1-Ri-QR14
Linearity deviation	0.3 % of full scale	**LED**	●
Protection class	IP67	**Description**	rectangular, plastic
Operating voltage	15…30 VDC	**Output**	SSi, 25 Bit, Gray coded
Housing material	PBT	**Ambient temperature**	-25…+70 °C
Dimensions	49 x 14 x 53.5 mm	**Repeatability**	0.025 % of measuring range IA - BI
Temperature drift	0.0001 % / K	**Resolution**	16 bit

Positioning element included in delivery

Types and data – selection table

Type	Connection	w	d
RI360P1-QR14-ESG25X2	2 m cable	w199	d678
RI360P1-QR14-ESG25X2-0,3-RS8	0.3 m Cable with connector, M12 x 1	w200	d679

w Wiring diagrams on page 658 d Dimension drawing on page 670 Accessories on page 560

Encoders

Encoders and draw-wire sensors – Spot-on and trailblazing technology

Encoders measure rotation speed, sense, position, angle and length. For this purpose, they convert mechanical motion in electrical signals.
There are incremental and absolute encoders. Signal periods provided by incremental encoders are used as a measure for rotation speed or position. The dual-channel incremental encoder detects positions bidirectionally as well as the rotation sense of shafts.
With absolute encoders instead, each incremental angle is assigned a code pattern. The position is thus detected at any time, even in the event of power failure without having to perform a reference run. Single-turn encoders set back the coding to the initial value after each full revolution. Absolute encoders detect angles, positions and inclinations precisely. Tasks that are typically found in robotics, positioning and process technology.
Encoders are available as solid and hollow shaft types. Hollow shaft encoders can be mounted without couplings, brackets or other mounting aids. The hollow shaft encoder is shifted on the drive shaft, then clamped and if necessary fixated with a pin.
TURCK encoders are available in diverse mechanical designs, as versions for incremental or absolute position detection, as hollow or solid shafts and in various sizes with diameters from 24 mm to 120 mm. They fulfill different positioning tasks with a resolution of up to 14 bits (digital devices) and of up to 36,000 pulses per revolution (incremental types).
If simple length measurements have to be performed such as cutting paper or fabrics to length, encoders with a prefixed measuring wheel are the right choice. They are reasonably priced and operate highly accurate.
Encoders with prefixed draw-wire sensors (1 to 40 m long) are the best choice for direct length measurement. Thanks to the excellent repeatability rating of 0.05 mm, they solve position control tasks in a highly precise manner. Until now, such task could only be implemented with complex equipment. Whether applied to control the position of pumps in tanks, alignment of elevating platforms or orientation of cranes: Just select an encoder of the wanted size and output configuration and combine it with a draw-wire sensor of the right length.

Our strenghts – Your advantages

Many different designs

We offer the appropriate encoder for almost any application. Incremental and absolute encoders in different sizes are available as hollow or solid shaft types. From miniature versions, over IP69K rated types, up to encoders for the heavy industry. A broad range of connection possibilities provide tailor-made solutions for any application. Equally beneficial is the large range of available output types, making the connection to the control system very easy.

Highest accuracy

High-quality components and an innovative quality management are the prerequisites for the delivery of highly precise measured signals and form the basis for excellent linearity and repeatability. Even the most demanding applications are economically and technically feasible with TURCK encoders.

Rugged designs – Shock and vibration proof

Balanced stainless steel clamp rings and highly robust bearing- shaft connections improve the stability and reliability of the devices and resist extremely heavy mechanical impacts. Thanks to this new construction, the encoders are made for heavy duties and highest revolution speeds. The extremely rugged bearing assembly guarantees high stability when exposed to vibration for example. Mechanically complex applications are often exposed to intense load. Blocked bearings, large distances between the bearings and extra strong outer bearings prevent interferences and downtimes resulting from these loads.

Hans Turck GmbH & Co. KG ▪ Tel. +49 208 49 52-0 ▪ Fax +49 208 49 52-264

ur advantages

High protection rating

The mechanically protected shaft seal with its high protection rating of IP69K is very durable and protects against the most adverse conditions. TURCK encoders operate reliably even in roughest environments.

Highly interference immune

Frequency converters, large motors, ferrous metals or permanent magnets are no problem at all: Encoders working on the optical principle are immune to magnetic fields and offer excellent EMC properties.

Draw-wire sensors – For direct length measurement

Encoders with prefixed draw-wire sensors (0.25 to 40 m long) are the best solution for direct length measurement. Thanks to the excellent repeatability rating of 0.05 mm, they solve position control tasks in a highly precise manner. Until now, such task could only be implemented with complex equipment. Whether applied to control the position of pumps in tanks, alignment of elevating platforms or orientation of cranes: Just select an encoder of the wanted size and output configuration.

Type code

Type code encoders

RI	–	10	S	10	S	–	2B	1024	–	H1181

RI Encoder

Function

RI	incremental
RS	absolute (singleturn)
RM	absolute (multiturn)

– 10 Design

Additional information to housing

10	For more information on the device please see according data sheet on www.turck.com

S Shaft

Shaft

S	solid shaft
H	hollow shaft
B	blind hollow shaft

10 Shaft diameter [mm]

Diameter in mm

6	6 mm
8	8 mm
10	10 mm
12	12 mm
15	15 mm
25	25 mm
30	30 mm

S Flange

Meaning

C	clamping flange
E	engine coupling
S	synchro flange, flange without mounting element
S4	with spring element, long

– 2B Electrical output

Electrical output

2B	push-pull with inverting function, power supply: 10…30 VDC
2F	7272; push-pull with inverting function, power supply: 5…30 VDC low-level max. 0.5 V
3C	SSI, Gray power supply: 5…30 VDC low-level max. 0.5 V
5B	SSI, binary power supply: 10…30 VDC
7A	4…20 mA output power supply: 10…30 VDC
8B	0…10 V output power supply: 15…30 VDC
9A	PROFIBUS

1024 Resolution

Pulse frequency or in bit (B)

360	360
500	500
512	512
1000	1000
1024	1024
2048	2048
2500	2500
4096	4096
5000	5000
9B	9 Bit
12B	12 Bit
13B	13 Bit
16B	16 Bit
24B	24 Bit
28B	28 Bit

– H1181 Electrical connection

Electrical connection

C	cable (radial)
CT	cable (tangential)
RC	removable bus cover with cable gland
R3M12	bus cover (removable) with 3 x M12
12M23	male M23, 12-pole
H1151	male M12, 5-pole
H1141	male M12, 4-pole
H1181	male M12, 8-pole

Hans Turck GmbH & Co. KG ▪ Tel. +49 208 49 52-0 ▪ Fax +49 208 49 52-264

Type code draw-wire sensors

DW 6000 – 135 – 2B – H1141

DW Draw-wire

Draw-wire

6000 Measuring length [mm]

Length in mm

250	250 mm
500	500 mm
1000	1000 mm
2000	2000 mm
3000	3000 mm
6000	6000 mm
10000	10000 mm
15000	15000 mm
20000	20000 mm
30000	30000 mm
40000	40000 mm

– **135** Design –

Additional information to housing

135 For more information on the device please see according data sheet on www.turck.com

2B Electrical output – **H1 1 4 1** Electrical connection

Electrical output

7E	4…20 mA output power supply: 12…30 VDC
PA	potentiometer output power supply: max. 30 VDC; 1 kΩ

Assignment

1	standard assignment or customized

Number of contacts

4	number of contacts

Connector type

1	straight

Connector type

H1	connector M12 x 1

Designs and variants

	Design	Connection	Output	Page
Incremental – Compact Ø 37 mm – Hollow or solid shaft	shaft Hollow shaft	cable, 1 m	push-pull 7272, invertable	531
Incremental – Standard Ø 58 mm – Hollow or solid shaft	shaft Hollow shaft	male, M12 x 1	push-Pull, invertable	531
Incremental – Large hollow shaft Ø 100 mm	Hollow shaft	male, M23 12-pol	push-Pull, invertable	532
Absolut singleturn - Compact Ø 36 mm – Hollow or solid shaft	shaft Hollow shaft	cable, 1 m	Analog output, 0...10 V Analog output, 4...20 mA SSi, Binary coded	533
Absolut singleturn - Standard Ø 58 mm – Hollow or solid shaft	shaft Hollow shaft	male, M12 x 1 bus connection	SSi, Gray coded	533
Absolute multiturn – Compact Ø 36 mm – Hollow or solid shaft	shaft Hollow shaft	cable, 1 m	SSi, Gray coded	534

Hans Turck GmbH & Co. KG ▪ Tel. +49 208 49 52-0 ▪ Fax +49 208 49 52-264

ts and variants

	Design	Connection	Output	Page
Absolute multiturn – Standard Ø 58 mm – Hollow or solid shaft	shaft Hollow shaft	male, M12 x 1 bus connection	SSi, Gray coded	534
Draw-wire sensors – Current or potentiometer output	–	male, M12 x 1	Analog output, 4...20 mA Potentiometer	537

Encoders

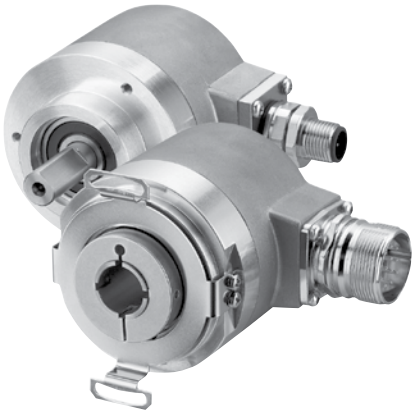

Encoders measure rotation speed, sense, position, angle and length. For this purpose, they convert mechanical motion in electrical signals. TURCK encoders are available in diverse designs, as versions for incremental or absolute position detection, as hollow or solid shafts and in various sizes with diameters from 24 mm to 102 mm. They fulfill different positioning tasks with a resolution of up to 17 bits (absolute encoders) and of up to 36,000 pulses per revolution (incremental encoders).

Features

- Rotary measurement, optical or magnetic measuring principle
- Incremental encoders, push-pull with inversion and zero output
- Absolute encoders, singleturn or multiturn
- Solid shaft or hollow shaft
- Protection class IP67, on the shaft side

Properties

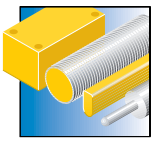

Designs
Hollow and solid shaft devices, incremental or absolute: Single/Multiturn

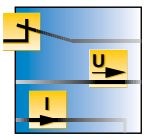

Electrical versions
Analog outputs 4…20 mA or 0…10 V, SSI interface or push-pull with inversion

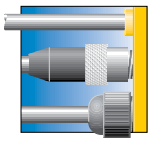

Electrical connections
Proven M12 x 1 or M23 connection, 12-pin

Materials
Rugged housings with high protection rating

Special features
High-temperature resistant for demanding applications

Internet link
Scan the QR code to access our products on the internet

Hans Turck GmbH & Co. KG ▪ Tel. +49 208 49 52-0 ▪ Fax +49 208 49 52-264

Incremental – Compact Ø 37 mm – Hollow or solid shaft

General data

Flange diameter	36.8 mm	**Connection**	cable, 1 m
Operating voltage	5…30 VDC	**Output**	push-pull 7272, invertable
Protection class housing	IP67	**Protection class shaft**	IP65
Ambient temperature	-20…+70 °C		

For more details on mounting aids see chapter „Accessories“

Types and data – selection table

Type	Flange type	Shaft diameter D	Shaft type	Resolution, incremental	w	d
Ri-08S6S-2F360-C 1M	without fixing clamp	6 mm	Shaft	360	w201	d680
Ri-08S6S-2F500-C 1M	without fixing clamp	6 mm	Shaft	500	w201	d680
RI-08S6S-2F512-C 1M	without fixing clamp	6 mm	Shaft	512	w201	d680
Ri-08S6S-2F1000-C 1M	without fixing clamp	6 mm	Shaft	1000	w201	d680
Ri-08S6S-2F1024-C 1M	without fixing clamp	6 mm	Shaft	1024	w201	d680
Ri-09H8E-2F360-C 1M	Flange with stator coupling	8 mm	Hollow shaft	360	w201	d681

Incremental – Standard Ø 58 mm – Hollow or solid shaft

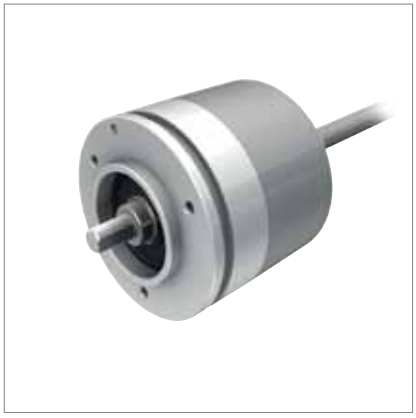

General data

Connection	male, M12 x 1	**Operating voltage**	10…30 VDC
Output	push-Pull, invertable	**Protection class housing**	IP67
Protection class shaft	IP67	**Ambient temperature**	-40…+85 °C

For more details on mounting aids see chapter „Accessories“

Types and data – selection table

Type	Flange diameter	Flange type	Shaft diameter D	Shaft type	Resolution, incremental	w	d
RI-10S6C-2B360-H1181	58 mm	Clamping flange	6 mm	Shaft	360	w202	d682
RI-10S6C-2B2048-H1181	58 mm	Clamping flange	6 mm	Shaft	2048	w202	d682
RI-10S6C-2B2500-H1181	58 mm	Clamping flange	6 mm	Shaft	2500	w202	d682
RI-10S6C-2B4096-H1181	58 mm	Clamping flange	6 mm	Shaft	4096	w202	d682
RI-10S6C-2B5000-H1181	58 mm	Clamping flange	6 mm	Shaft	5000	w202	d682
RI-10S10C-2B360-H1181	58 mm	Clamping flange	10 mm	Shaft	360	w202	d682
RI-10S10C-2B2048-H1181	58 mm	Clamping flange	10 mm	Shaft	2048	w202	d682
RI-10S10C-2B2500-H1181	58 mm	Clamping flange	10 mm	Shaft	2500	w202	d682
RI-10S10C-2B4096-H1181	58 mm	Clamping flange	10 mm	Shaft	4096	w202	d682
RI-10S10C-2B5000-H1181	58 mm	Clamping flange	10 mm	Shaft	5000	w202	d682
RI-10S6S-2B360-H1181	58 mm	Synchro flange	6 mm	Shaft	360	w202	d683

Table continues on the next page…

… Table starts on previous page

Type	Flange diameter	Flange type	Shaft diameter D	Shaft type	Resolution, incremental	w	d
RI-10S6S-2B2048-H1181	58 mm	Synchro flange	6 mm	Shaft	2048	w202	d683
RI-10S6S-2B2500-H1181	58 mm	Synchro flange	6 mm	Shaft	2500	w202	d683
RI-10S6S-2B4096-H1181	58 mm	Synchro flange	6 mm	Shaft	4096	w202	d683
RI-10S6S-2B5000-H1181	58 mm	Synchro flange	6 mm	Shaft	5000	w202	d683
RI-10S10S-2B360-H1181	58 mm	Synchro flange	10 mm	Shaft	360	w202	d683
RI-10S10S-2B2048-H1181	58 mm	Synchro flange	10 mm	Shaft	2048	w202	d683
RI-10S10S-2B2500-H1181	58 mm	Synchro flange	10 mm	Shaft	2500	w202	d683
RI-10S10S-2B4096-H1181	58 mm	Synchro flange	10 mm	Shaft	4096	w202	d683
RI-10S10S-2B5000-H1181	58 mm	Synchro flange	10 mm	Shaft	5000	w202	d683
Ri-12H10T-2B360-H1181	50.8 mm	Flange with torque stop	10 mm	Hollow shaft	360	w202	d684
Ri-12H10T-2B2048-H1181	50.8 mm	Flange with torque stop	10 mm	Hollow shaft	2048	w202	d684
RI-12H10T-2B2500-H1181	50.8 mm	Flange with torque stop	10 mm	Hollow shaft	2500	w202	d684
Ri-12H10T-2B4096-H1181	50.8 mm	Flange with torque stop	10 mm	Hollow shaft	4096	w202	d684
RI-12H10T-2B5000-H1181	50.8 mm	Flange with torque stop	10 mm	Hollow shaft	5000	w202	d684
RI-12H15T-2B360-H1181	50.8 mm	Flange with torque stop	15 mm	Hollow shaft	360	w202	d684
RI-12H15T-2B2048-H1181	50.8 mm	Flange with torque stop	15 mm	Hollow shaft	2048	w202	d684
RI-12H15T-2B2500-H1181	50.8 mm	Flange with torque stop	15 mm	Hollow shaft	2500	w202	d684
RI-12H15T-2B4096-H1181	50.8 mm	Flange with torque stop	15 mm	Hollow shaft	4096	w202	d684
RI-12H15T-2B5000-H1181	50.8 mm	Flange with torque stop	15 mm	Hollow shaft	5000	w202	d684

Incremental – Large hollow shaft Ø 100 mm

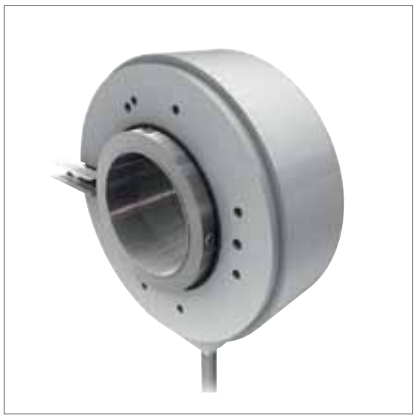

General data

Flange diameter	100 mm	**Flange type**	Flange with mounting element
Included in scope of supply	Spring element, long	**Shaft type**	Hollow shaft
Connection	male, M23, 12-pole	**Operating voltage**	10…30 VDC
Output	push-Pull, invertable	**Protection class housing**	IP65
Protection class shaft	IP65	**Ambient temperature**	-40…+90 °C

For more details on mounting aids see chapter „Accessories“

Types and data – selection table

Type	Shaft diameter D	Resolution, incremental	w	d
RI-42H25S4-2B1024-12M23	25 mm	1024	w203	d685
RI-42H25S4-2B2048-12M23	25 mm	2048	w203	d685
RI-42H25S4-2B5000-12M23	25 mm	5000	w203	d685
RI-42H30S4-2B1024-12M23	30 mm	1024	w203	d685
RI-42H30S4-2B2048-12M23	30 mm	2048	w203	d685
RI-42H30S4-2B5000-12M23	30 mm	5000	w203	d685

Absolut singleturn - Compact Ø 36 mm - Hollow or solid shaft

General data

Flange diameter	36 mm	**Measuring range**	0…360 °
Shaft diameter D	6 mm	**Connection**	cable, 1 m
Ambient temperature	-40…+85 °C		

For more details on mounting aids see chapter „Accessories“

Types and data – selection table

Type	Flange type	Shaft type	Operating voltage	Output	Resolution single-turn	Protection class housing	Protection class shaft	w	d
RS-06S6S-8B12B-C 1M	Synchro flange	Shaft	15…30 VDC	Analog output, 0…10V	12 Bit	IP69k	IP69k	w204	d686
RS-06S6S-7A12B-C 1M	Synchro flange	Shaft	10…30 VDC	Analog output, 4…20mA	12 Bit	IP69k	IP69k	w204	d686
RS-54S6S-5B9B-C 1M	Synchro flange	Shaft	5…30 VDC	SSi, Binary coded	9 Bit	IP67	IP67	w205	d687
RS-07H6E-8B12B-C 1M	Flange with stator coupling	Hollow shaft	15…30 VDC	Analog output, 0…10V	12 Bit	IP69k	IP69k	w204	d688
RS-07H6E-7A12B-C 1M	Flange with stator coupling	Hollow shaft	10…30 VDC	Analog output, 4…20mA	12 Bit	IP69k	IP69k	w204	d688
RS-55H6E-5B9B-C 1M	Flange with stator coupling	Hollow shaft	5…30 VDC	SSi, Binary coded	9 Bit	IP67	IP67	w205	d688

Absolut singleturn - Standard Ø 58 mm - Hollow or solid shaft

General data

Flange diameter	58 mm	**Measuring range**	0…360 °
Connection	male, M12 x 1	**Operating voltage**	10…30 VDC
Output	SSi, Gray coded	**Resolution single-turn**	13 Bit
Protection class housing	IP67	**Protection class shaft**	IP67
Ambient temperature	-40…+70 °C		

For more details on mounting aids see chapter „Accessories“

Types and data – selection table

Type	Flange type	Shaft diameter D	Shaft type	w	d
RS-24S6C-3C13B-H1181	Clamping flange	6 mm	Shaft	w206	d689
RS-24S10C-3C13B-H1181	Clamping flange	10 mm	Shaft	w206	d689
RS-24S6S-3C13B-H1181	Synchro flange	6 mm	Shaft	w206	d690
RS-24S10S-3C13B-H1181	Synchro flange	10 mm	Shaft	w206	d690
RS-31H12E-3C13B-H1181	Flange with stator coupling	12 mm	Hollow shaft	w206	d691

Devices with fieldbus interface available, see type code

w Wiring diagrams on page 658 d Dimension drawing on page 670 Accessories on page 560

Absolute multiturn – Compact Ø 36 mm – Hollow or solid shaft

General data

Flange diameter	36 mm	**Connection**	cable, 1 m
Operating voltage	10…30 VDC	**Output**	SSi, Gray coded
Resolution single-turn	12 Bit	**Resolution multiturn**	12 Bit
Protection class shaft	IP67	**Ambient temperature**	-40…+85 °C

For more details on mounting aids see chapter „Accessories“

Types and data – selection table

Type	Flange type	Shaft diameter D	Shaft type	Protection class housing	w	d
RM-46S8S-3C24B-CT 1M	Synchro flange	8 mm	Shaft	IP67	w207	d692
RM-50H10E-3C24B-CT 1M	Flange with stator coupling	10 mm	Hollow shaft	IP65	w207	d693

Absolute multiturn – Standard Ø 58 mm – Hollow or solid shaft

General data

Flange diameter	58 mm	**Connection**	male, M12 x 1
Operating voltage	10…30 VDC	**Output**	SSi, Gray coded
Resolution single-turn	13 Bit	**Resolution multiturn**	12 Bit
Protection class housing	IP67	**Protection class shaft**	IP67
Ambient temperature	-40…+70 °C		

For more details on mounting aids see chapter „Accessories“

Types and data – selection table

Type	Flange type	Shaft diameter D	Shaft type	w	d
RM-28S6C-3C25B-H1181	Clamping flange	6 mm	Shaft	w206	d694
RM-28S10C-3C25B-H1181	Clamping flange	10 mm	Shaft	w206	d694
RM-28S6S-3C25B-H1181	Synchro flange	6 mm	Shaft	w206	d695
RM-28S10S-3C25B-H1181	Synchro flange	10 mm	Shaft	w206	d695
RM-35H12E-3C25B-H1181	Flange with stator coupling	12 mm	Hollow shaft	w206	d696

Devices with fieldbus interface available, see type code

Wiring diagrams on page 658 Dimension drawing on page 670 Accessories on page 560

Draw-wire sensors

Encoders with prefixed draw-wire sensors (0.25 to 40 m long) are the best solution for direct length measurement. Thanks to the excellent repeatability rating of 0.05 mm, they solve position control tasks in a highly precise manner. So far, such task were only implementable with complex equipment. Whether applied to control the position of pumps in tanks, alignment of elevating platforms or orientation of cranes: Just select an encoder of the wanted size and output configuration.

Features

- Direct length measurement, measuring range 0.25…40 m
- Repeatability up to 0.05 mm
- Potentiometer output or analog current output
- M12 connectors

Properties

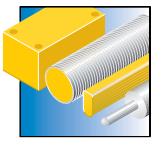

Designs
Encoders with prefixed draw-wire sensors

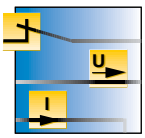

Electrical versions
Analog current output 4…20 mA or potentiometer output

Measuring ranges
250 mm to 40000 mm

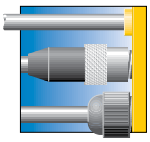

Electrical connections
Proven male M12 x 1 connection for easy installation

Materials
Rugged housings with high protection rating

Special features
Highly accurate position control

Internet link
Scan the QR code to access our products on the internet

Hans Turck GmbH & Co. KG ▪ Tel. +49 208 49 52-0 ▪ Fax +49 208 49 52-264

Draw-wire sensors – Current or potentiometer output

General data

Linearity deviation	0.1 % of full scale	**Protection class**	IP65
Connection	male, M12 x 1		

Types and data – selection table

Type	Measuring range	Operating voltage	Output	Ambient temperature	w	d
DW250-70-7E-H1141	0…250 mm	12…30 VDC	Analog output, 4…20mA	-20…+60 °C	w208	d697
DW500-70-7E-H1141	0…500 mm	12…30 VDC	Analog output, 4…20mA	-20…+60 °C	w208	d697
DW1000-110-7E-H1141	0…1000 mm	12…30 VDC	Analog output, 4…20mA	-20…+60 °C	w208	d698
DW2000-110-7E-H1141	0…2000 mm	12…30 VDC	Analog output, 4…20mA	-20…+60 °C	w208	d698
DW3000-110-7E-H1141	0…3000 mm	12…30 VDC	Analog output, 4…20mA	-20…+60 °C	w208	d698
DW6000-155-7E-H1141	0…6000 mm	12…30 VDC	Analog output, 4…20mA	-20…+60 °C	w208	d699
DW10000-135-7E-H1141	0…10000 mm	12…30 VDC	Analog output, 4…20mA	-20…+60 °C	w208	d700
DW15000-135-7E-H1141	0…15000 mm	12…30 VDC	Analog output, 4…20mA	-20…+60 °C	w208	d701
DW20000-135-7E-H1141	0…20000 mm	12…30 VDC	Analog output, 4…20mA	-20…+60 °C	w208	d701
DW30000-135-7E-H1141	0…30000 mm	12…30 VDC	Analog output, 4…20mA	-20…+60 °C	w208	d702
DW40000-135-7E-H1141	0…40000 mm	12…30 VDC	Analog output, 4…20mA	-20…+60 °C	w208	d703
DW250-70-PA-H1141	0…250 mm	0…30 VDC	Potentiometer	-20…+85 °C	w209	d697
DW500-70-PA-H1141	0…500 mm	0…30 VDC	Potentiometer	-20…+85 °C	w209	d697
DW1000-110-PA-H1141	0…1000 mm	0…30 VDC	Potentiometer	-20…+85 °C	w209	d698
DW2000-110-PA-H1141	0…2000 mm	0…30 VDC	Potentiometer	-20…+85 °C	w209	d698
DW3000-110-PA-H1141	0…3000 mm	0…30 VDC	Potentiometer	-20…+85 °C	w209	d698
DW6000-155-PA-H1141	0…6000 mm	0…30 VDC	Potentiometer	-20…+85 °C	w209	d699
DW10000-135-PA-H1141	0…10000 mm	0…30 VDC	Potentiometer	-20…+85 °C	w209	d700
DW15000-135-PA-H1141	0…15000 mm	0…30 VDC	Potentiometer	-20…+85 °C	w209	d701
DW20000-135-PA-H1141	0…20000 mm	0…30 VDC	Potentiometer	-20…+85 °C	w209	d701
DW30000-135-PA-H1141	0…30000 mm	0…30 VDC	Potentiometer	-20…+85 °C	w209	d702
DW40000-135-PA-H1141	0…40000 mm	0…30 VDC	Potentiometer	-20…+85 °C	w209	d703

w Wiring diagrams on page 658 d Dimension drawing on page 670 Accessories on page 560

Indicators and lights

Indicators and lights – Lighting solutions for the industry

The LED work lights from TURCK are low-power consuming devices and especially designed for industrial use. They are IP67/IP69K rated and suitable for many demanding applications where bright and uniform illumination is required.
The color temperature lies in the field of daylight, between 5,000 and 10,000 Kelvin. Depending on the model, the luminous flux may vary between 65 and 1,800 lumen. Comparison: A 100 W incandescent lamp has a luminous flux of 1400 lumen, a 60 W incandescent lamp approx. 700 lumen. LED lights have a service life of 100,000 hours, which is 100 times longer than that of a conventional incandescent lamp.
The work lights are connected via a standard male M12 x 1 or stranded cable end directly at the terminal connection. There are two ways to switch them on or off. Either via power supply (10…30 VDC) or – when constantly powered – via a switch integrated in some WL versions and located directly next to the LED light.
LED machine lights can be integrated directly in the machine wiring and control environment. They are encapsulated and resistant to conventional cooling lubricants, oils or aggressive cleaning agents. Supplied with 24 VDC and consuming less than 0.5 A, the lights are directly controllable via a standard PLC output, passive junctions or fieldbus stations.
The TL50 tower lights indicate the operating status clearly visible throughout the entire production line. Each tower light is preassembled and preconfigured, featuring LEDs in different colors and with optional audible function. The tower lights are easily installed, no matter if mounted directly on the machine, in the cabinet or at critical control points within the production line.

Our strengths – Your advantages

TL50BL – Multisegment indicators

The new TL50BL tower lights are clearly visible and indicate the operating status throughout the entire production line. Each tower light is preassembled and preconfigured, featuring LEDs in different colors and with optional audible function. The tower lights are easily installed, no matter if mounted directly on the machine, in the cabinet or at critical control points within the production line. Up to five different colors can be combined in a single tower and can be on simultaneously. The durable LED technology has a service life of more than 100,000 hrs. (11 years). The volume of the audible alert is adjustable; max. sound pressure level 95 dB at 1 m distance.

WL series – LED work lights for industrial applications

The LED work lights from TURCK are low-power consuming devices and especially designed for industrial use. The rugged IP67/IP69K rated devices can be used in many demanding applications where bright and uniform illumination is required. The color temperature lies in the field of daylight, between 5,000 and 10,000 Kelvin.

Depending on the model, the luminous flux may vary between 65 and 1,800 lumen. A 100 W incandescent lamp has a luminous flux of 1400 lumen, a 60 W incandescent lamp approx. 700 lumen. LED lights have a service life of 100,000 hours, which is 100 times longer than that of a conventional incandescent lamp.

ML – LED machine lights

The high-power LED machine lights are made for rough environmental conditions and fulfill many industrial requirements. The die-cast aluminium housing is IP67 rated and the rugged glass window withstands even cooling lubricants, oils and aggressive cleaning agents.
They are powered with 24 VDC via PINs 3 (-) and 4 (+) and can be connected directly to the switching output of fieldbus stations or passive junctions. This allows them to be switched on or off separately which reduces the energy consumption considerably. LED machine lights can be integrated seamlessly in the wiring and don't need additional hardware components.

Hans Turck GmbH & Co. KG ▪ Tel. +49 208 49 52-0 ▪ Fax +49 208 49 52-264

ur advantages

Designs and variants

	Design	Protection class	Ambient temperature	Funkction	Light type	Page
K30 – Beacon	cylindrical/threaded Ø 30 x 58 mm	IP67 / IP69K	-40…+50 °C	Beacon	green red green / red green / red / yellow	545
K50 – Beacon	cylindrical/threaded Ø 50 x 37.3 mm	IP67 / IP69K	-40…+50 °C	Beacon	green red green / red green / red / yellow	545
K50 – Beacon	cylindrical/threaded Ø 50 x 49 mm	IP67 / IP69K	-40…+50 °C	Beacon	green red green / red	546
TL50 – Tower light	cylindrical/threaded Ø 50 x 142.6 mm Ø 50 x 183.3 mm Ø 50 x 224 mm	IP67	-40…+50 °C	Tower light	green / red / yellow green / red / yellow / blue green / red / yellow / blue / white	549
TL50 Beacon – Tower light	cylindrical/threaded Ø 50 x 46.2 mm Ø 50 x 72 mm Ø 50 x 97.8 mm Ø 50 x 123.6 mm	IP67	-40…+50 °C	Tower light	red green / red green / red / yellow green / red / yellow / blue	549
WLA – Area light	rectangular 80.1 x 25.8 x 105.1 mm 80.1 x 25.8 x 180.1 mm 80.1 x 25.8 x 272.7 mm 80.1 x 25.8 x 356.6 mm	IP67 / IP69K	-20…+50 °C	Area light	white, 5000…8300 K	551
WLS28 - Linear light	rectangular	IP50	-20…+50 °C	Linear light	white, 5000…8300 K	553

Hans Turck GmbH & Co. KG ▪ Tel. +49 208 49 52-0 ▪ Fax +49 208 49 52-264

	Design	Protection class	Ambient temperature	Funkction	Light type	Page
WL50 – Spotlight	cylindrical/threaded rectangular	IP67 / IP69K IP67	-40…+50 °C	Spotlight	white, 5000…8300 K	555
WL50S – Spotlight	cylindrical/threaded	IP69K	-40…+70 °C	Spotlight	green, 520…535 nm red, 620…630 nm white, 5000…8300 K	555
CA40 – Stacklight – Cube	rectangular	IP67	-40…+50 °C	Stacklight – Cube	white, 6300 K	557
Q20L80 – Built-in longitudinal light	rectangular	IP67	-40…+50 °C	Built-in longitudinal light	white, 4000…7000 K	557
RF160 – Built-on beacon	cylindrical/smooth	IP67	-40…+50 °C	Built-on beacon	white, 5000…7000 K	558

Multisegment LED indicators EZ-LIGHT

The K30/K50 series provide a comprehensive selection of job lights, indicator lights, multisegment indicators and touch switches for job sequencing and monitoring of pick-to-light and assembly processes. The rugged devices are suited for rough industrial applications and feature clearly visible status indicators.
The EZ-LIGHT indicators are programmed in a few steps and are easily mounted directly on the machine, in the cabinet or at critical control points. A great variety of designs, modules, functions and accessories offer perfect solutions for any task.

Features

- Highly visible LED indicators, up to 5 colors available
- Optional audible alert
- Different designs and sizes
- Simple mounting and configuration

Type code K50BCL Beacon

K50BCL	GRX	P	Q

K50BCL Series

Series

K50BCL	multifunction display cylindrical, plastic: Ø 50 mm, thread: Ø 30 mm

GRX LED color/signals

LED color

B	blue
G	green
Y	yellow
R	red
X	no other functions
2	3 colors / 7 function

Audible signals

blank	without audible signals
A	with audible signals

P Input

Input

P	PNP
N	NPN

Q Electrical connection

Electrical connection

blank	pigtail with cable connection, 2 m
Q	connector, M12 x 1

Hans Turck GmbH & Co. KG ▪ Tel. +49 208 49 52-0 ▪ Fax +49 208 49 52-264

K30 – Beacon

General data

Protection class	IP67 / IP69K	**Connection**	male, M12 x 1
Operating voltage	10…30 VDC	**Response time**	1 ms
Housing material	PC	**Ambient temperature**	-40…+50 °C
Function	beacon	**Window material**	Plastic

Types and data – selection table

Type	Light type	w	d
K30LGXXPQ	green	w210	d704
K30LXRXPQ	red	w210	d704
K30LGRXPQ	green / red	w210	d704
K30LGRYPQ	green / red / yellow	w210	d704

Many different types available, also with cable and / or different colors, see type code

K50 – Beacon

General data

Protection class	IP67 / IP69K	**Connection**	male, M12 x 1
Operating voltage	18…30 VDC	**Response time**	1 ms
Housing material	PC	**Ambient temperature**	-40…+50 °C
Function	beacon	**Window material**	Plastic

Types and data – selection table

Type	Light type	w	d
K50LGXXPQ	green	w210	d705
K50LXRXPQ	red	w210	d705
K50LGRXPQ	green / red	w210	d705
K50LGRYPQ	green / red / yellow	w210	d705

Many different types available, also with cable and / or different colors, see type code

w Wiring diagrams on page 658 d Dimension drawing on page 670 Accessories on page 560

K50 – Beacon

General data

Protection class	IP67 / IP69K	**Connection**	male, M12 x 1
Operating voltage	12…30 VDC	**Response time**	10 ms
Housing material	PC	**Ambient temperature**	-40…+50 °C
Function	beacon	**Window material**	Plastic

Types and data – selection table

Type	Light type	w	d
K50BCLXGXPQ	green	w210	d706
K50BCLXRXPQ	red	w210	d706
K50BCLGRXPQ	green / red	w210	d706

Many different types available, also with cable and / or different colors, see type code

Wiring diagrams on page 658 Dimension drawing on page 670 Accessories on page 560

LED tower lights EZ-LIGHT

The TL50 tower lights are clearly visible and easy to handle. Each tower light is preassembled and preconfigured, featuring LEDs in different colors and with optional audible alert. The tower lights are easily installed, no matter if mounted directly on the machine, in the cabinet or at critical control points within the production line. Up to five different color lights are combinable in a single TL50 tower and can be on simultaneously. Devices with acoustic alarm have also a volume controller.

Features

- Multicolor multisegment indicators
- Green, yellow, red, blue or white LEDs
- Optional audible alert with volume control (max. 95 dB)
- Longlife LED technology, low-power consumption
- Protection class IP67 (with audible function IP50)
- Water and oil-tight
- Insensitive to ambient lights, shock, vibration and electromagnetic interference
- Wide range of accessories for variable and easy mounting

Type code TL50BL Beacon

TL50BL	BGYR	A	QP

TL50BL	Series	BGYR	LED color	A	Signals

Series

TL50BL multifunction display, Ø 50 mm, different heights depending on number of LED:

without audible alert (IP67):

1 element	46.2 mm
2 elements	72.0 mm
3 elements	97.8 mm
4 elements	123.6 mm

with audible alert (IP67)

1 element	102.2 mm
2 elements	126.0 mm
3 elements	151.8 mm
4 elements	177.6 mm

with audible alert (IP50)

1 element	71.1 mm
2 elements	102.9 mm
3 elements	128.7 mm
4 elements	154.5 mm

LED color

B	blue
G	green
Y	yellow
R	red
W	white

Signals

blank	without audible signals
A	audible signals (IP50)
ALS	audible signals (IP67)

QP	Electrical connection

Electrical connection

blank	cable connection, 2 m
Q	connector, M12 x 1
QP	pigtail with connector, M12 x 1

Hans Turck GmbH & Co. KG ▪ Tel. +49 208 49 52-0 ▪ Fax +49 208 49 52-264

TL50 – Tower light

General data

Protection class	IP67	**Connection**	male, M12 x 1
Operating voltage	21…27 VAC / 18…30 VDC	**Response time**	10 ms
Housing material	ABS	**AC rated operational current**	100 AC
Ambient temperature	-40…+50 °C	**Function**	tower light
Window material	Plastic		

Types and data – selection table

Type	Light type	w	d
TL50HGYRQ	green / red / yellow	w210	d707
TL50HBGYRQ	green / red / yellow / blue	w211	d708
TL50HWBGYRQ	green / red / yellow / blue / white	w212	d709

Many different types available, also with cable and / or different colors, see type code

TL50 Beacon – Tower light

General data

Protection class	IP67	**Connection**	male, M12 x 1
Operating voltage	21…27 VAC / 12…30 VDC	**Response time**	1 ms
Housing material	ABS	**AC rated operational current**	100 AC
Ambient temperature	-40…+50 °C	**Function**	tower light
Window material	Acrylic		

Types and data – selection table

Type	Light type	w	d
TL50BLRQ	red	w210	d710
TL50BLGRQ	green / red	w210	d711
TL50BLGYRQ	green / red / yellow	w210	d712
TL50BLBGYRQ	green / red / yellow / blue	w211	d713

w Wiring diagrams on page 658 d Dimension drawing on page 670 Accessories on page 560

WLA – Area lights

The WLA area lights are available in different LED color combinations and light field sizes and consume very little power. The IP67 / IP69K rating qualifies them for industrial applications. They are powered either via a male M12 x 1 connection or a 2 m cable. The area lights are not switched on via a button but rather through applying the necessary voltage of 10…30 VDC.

Features

- Energy-efficient
- Service life 100,000 hours
- Rugged design
- Uniform illumination
- Standard electrical connection

Type code Work Lights WLA

WLA	W	105x180	D	L11	Q

WLA Series
- Work lights

W LED colors
- LED colors
  - **W** cold white
  - **WW** warm white
  - **R** red
  - **G** green
  - **B** blue
  - **Y** yellow

105x180 Field
- Illuminated field
  - **105x180** 105 x 180 mm
  - **190x180** 190 x 180 mm
  - **275x180** 275 x 180 mm
  - **360x180** 360 x 180 mm

D Window
- Window
  - **blank** clear
  - **D** diffuse

L11 Lens
- Lens
  - **blank** no lens
  - **L11** lens, beam angle 11°

Q Electrical connection
- Electrical connection
  - **blank** cable connection, 2 m
  - **Q** connector M12 x 1

Hans Turck GmbH & Co. KG ▪ Tel. +49 208 49 52-0 ▪ Fax +49 208 49 52-264

WLA – Area light

General data

Protection class	IP67 / IP69K	**Connection**	male, M12 x 1
Operating voltage	12…30 VDC	**Housing material**	PBT
Light type	white, 5000…8300 K	**Ambient temperature**	-20…+50 °C
Function	area light	**Window material**	Acrylic

Types and data – selection table

Type	Luminous flux lumen	Leistung	w	d
WLAW105X180Q	550 lm	12 W	w213	d714
WLAW190X180Q	1100 lm	24 W	w213	d715
WLAW275X180Q	1650 lm	36 W	w213	d716
WLAW360X180Q	2200 lm	48 W	w213	d717

Many different types available, also with cable and / or different colors, see type code

w Wiring diagrams on page 658 d Dimension drawing on page 670 Accessories on page 560

WLS28 - Linear lights

The WLS28 linear lights are available in many different types. The series comprises types with different LED colors and light field sizes, IP50 or IP67/IP69K rating, cascadable via a female M12 connection or non-cascadable, equipped with a male M12 x 1 or a 2 m cable for power supply. The IP50 rated devices are available with or without ON/OFF switch. The operating voltage is 12…30 VDC.

Features

- Energy-efficient
- Service life 100,000 hours
- Rugged design
- Uniform illumination
- Standard electrical connection

Type code Work Lights WLS28

WLS28	C	W	145	D	X	.	Q

WLS28 Series

Work lights

C Cascadable

Cascadable

C	cascadable
X	not cascadable

W LED color

LED color

W	cold white
WW	warm white
R	red
G	green
B	blue
Y	yellow

145 Field

Illuminated field

145	145 mm
285	285 mm
430	430 mm
570	570 mm
710	710 mm
850	850 mm
990	990 mm
1130	1130 mm

D Window

Window

blank	clear
D	diffuse

X Design

Design

X	not sealed
S	sealed

ON/OFF switch

ON/OFF switch

blank	no
PB	ON/ OFF switch integrated

Q Electrical connection

Electrical connection

blank	cable connection, 2 m
Q	connector M12 x 1

Hans Turck GmbH & Co. KG ▪ Tel. +49 208 49 52-0 ▪ Fax +49 208 49 52-264

WLS28 - Linear light

General data

Protection class	IP50	**Connection**	male, M12, M12 x 1
Operating voltage	12…30 VDC	**Housing material**	Al
Light type	white, 5000…8300 K	**Ambient temperature**	-20…+50 °C
Function	linear light	**Window material**	Acrylic

Types and data – selection table

Type	Luminous flux lumen	Leistung	w	d
WLS28CW145XQ	225 lm	6 W	w213	d718
WLS28CW285XQ	450 lm	9 W	w213	d718
WLS28CW430XQ	675 lm	15 W	w213	d718
WLS28CW570XQ	900 lm	18 W	w213	d718
WLS28CW710XQ	1125 lm	24 W	w213	d718
WLS28CW850XQ	1350 lm	27 W	w213	d718
WLS28CW990XQ	1575 lm	33 W	w213	d718
WLS28CW1130XQ	1800 lm	36 W	w213	d718

Many different types available, also with cable and / or different colors, see type code

Wiring diagrams on page 658 Dimension drawing on page 670 Accessories on page 560

WL50 – Spotlight

The WL50 spotlights feature six LEDs with a total power below 2 W. They are available as flat types (WL50FQ) or as types with Ø 30 mm thread (WL50Q) and both with or without pushbutton (PB). The WL50S spotlights feature three high-intensity LEDs and are available with different beam angles and colors.
Both series can be powered with 10…30 VDC and are delivered with a male M12 x 1 connector (Q-type) or a 2 m connection cable.

Features

- Energy-efficient
- Service life 100,000 hours
- Rugged design
- Uniform illumination
- Standard electrical connection

Type code Work Lights WL50S

WL50S W L11 Q

WL50S Housing

Work lights - Spots

W LED colors

LED colors

W	cold white
WW	warm white
R	red
G	green
B	blue
Y	yellow

L11 Lens

Lense

L5	lens, beam angle 5°
L11	lens, beam angle 11°
L20	lens, beam angle 20°

Q Electrical connection

Electrical connection

blank	cable connection, 2 m
Q	connector M12 x 1

Hans Turck GmbH & Co. KG ▪ Tel. +49 208 49 52-0 ▪ Fax +49 208 49 52-264

WL50 – Spotlight

General data

Connection	male, M12 x 1	**Operating voltage**	12…30 VDC
Housing material	PC	**Light type**	white, 5000…8300 K
Ambient temperature	-40…+50 °C	**Luminous flux lumen**	65 lm
Leistung	1.7 W	**Function**	Spotleuchte
Window material	Plastic		

Types and data – selection table

Type	Protection class	w	d
WL50Q	IP67 / IP69K	w213	d719
WL50FQ	IP67 / IP69K	w213	d720
WL50PBQ	IP67	w214	d721
WL50FPBQ	IP67	w214	d722

Many different types available, also with cable, see type code

WL50S – Spotlight

General data

Protection class	IP69K	**Connection**	male, M12 x 1
Operating voltage	12…30 VDC	**Housing material**	Al
Ambient temperature	-40…+70 °C	**Leistung**	1.7 W
Function	Spotlight	**Window material**	Plastic
Aperture angle degree	11°		

Types and data – selection table

Type	Light type	Luminous flux	w	d
WL50SGL11Q	green, 520…535 nm	200 lm	w214	d723
WL50SRL11Q	red, 620…630 nm	105 lm	w214	d723
WL50SWL11Q	white, 5000…8300 K	285 lm	w214	d723

Many different types available, also with cable and / or different beam width, see type code

Indicators and lights

w Wiring diagrams on page 658 d Dimension drawing on page 670 Accessories on page 560

Machine lights CA40, Q20L80 and RF160

LED machine lights are directly integrable in the machine wiring and control environment, allowing you to cut down on hardware costs because additional cabinet components are not required. All devices are IP67 rated and delivered in industrial conform designs for extension of and installation in systems. Supplied with 24 VDC and consuming less than 0.5 A, the TURCK machine lights are directly controllable via a standard PLC output, passive junctions or fieldbus stations. The control of illumination via PLC reduces the energy costs because the duty cycle is solely controlled by the process.

Features

- IP67 rated housings, encapsulated and resistant to conventional cooling lubricants, oils or aggressive cleaning agents
- Connected via rugged male M12 x 1 or 2 m connection cable
- Direct control via standard PLC output, passive junction boxes or fieldbus stations

Type code Machine Lights

ML	-CA40	G	-9	X3	-CW	W	-H1141	/G

ML Machine Lights

Machine Lights

-CA40 Series

Series

CA40	cubic lights, build-on 40 x 40, metal housing
Q20L80	rectangular light, build-in 20 x 80, plastic housing
RF160	build-on round light, 160 mm, metal housing

G Window

Window

G	safety glass
P	plastic

-9 Operating voltage

Operating voltage

9	24 VDC

X3 Number of LED

Number of LED

X2	2 LEDs
X3	3 LEDs
X8	8 LEDs

-CW LED Color

LED Color

CW	cold white

W Opening angle

Opening angle

S	0° - 30°
N	31° - 70°
W	71° - 120°

-H1141 Electrical connection

Electrical connection

blank	2 m cable connection, 2 wire
H1141	M12 x 1-connector, 4-pole
0.5-RS4	0.5 m cable connection with M12 x 1-connector, 4-pole

/G Special version

Special version

/G	gooseneck

Hans Turck GmbH & Co. KG ▪ Tel. +49 208 49 52-0 ▪ Fax +49 208 49 52-264

CA40 – Stacklight – Cube

General data

Protection class	IP67	**Connection**	male, M12 x 1
Operating voltage	18…30 VDC	**Housing material**	Al
Light type	white, 6300 K	**Ambient temperature**	-40…+50 °C
Leistung	4 W	**Function**	Mountable cube light
Aperture angle degree	120°		

Types and data – selection table

Type	Window material	w	d
ML-CA40G-9X3-CWW-H1141	twin-pane safety glass	w215	d724
ML-CA40P-9X3-CWW-H1141	Plastic	w215	d724
ML-CA40G-9X3-CWW-H1141/G	twin-pane safety glass	w215	d725

Q20L80 – Built-in longitudinal light

General data

Protection class	IP67	**Connection**	0.5 m Cable with connector, M12 x 1
Operating voltage	18…30 VDC	**Housing material**	PA
Light type	white, 4000…7000 K	**Ambient temperature**	-40…+50 °C
Leistung	6 W	**Function**	Built-in longitudinal light
Aperture angle degree	90°		

Types and data – selection table

Type	Window material	w	d
ML-Q20L80G-9X2-CWW-0,5-RS4	twin-pane safety glass	w215	d726
ML-Q20L80P-9X2-CWW-0,5-RS4	Plastic	w215	d726

w Wiring diagrams on page 658 d Dimension drawing on page 670 Accessories on page 560

RF160 – Built-on beacon

General data

Protection class	IP67	**Operating voltage**	18…30 VDC
Housing material	Al	**Light type**	white, 5000…7000 K
Ambient temperature	-40…+50 °C	**Leistung**	24 W
Function	Mountable beacon	**Window material**	twin-pane safety glass

Types and data – selection table

Type	Connection	Aperture angle	w	d
ML-RF160-9X8-CWN-H1141	male, M12 x 1	38°	w215	d727
ML-RF160-9X8-CWS-H1141	male, M12 x 1	8°	w215	d727
ML-RF160-9X8-CWN/G	2 m cable	38°	w215	d728
ML-RF160-9X8-CWS/G	2 m cable	8°	w215	d728

Hans Turck GmbH & Co. KG ▪ Tel. +49 208 49 52-0 ▪ Fax +49 208 49 52-264

Wiring diagrams on page 658 Dimension drawing on page 670 Accessories on page 560

Connection and mounting accessories

Connection technology

TURCK connectors fulfill many different requirements of the automation industry. The standard and universally applicable product series help to minimize installation efforts and storage space. M8/ M12 x 1 female or male outputs are available, straight and angled, 3 and 4-pole. The M12 is also available as 5-pole version. The entire product family is IP67 rated.

Mounting accessories

TURCK off ers the appropriate accessories for quick mounting, optimal operation and protection of the sensors.
Accessories for:

- Proximity sensors
- Dual sensors for rotary actuators
- Magnetic fi eld sensors
- Pressure sensors
- Temperature sensors
- Flow sensors
- Ultrasonic sensors

More accessories for photoelectric and inspection sensors are listed at the end.

The product portfolio features female connectors with injection-moulded cables, connection cables and field wireable female connectors. You find a short overview of the standard female connectors with stripped cable end further down in this chapter.
Please visit our website for more details on our entire product range.

Features

- **Connectors – eXtended Line:**
- PUR, qualified for drag chain use
- Free from halogen, silicone and PVC
- Resistant to weld splatter, chemicals and oils
- Flame-retardant, UV-resistant
- **FB+ males:**
- IP68/IP69K rated
- Resistant to cleaning agents
- Stainless steel coupling nut

Connectors

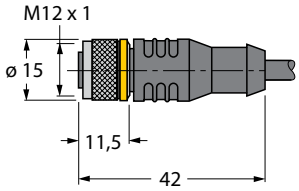

female connector
M12 x 1 straight
cable length 2 Meter

3-pole	RKC4T-2/TXL
4-pole	RKC4.4T-2/TXL
5-pole	RKC4.5T-2/TXL

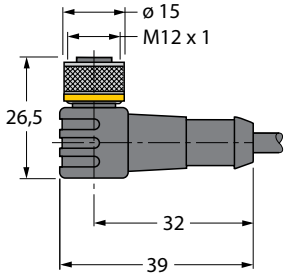

female connector
M12 x 1 angled
cable length 2 Meter

3-pole	WKC4T-2/TXL
4-pole	WKC4.4T-2/TXL
5-pole	WKC4.5T-2/TXL

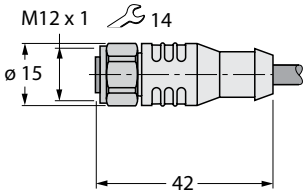

female connector
M12 x 1 straight
cable length 2 Meter

4-pole	FB-WAK4-2/S2300

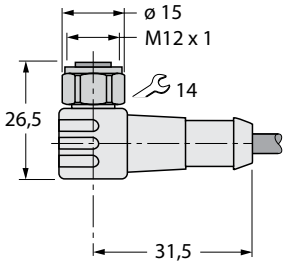

female connector
M12 x 1 straight
cable length 2 Meter
without LED

4-pole	FB-WWAK4-2/S2300

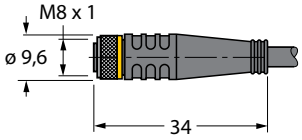

female connector
M8 x 1 straight
cable length 2 Meter

3-pole	PKG3M-2/TXL
4-pole	PKG4M-2/TXL

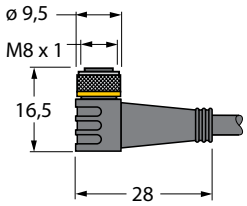

female connector
M8 x 1 angled
cable length 2 Meter

3-pole	PKW3M-2/TXL
4-pole	PKW4M-2/TXL

Proximity sensors – Accessories

We offer a complete range of accessories for operating, mounting and protection of our proximity switches. The assortment comprises function accessories and actuating elements, mounting accessories for easy and secure mounting as well as protective aids shielding against mechanical load.

Features

- Protective housing and mounting rail for CP40 sensors
- Fixing clamps for sensors in smooth or threaded barrels
- PTFE caps for M12, M18 and M30 threads, protect against weld splatter
- Test box, for functional testing of sensors
- Universal signal converter for sensors with male M12
- Mounting bracket, for more mounting flexibility

Mounting bracket

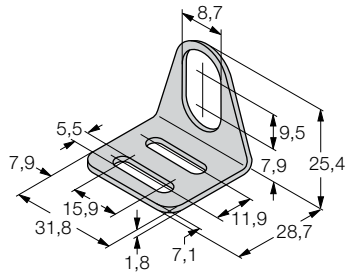

MW-08
Mounting bracket for threaded barrel devices; material: Stainless steel A2 1.4301 (AISI 304)

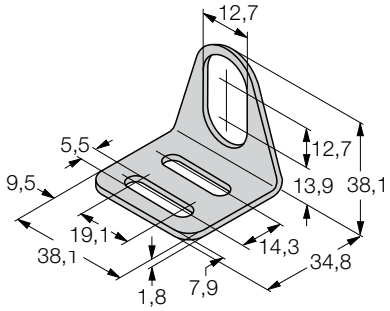

MW-12
Mounting bracket for threaded barrel devices; material: Stainless steel A2 1.4301 (AISI 304)

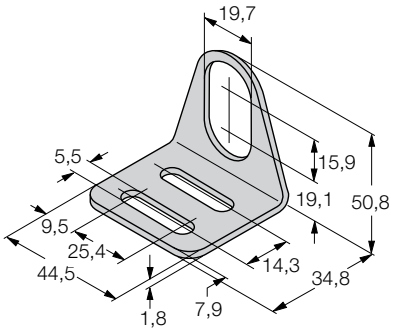

MW-18
Mounting bracket for threaded barrel devices; material: Stainless steel A2 1.4301 (AISI 304)

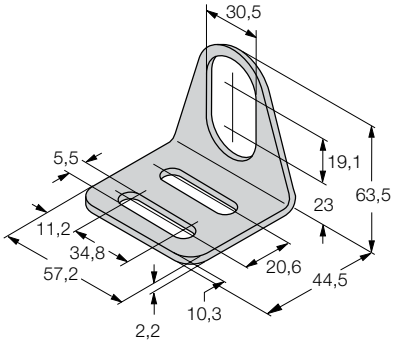

MW-30
Mounting bracket for threaded barrel devices; material: Stainless steel A2 1.4301 (AISI 304)

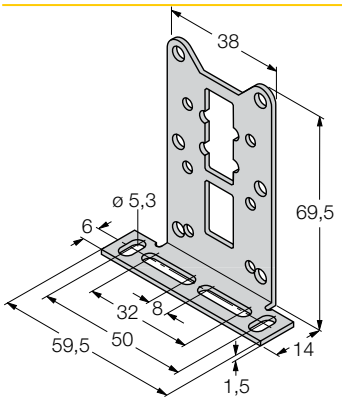

MW-Q14/Q20
Mounting bracket for rectangular Q14 or Q20; material VA 1.4301

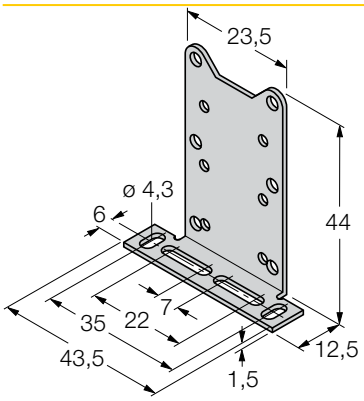

MW-Q08/Q10
Mounting bracket for rectangular Q08 or Q10; material VA 1.4301

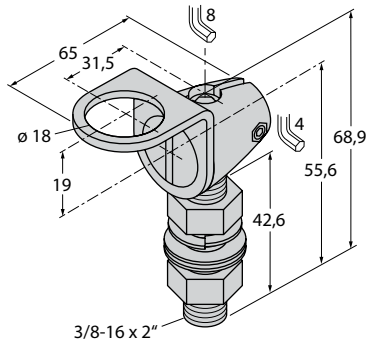

SMB18FA
Mounting bracket; material VA 1.4401, for 18 mm thread

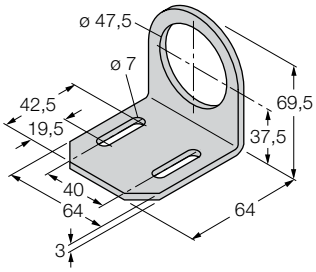

MW 47
Mounting bracket; material: Steel plate, zinc-plated

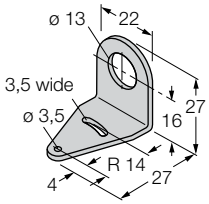

SMBQS12PD
Mounting bracket; material VA 1.4401, for Q12 series

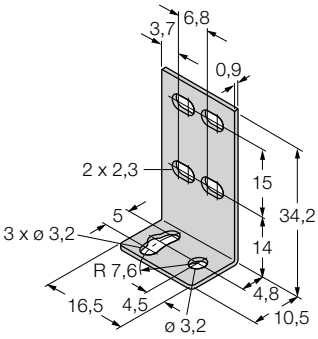

SMBQ12T
Mounting bracket; material VA 1.4401, for photoelectric sensor, Q12 series

Mounting bracket

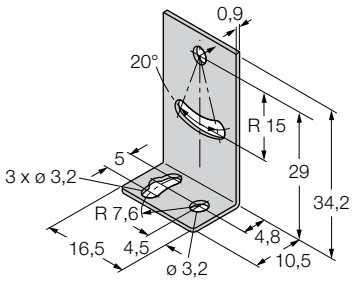

SMBQ12A
Mounting bracket; material VA 1.4401, for photoelectric sensor, Q12 series

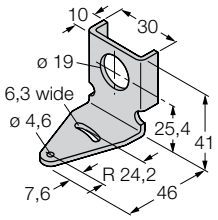

SMB18Q
Mounting bracket, stainless steel, for sensors with 18 mm thread

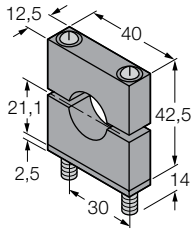

SMB18C
Mounting bracket, PBT black; with 2 screws M5 x 0.8, for sensors with 18 mm smooth barrel

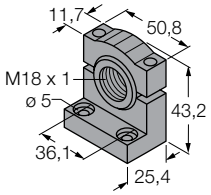

SMB18SF
Mounting bracket, PTB black steel, for sensors with 18 mm thread

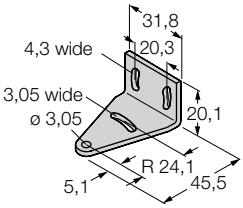

SMB312S
Mounting bracket, stainless steel, for QS18/QS18U and MINI-BEAM

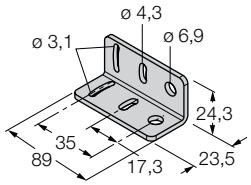

SMB312B
Mounting bracket, stainless steel, for MINI-BEAM NAMUR

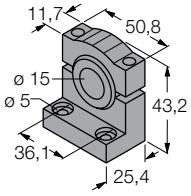

SMB1815SF
Mounting bracket, PBT black, for PICO-GUARD points

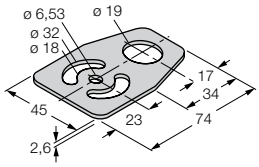

SMBAMS18P
Mounting bracket, stainless steel, for sensors with 18 mm thread

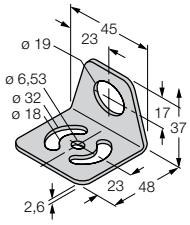

SMBAMS18RA
Mounting bracket, stainless steel, for sensors with 18 mm thread

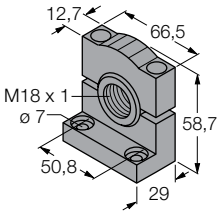

SMB3018SC
Mounting bracket, PTB black, for sensors with 18 mm thread

Mounting bracket

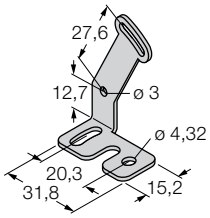

SMBQS18AF
Mounting bracket, stainless steel, for 18 mm thread

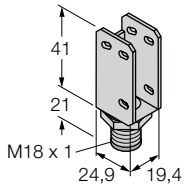

SMBQS18A
Mounting bracket, stainless steel, for 18 mm thread

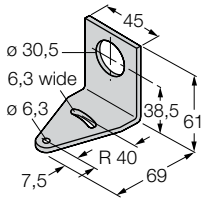

SMB30A
Mounting bracket, stainless steel, for sensors with 30 mm thread

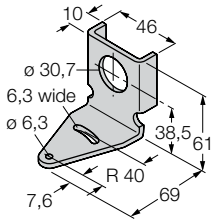

SMB30Q
Mounting bracket, stainless steel, for Q45, K50L and WL50

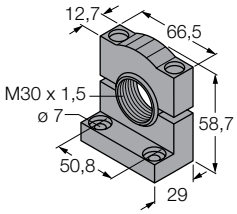

SMB30SC
Mounting bracket, PBT black; for 30 mm thread; with 4 screws M5 x 0.8

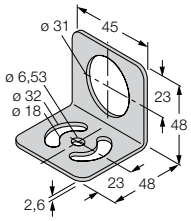

SMBAMS30RA
Mounting bracket, stainless steel, for sensors with 30 mm thread

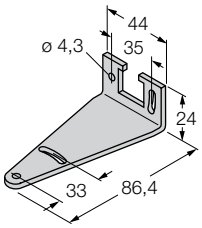

SMBQS30LT
Mounting bracket, stainless steel, for QS30 series

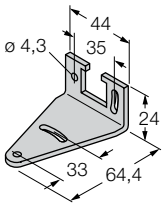

SMBQS30L
Mounting bracket, stainless steel, for QS30 series

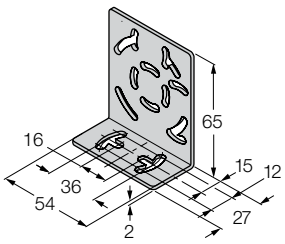

SMB46L
Mounting bracket, stainless steel, for QS18, QS30, MINI-BEAM, QM42/QMT42

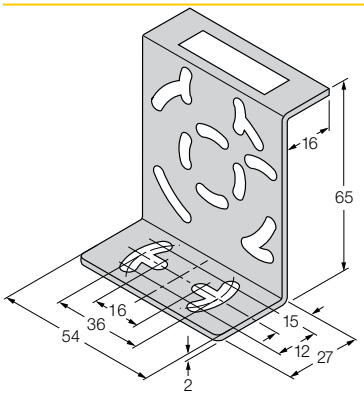

SMB46S
Mounting bracket, stainless steel, for QS18, QS30, MINI-BEAM, QM42/QMT42

Mounting bracket

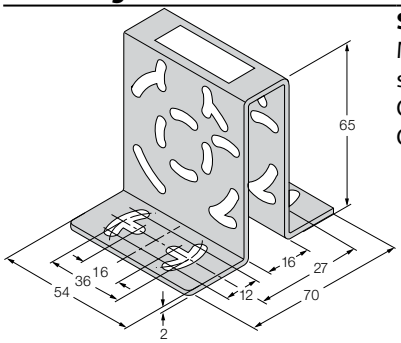

SMB46U
Mounting bracket, stainless steel, for QS18, MINI-BEAM, QM42

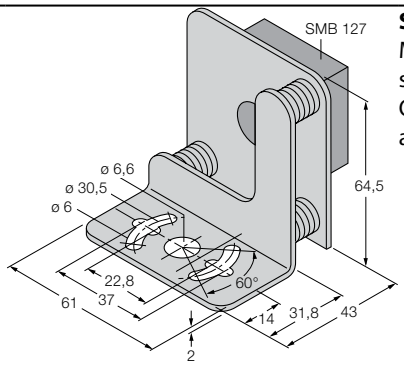

SMB46A
Mounting bracket, stainless steel, for QS18 and S18 (laser and ultrasonic types)

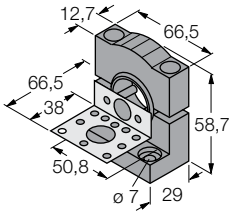

SMB30SK
Mounting bracket, PBT black, with mounting plate, stainless steel, for types with 18 mm thread, QM42/QMT42

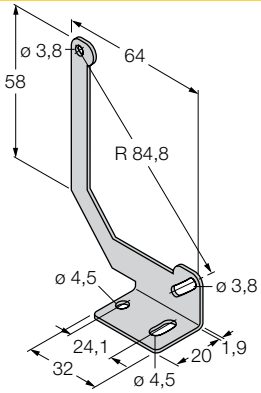

SMBQ50
Mounting bracket, stainless steel, for Q50 series

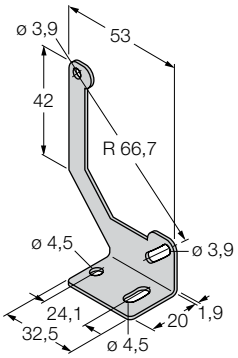

SMBQ60
Mounting bracket, stainless steel, for Q60 series

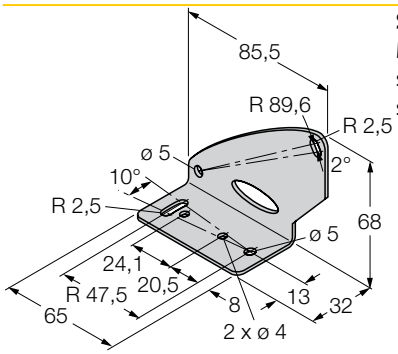

SMBLT31
Mounting bracket, stainless steel, for LT3 series

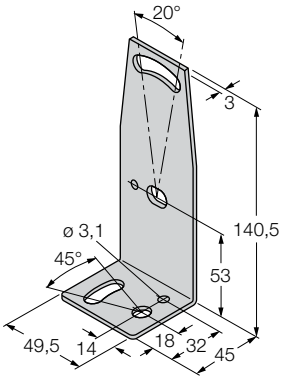

SMBLT7
Mounting bracket, stainless steel, for LT3 series

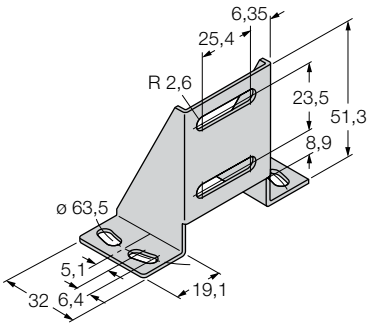

SMBLXR
Foot, galvanized steel, for LX series

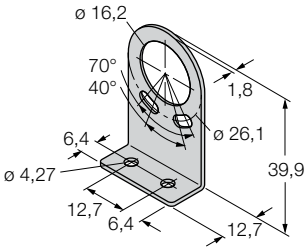

SMBLX
Mounting bracket, galvanized steel, for LX series, 2 pcs. incl. in delivery

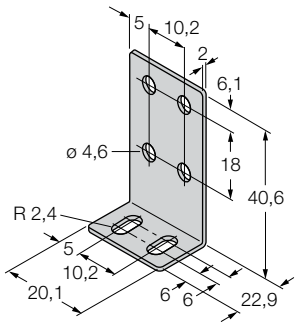

SMBPVA1
Mounting bracket, stainless steel, for PVA series

Mounting bracket

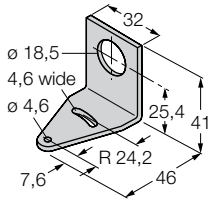

SMB18A
Mounting bracket, stainless steel, for sensors with 18 mm thread

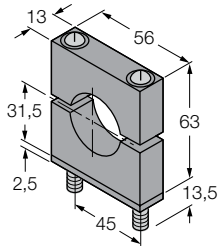

SMB30C
Mounting bracket, PBT black; with 2 screws M5 x 0.8, for sensors in 30 mm smooth barrel

Mounting panel

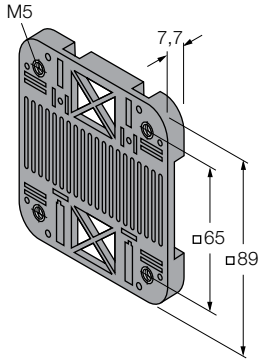

SMBDX80DIN
Mounting panel for DIN rail, suited for CP80, DX80, K80, Q80, operating temperature. -20…+90°C

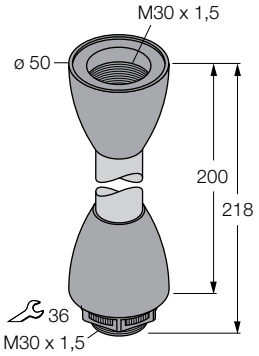

SOK-K50L-150SS
Foot for signal light K50L, stainless-steel round bar, adapter made of Acetal

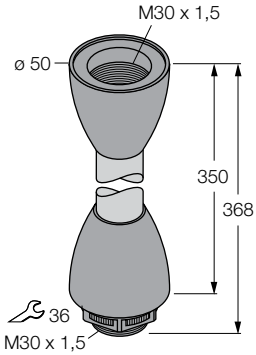

SOK-K50L-300SS
Foot for signal light K50L, stainless-steel round bar, adapter made of Acetal

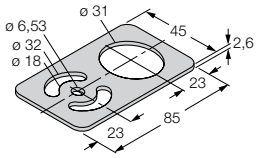

SMBAMS30P
Mounting bracket, stainless steel, for sensors with 30 mm thread

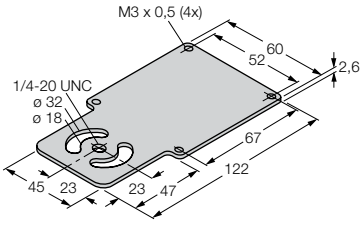

SMBAMSQ60P
Backplane, stainless steel, for Q60 series

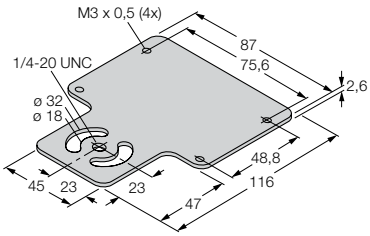

SMBAMSLT3P
Backplane, stainless steel, for LT3 series

Fixing clamps

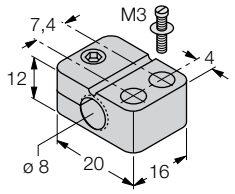

BST-08B
Fixing clamp for threaded barrel devices, with dead-stop; material: PA6

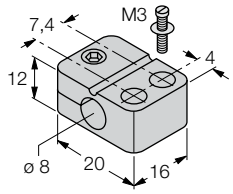

BST-08N
Fixing clamp for threaded barrel devices, without dead-stop; material: PA6

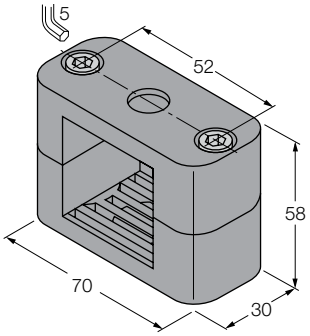

BSS-CP40
Mounting bracket for rectangular devices; material: Polypropylene

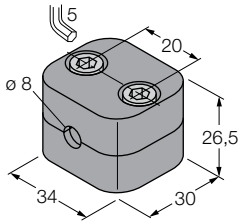

BSS-08
Mounting bracket for smooth and threaded barrel devices; material: Polypropylene

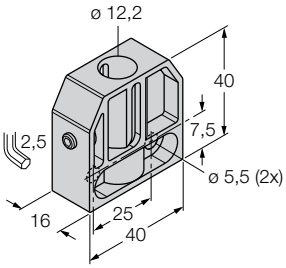

BS 12
Mounting bracket for threaded barrel devices; material: PBT-GF20

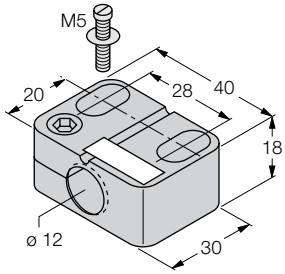

BST-12B
Fixing clamp for threaded barrel devices, with dead-stop; material: PA6

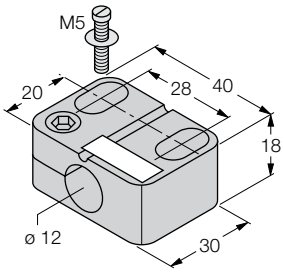

BST-12N
Fixing clamp for threaded barrel devices, without dead-stop; material: PA6

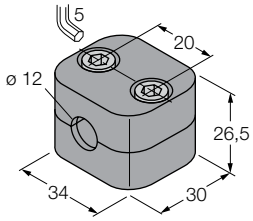

BSS-12
Mounting bracket for smooth and threaded barrel devices; material: Polypropylene

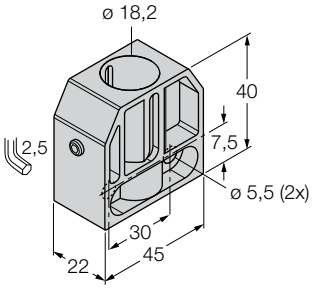

BS 18
Mounting bracket for threaded barrel devices; material: PA66-GF

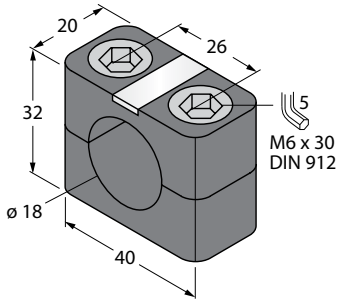

BSN 18
Fixing clamp; material: PA66-GF

Fixing clamps

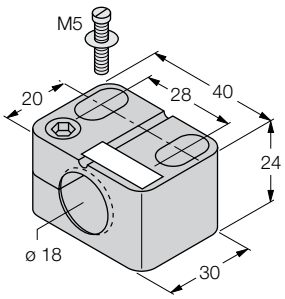

BST-18B
Fixing clamp for threaded barrel devices, with dead-stop; material: PA6

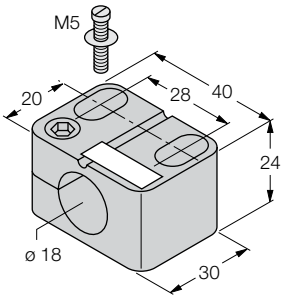

BST-18N
Fixing clamp for threaded barrel devices, without dead-stop; material: PA6

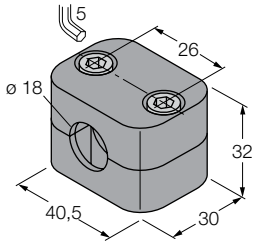

BSS-18
Mounting bracket for smooth and threaded barrel devices; material: Polypropylene

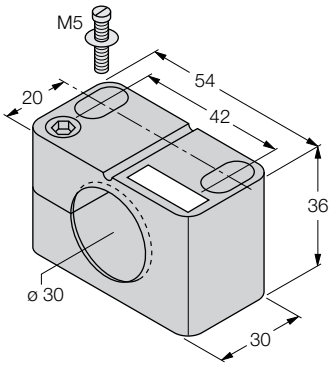

BST-30B
Fixing clamp for threaded barrel devices, with dead-stop; material: PA6

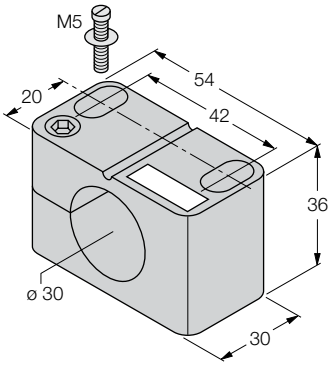

BST-30N
Fixing clamp for threaded barrel devices, without dead-stop; material: PA6

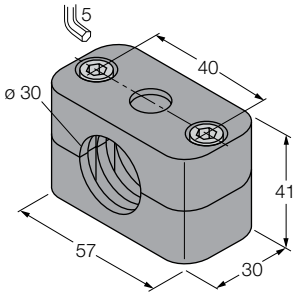

BSS-30
Mounting bracket for smooth and threaded barrel devices; material: Polypropylene

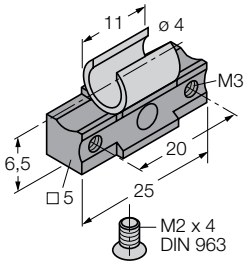

BS 540
Fixing clamp; material mounting block: Anodized aluminium; clamp sleeve: Steel

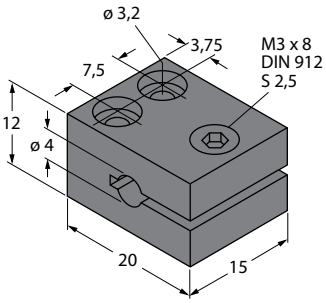

MBS40
Fixing clamp; material mounting block: Anodized aluminium

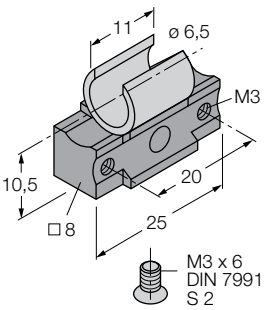

BS 865
Fixing clamp for smooth barrel devices; material mounting block: Anodized aluminium; clamp sleeve: Steel

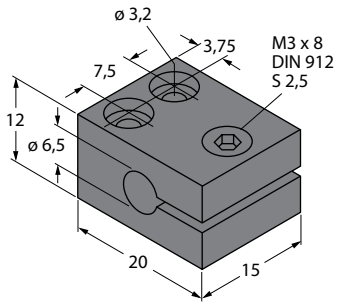

MBS65
Fixing clamp for smooth barrel devices; material mounting block: Anodized aluminium

Fixing clamps

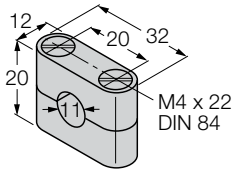

BS 11
Fixing clamp; material mounting block: PBT

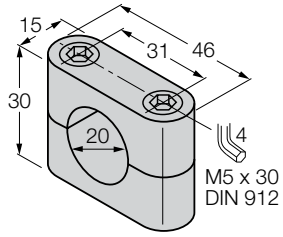

BS 20
Fixing clamp; material mounting block: PBT

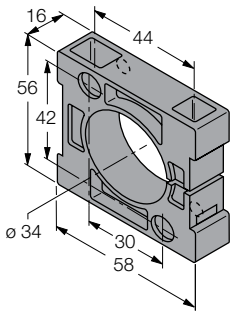

BS34.1
Fixing clamp: Mounting block material (PBT-GF20-V0); dimensions (58 mm x 56 mm x 16 mm), included in delivery (2 M5 screws for base mounting)

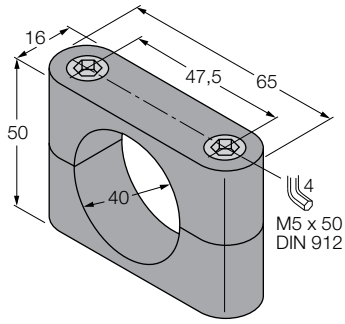

BS 40
Fixing clamp; material mounting block: PBT

Quick-mount clamp

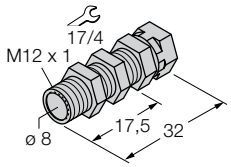

QM-08
Quick-mount bracket with dead-stop, chrome-plated brass, male thread M12 x 1. Note: The switching distance of proximity switches may be reduced through the use of quick-mount brackets.

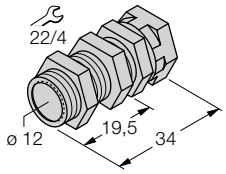

QM-12
Quick-mount bracket with dead-stop; material: Chrome-plated brass Male thread M16 x 1. Note: The switching distance of proximity switches can be reduced by the use of quick-mount brackets.

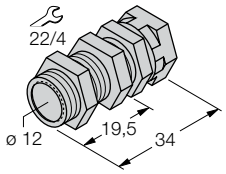

QMT-12
Quick-mount bracket with dead-stop; material: brass, PTFE-coated; male thread M16 x 1. Note: The switching distance of the proximity switches may reduce when using quick-mount brackets.

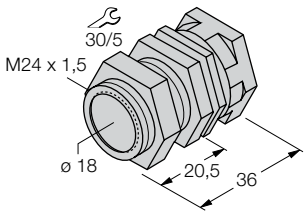

QM-18
Quick-mount bracket with dead-stop; material: Chrome-plated brass Male thread M24 x 1.5. Note: The switching distance of proximity switches can be reduced by the use of quick-mount brackets.

Quick-mount clamp

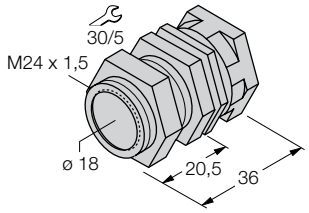

QMT-18
Quick-mount bracket with dead-stop; material: brass, PTFE-coated; male thread M24 x 1,5. Note: The switching distance of the proximity switches may reduce when using quick-mount brackets.

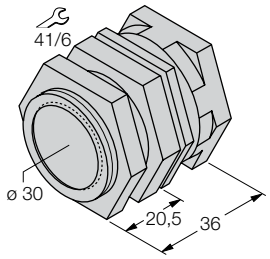

QM-30
Quick-mount bracket with dead-stop; material: Chrome-plated brass Male thread M36 x 1.5. Note: The switching distance of proximity switches can be reduced by the use of quick-mount brackets.

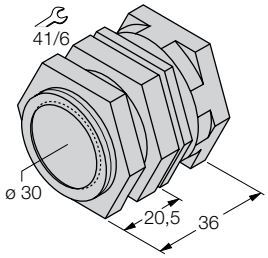

QMT-30
Quick-mount bracket with dead-stop; material: brass, PTFE-coated; male thread M36 x 1.5. Note: The switching distance of the proximity switches may reduce when using quick-mount brackets.

Mounting rail

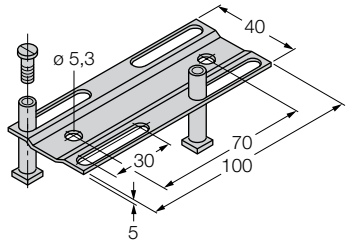

JS 025/037
Mounting rail for rectangular housings CK/CP40; material: VA 1.4301

Spacer rollers

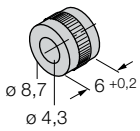

MH-Q14
Mounted with active face downwards, for Q14

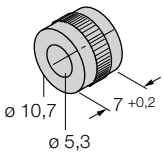

MH-Q20
Mounted with active face downwards, for Q20

Protective housing

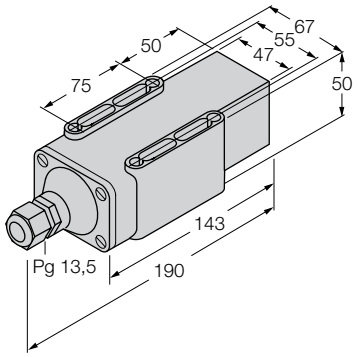

SG40/2 (ULTEM)
Protective frame for CP40; material housing/cover: ULTEM; temperature resistant up to +170 °C, especially UV and ozone resistant; protection class IP 68, 5 m w.g.

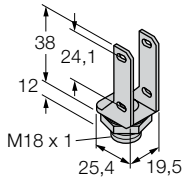

SMBQS18Y
Protective housing, stainless steel, for QS18 series

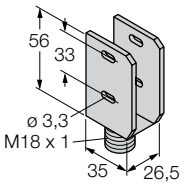

SMBQS30Y
Protective housing, stainless steel, for QS30 series

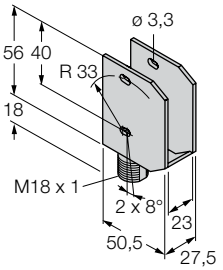

SMBQS30YL
Protective housing with safety glas panel, stainless steel, for QS30 series

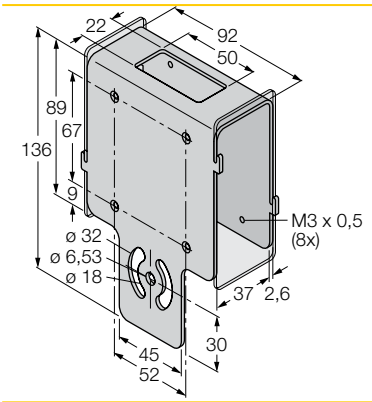

SMBAMSQ60IP
Protective housing with safety glas panel, stainless steel, for Q60

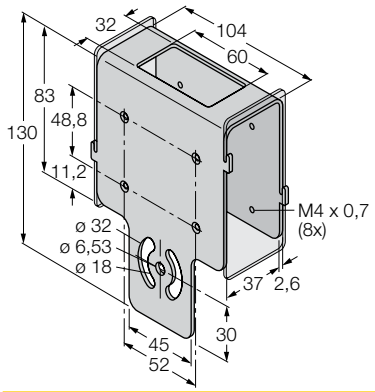

SMBAMSLT3IP
Protective housing with safety glas panel, for LT3 series

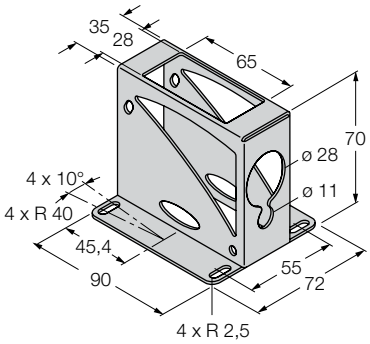

SMBLT32
Protective housing, stainless steel, for LT3 series

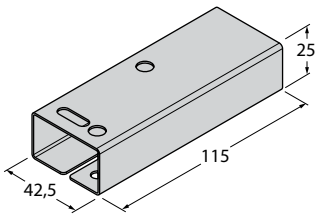

SG-Q20L60
Protective frame for Q20L60; protects against mechanical impact; stainless steel

Protective frames

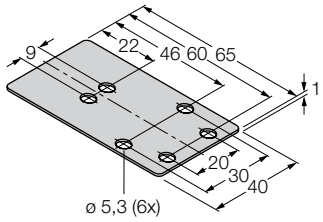

MF-CK40-1S
Protective frame (one side) rectangular CK40

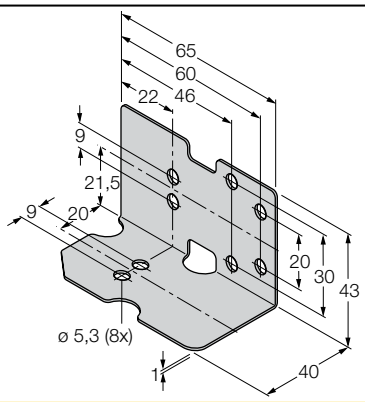

MF-CK40-2S
Protective frame (angle) for rectangular CK40

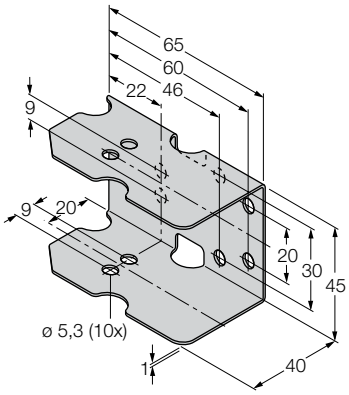

MF-CK40-3S
Protective frame (U profile) CK40

Protective caps

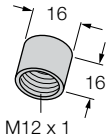

SKN/M12
PTFE-coated caps; for use in welding systems and grinding machinery; protection against intense sparking

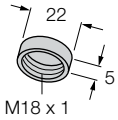

SKN/M18
PTFE-coated caps; for use in welding systems and grinding machinery; protection against intense sparking

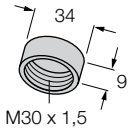

SKN/M30
PTFE-coated caps; for use in welding systems and grinding machinery; protection against intense sparking

Protecting nuts

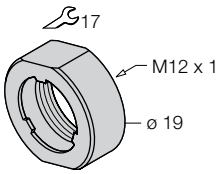

PN-M12
Impact protection nut for M12x1 threaded barrel devices; material: Stainless steel A2 1.4305 (AISI 303)

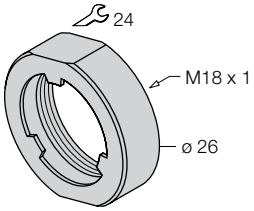

PN-M18
Impact protection nut for M18x1 threaded barrel devices; material: Stainless steel A2 1.4305 (AISI 303)

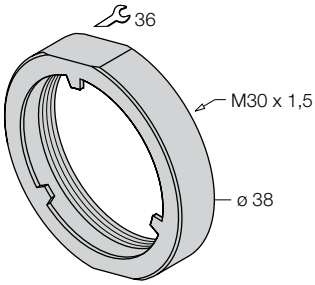

PN-M30
Impact protection nut for M30x1 threaded barrel devices; material: Stainless steel A2 1.4305 (AISI 303)

Safety clips

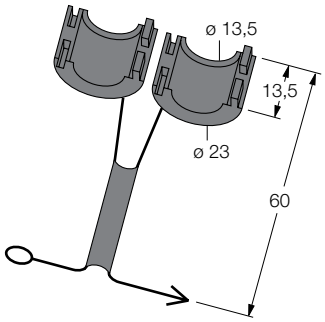

SC-M12/3GD
Captive safety clip for sensors with M12 x 1 connectors and approval according to ATEX II 3 G or II 3 D

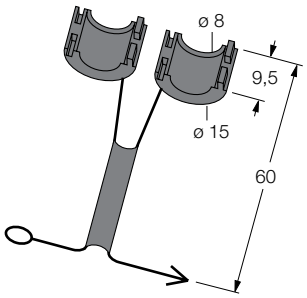

SC-M8/3GD
Captive safety clip for sensors with M8 x 1 connectors and approval according to ATEX II 3 G or II 3 D

Adapter

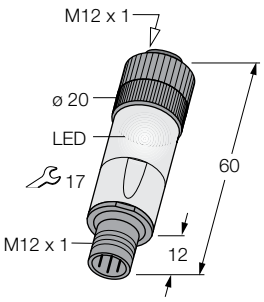

SPF1-AP6X
Adapter for rotational speed monitor

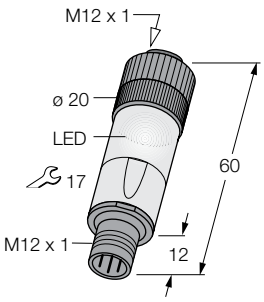

SPN1-AP6-ARN6X
Adapter for pnp/npn switch function

Adapter

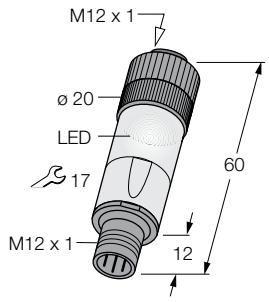

SPT1-AP6X
Adapter with switch-ON/OFF delay

Test and configuration devices

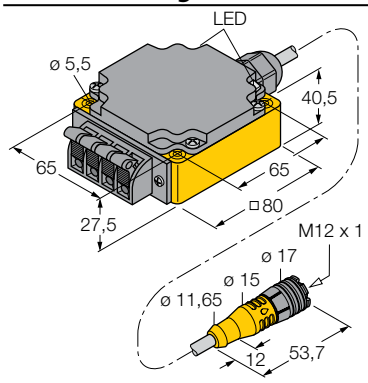

TB3-CP80
Universal test device for pnp, npn and NAMUR sensors

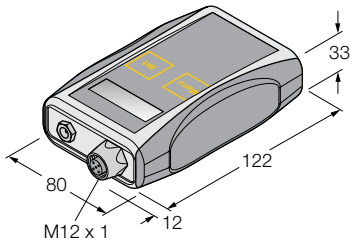

TB4
Universal test and configuration device for analog an binary sensors.

Dual sensors for rotary actuators – Accessories

TURCK's comprehensive product portfolio of sensors and matching accessories for position feedback enables cost-effective planning, commissioning and operation of systems. Different actuating elements allow the application on clockwise and counter-clockwise rotating drives and for altering switchpoints.

Features

- Broad range of actuating elements and accessories
- Highly resistant to chemicals and cleaning agents
- For all standard actuator sizes
- Rugged design

Dual sensors DSC26 – Actuator sets

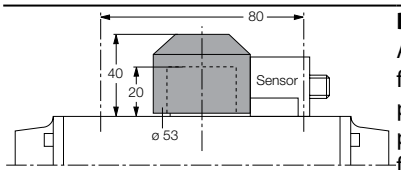

BTS-DSC26-EB1
Actuation kit (puck) for dual sensors; end position damped; hole pattern on flange surface 80 x 30 mm and 130 x 30 mm; connection shaft (shaft extension) height 20 mm / Ø max. 35 mm

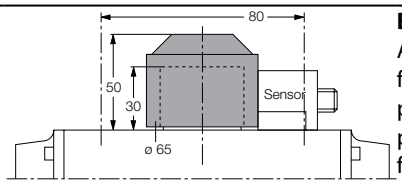

BTS-DSC26-EB2
Actuation kit (puck) for dual sensors; end position damped; hole pattern on flange surface 80 x 30 mm and 130 x 30 mm; connection shaft (shaft extension) height 30 mm / Ø max. 50 mm

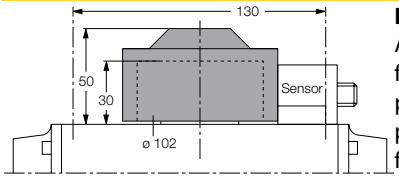

BTS-DSC26-EB3
Actuation kit (puck) for dual sensors; end position damped; hole pattern on flange surface 30 x 130 mm; connection shaft (shaft extension) height 30 mm / Ø max. 85 mm

Dual sensors DSU35 – Actuator sets

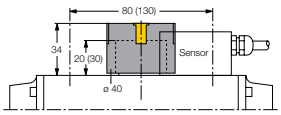

BTS-DSU35-EB1
Actuation kit (puck) for dual sensors; end position damped; hole pattern on flange surface 80 x 30 mm and 130 x 30 mm; connection shaft (shaft extension) height 20 mm / Ø max. 30 mm

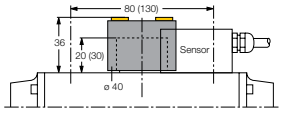

BTS-DSU35-EU2
Actuation kit (puck) for dual sensors; end position undamped for clockwise and counter-clockwise drives; hole pattern on flange surface 80 x 30 mm and 130 x 30 mm; connection shaft (shaft stud) height 20 (30) mm / Ø max. 30 mm

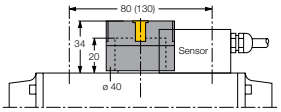

BTS-DSU35-EBE1
Actuation kit (puck), end position damped and switchpoint adjustable; hole pattern on flange surface 80 x 30 mm (130 x 30 mm); connection shaft (shaft extension) height 20 / Ø max. 30 mm

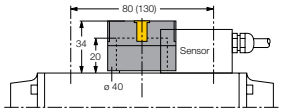

BTS-DSU35-EBE3
Actuation kit (puck) for dual sensors; end position damped; „open“ and „closed“ switchpoint adjustable; hole pattern on flange surface 80 x 30 mm and 130 x 30 mm; connection shaft (shaft extension) height 20 / Ø max. 30 mm

Dual sensors DSU35 – Actuator sets

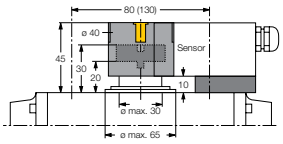

BTS-DSU35-Z01
Mounting kit dual sensors, for larger rotary actuators: Spacer plate and snap ring max. Ø 65 mm; hole pattern on flange surface 30 x 80 mm (30 x 130 mm); connection shaft (shaft extension) height 30 mm / Ø max. 30 mm

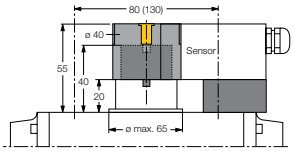

BTS-DSU35-Z02
Mounting kit dual sensors, for larger rotary actuators: Ø disc and snap ring max. 65 mm; hole pattern on flange surface 30 x 80 mm (30 x 130 mm); connection shaft (shaft extension) height 20 (30) mm / Ø max. 40 mm

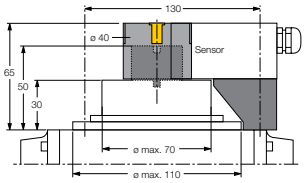

BTS-DSU35-Z03
Mounting kit dual sensors, for larger rotary actuators: Ø disc and snap ring max.110 mm; hole pattern on flange surface 30 x 130 mm; connection shaft (shaft extension) height 30 mm / Ø max. 70 mm

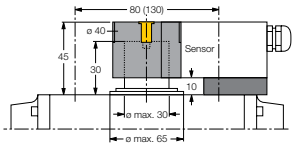

BTS-DSU35-Z04
Mounting kit for larger rotary actuators: Ø disc and snap ring max. 65 mm; hole pattern on flange surface 30 x 80 mm (30 x 130 mm); connection shaft (shaft extension) height 30 mm / Ø max. 30 mm

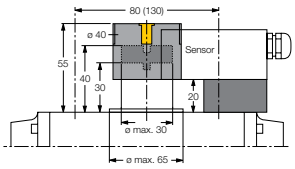

BTS-DSU35-Z05
Mounting kit for larger rotary actuators: Ø disc and snap ring max. 65 mm; hole pattern on flange surface 30 x 80 mm (30 x 130 mm); connection shaft (shaft extension) height 30 mm / Ø max. 30 mm

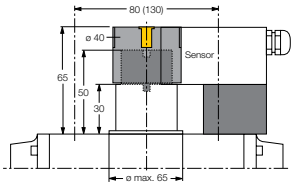

BTS-DSU35-Z06
Mounting kit dual sensors, for larger rotary actuators: Spacer plate and snap ring max. Ø 65 mm; hole pattern on flange surface 30 x 80 mm (30 x 130 mm); connection shaft (shaft extension) height 30 mm / Ø max. 40 mm

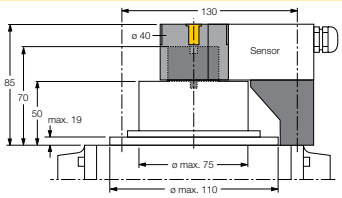

BTS-DSU35-Z07
Mounting kit dual sensors, for larger rotary actuators: Ø disc and snap ring max.110 mm; hole pattern on flange surface 30 x 130 mm; connection shaft (shaft extension) height 50 mm / Ø max. 75 mm

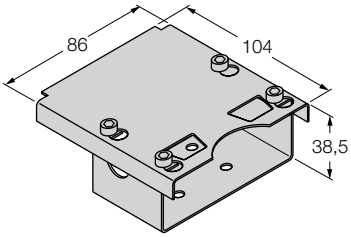

SG-DSU35TC
Protective housing for dual sensors, series DSU35, for mechanically protected installation in the explosion hazardous area

Magnetic field sensors – Accessories

The permanent magnets are used as actuating elements for magnetic inductive proximity sensors or as positioning elements for magnetic inductive linear position sensors. Despite the small size, they achieve larger switching distances compared to inductive sensors. They fit in narrow spaces and are ideal for difficult sensing conditions such as hangar doors with poor guiding control for example.

Features

- Strontium ferrite magnets, rugged and resistant to chemicals
- Rectangular polyamide magnet
- Switching distance up to 90 mm on BIM-(E)M12 sensors
- Switching distance up to 78 mm on BIM-EG08 sensors
- Recommended distance between magnet and WIM-Q25L sensor 3 to 5 mm

Actuating magnets

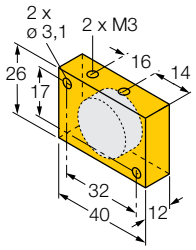

DM-Q12
Actuation magnet; cuboid-shaped plastic; sensing range 58 mm on BIM-(E)M12 sensors resp. 49 mm on BIM-EG08 sensors; in combination with Q25: Recommended distance between sensor and magnet:
3 … 5 mm

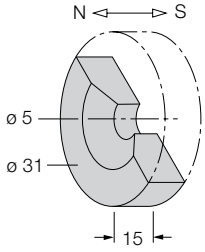

DMR31-15-5
Actuation magnet, Ø 31 mm (Ø 5 mm), h: 15 mm; sensing range 90 mm on BIM-(E)M12 sensors resp. 78 mm on BIM-EG08 sensors; in combination with Q25L: Recommended distance between sensor and magnet:
3 … 5 mm

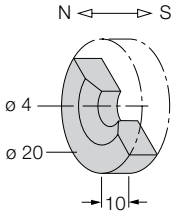

DMR20-10-4
Actuation magnet; Ø 20 mm (Ø 4 mm), h: 10 mm; sensing range 59 mm on BIM-(E)M12 sensors resp. 50 mm on BIM-EG08 sensors; in combination with Q25L: Recommended distance between sensor and magnet:
3 … 4 mm

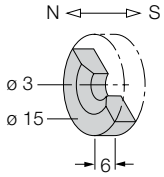

DMR15-6-3
Actuation magnet, Ø 15 mm (Ø 3 mm), h: 6 mm; sensing range 36 mm on BIM-(E)M12 sensors resp. 32 mm on BIM-EG08 sensors; in combination with Q25L: Recommended distance between sensor and magnet:
3 … 4 mm

Accessories for UNT

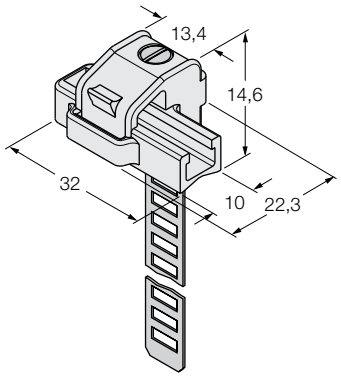

KLRC-UNT1
Accessories for mounting on round cylinders; diameter: 8…25 mm; material: PA 6I/6T / nickel silver; Fire-hazard classification acc. to UL94 - V2

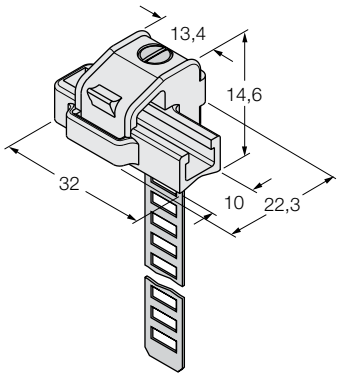

KLRC-UNT2
Accessories for mounting on round cylinders; diameter: 25…63 mm; material: PA 6I/6T / nickel silver; Fire-hazard classification acc. to UL94 - V2

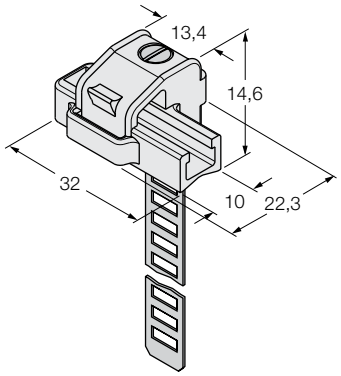

KLRC-UNT3
Accessories for mounting the BIM-UNT sensor on round cylinders; diameter: 63…130 mm; material: PA 6I/6T / nickel silver; Fire-hazard classification acc. to UL94 - V2

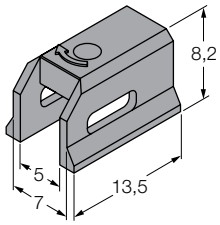

KLDT-UNT2
Accessories for mounting the BIM-UNT sensor on dovetail groove cylinders; groove width: 7 mm; material: PPS

Accessories for UNT

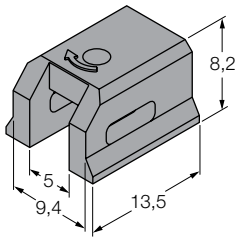

KLDT-UNT3
Accessories for mounting the BIM-UNT sensor on dovetail groove cylinders; groove width: 9.4 mm; material: PPS

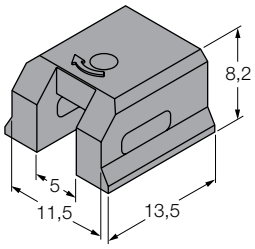

KLDT-UNT4
Accessories for mounting the BIM-UNT sensor on dovetail groove cylinders; groove width: 11.5 mm; material: PPS

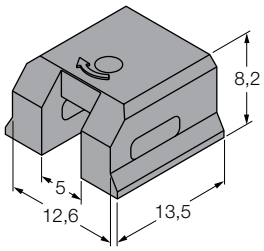

KLDT-UNT5
Accessories for mounting the BIM-UNT sensor on dovetail groove cylinders; groove width: 12.6 mm; material: PPS

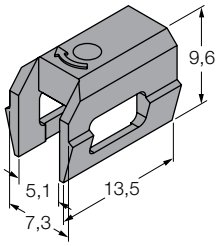

KLDT-UNT6
Accessories for mounting on dovetail groove cylinders; groove width: 7.35 mm; material: PPS

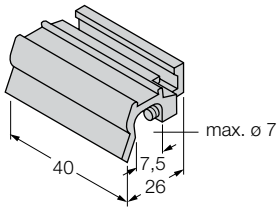

KLZ1-INT
Accessories for mounting the BIM-UNT sensor on tie-rod cylinders; diameter: 32…40 mm; material: Aluminium; further mounting accessories for other cylinder diameters on request

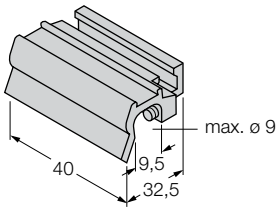

KLZ2-INT
Accessories for mounting the BIM-UNT sensor on tie-rod cylinders; diameter: 50…63 mm; material: Aluminium; further mounting accessories for other cylinder diameters on request

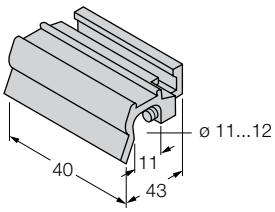

KLZ3-INT
Accessories for mounting the BIM-UNT sensor on tie-rod cylinders; diameter: 80…100 mm; material: Aluminium; further mounting accessories for other cylinder diameters on request

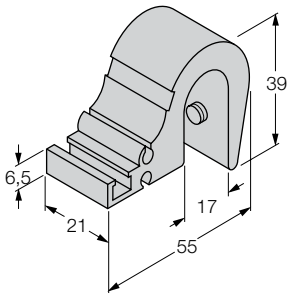

KLZ5-INT
Mounting on tie-rod cylinder; cylinder diameter: 160…200 mm; material: Aluminium; further mounting accessories for other cylinder diameters on request

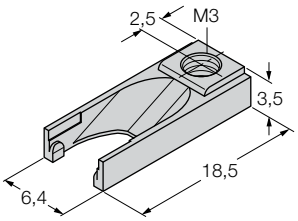

UNT-Stopper
Accessories to secure the switchpoint on T-groove cylinders; snap-lock mounting in the BIM-UNT sensor fixture; material: Plastic

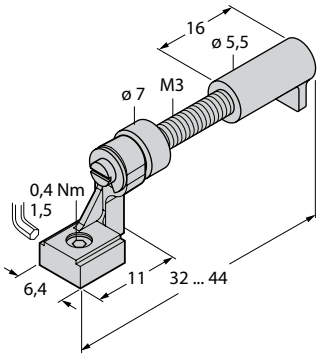

UNT-Justage
Accessories for fine-tuning of the switchpoint on T-groove cylinders; snap-lock mounting in the sensor fixture; suited for multiple use; material: Metal/plastic

Accessories for WIM

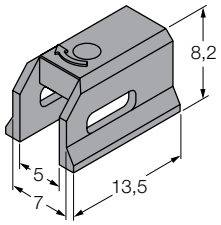

KLDT-UNT2
Accessories for mounting the BIM-UNT sensor on dovetail groove cylinders; groove width: 7 mm; material: PPS

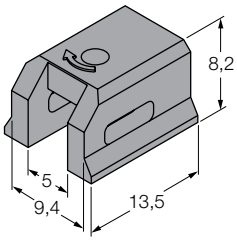

KLDT-UNT3
Accessories for mounting the BIM-UNT sensor on dovetail groove cylinders; groove width: 9.4 mm; material: PPS

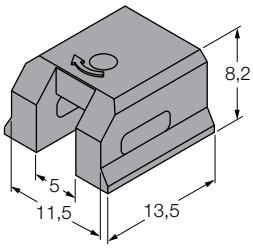

KLDT-UNT4
Accessories for mounting the BIM-UNT sensor on dovetail groove cylinders; groove width: 11.5 mm; material: PPS

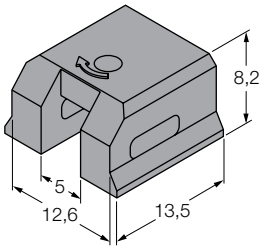

KLDT-UNT5
Accessories for mounting the BIM-UNT sensor on dovetail groove cylinders; groove width: 12.6 mm; material: PPS

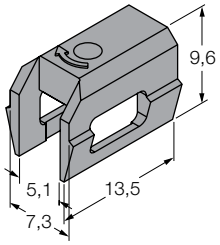

KLDT-UNT6
Accessories for mounting on dovetail groove cylinders; groove width: 7.35 mm; material: PPS

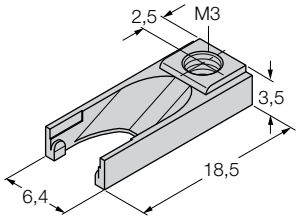

UNT-Stopper
Accessories to secure the switchpoint on T-groove cylinders; snap-lock mounting in the BIM-UNT sensor fixture; material: Plastic

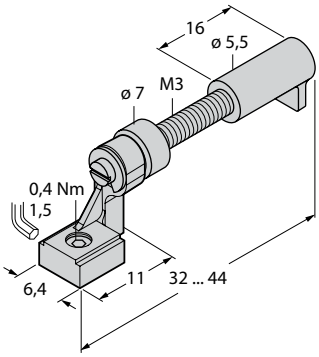

UNT-Justage
Accessories for fine-tuning of the switchpoint on T-groove cylinders; snap-lock mounting in the sensor fixture; suited for multiple use; material: Metal/plastic

Accessories for NST

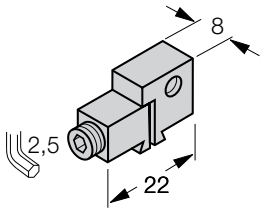

KLN 3
Mounting on Dovetail groove cylinders or T-groove cylinders; clamping width 5.2…13.5 mm; material: Anodized aluminium

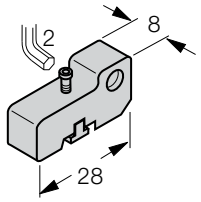

KLN-SMC
Mounting on SMC cylinders; clamping width 4 mm; material: Anodized aluminium

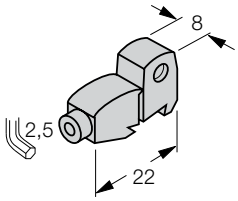

KLF 1
Mounting on external dovetail grooves; for all cylinder diameters, material: Anodized aluminium

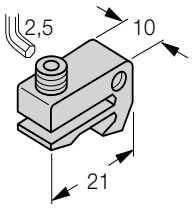

KLF 2
Mounting on external dovetail grooves (IMI Norgrem); for all cylinder diameters, material: Anodized aluminium

Accessories for IKT

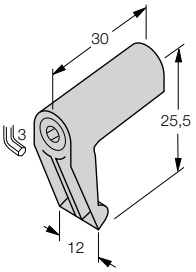

KLI 1
Mounting on tie-rod cylinders; cylinder diameter 32…100 mm; material: Die-cast zinc

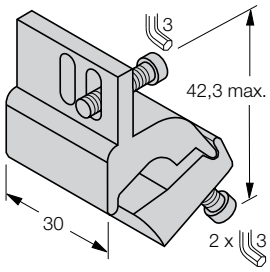

KLI 5Z
Mounting on tie-rod cylinders; cylinder diameter 32…63 mm; material: Aluminum

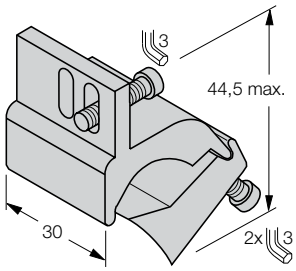

KLI 6Z
Mounting on tie-rod cylinders; cylinder diameter 50…125 mm; material: Aluminum

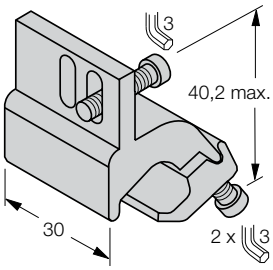

KLI 5
Mounting on profile cylinder; cylinder diameter 32…50 mm; material: Aluminium

Accessories for IKT

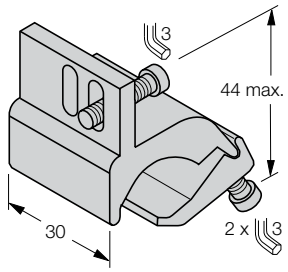

KLI 6
Mounting on profile cylinder; cylinder diameter 50…100 mm; material: Aluminium

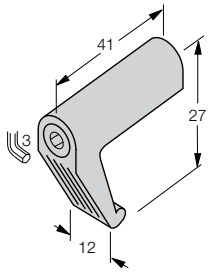

KLI 3
Mounting on tie-rod cylinders; cylinder diameter 63…160 mm; material: Die-cast zinc

Inductive linear position sensors – Accessories

The range of accessories includes guided and floating positioning elements as well as different mounting aids for linear position sensors. The individual measuring range is easily set via teach adapter. The sensors are thus easily adjusted to the correspondent application. The programmed measuring range can be tested with the analog test box.

Features

- Broad range of positioning elements and mounting accessories
- Highest mounting flexibility
- Guided and floating positioning elements

Accessories for inductive sensors Li-Q25L

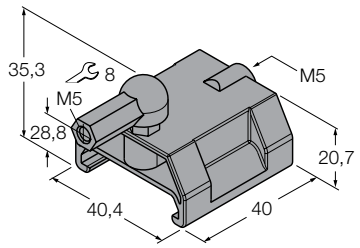

P1-Li-Q25L
Guided positioning element for Li-Q25L, inserted in the sensor guide.

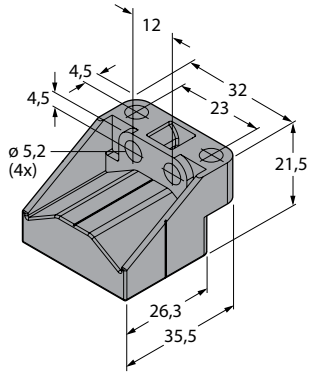

P2-Li-Q25L
Floating positioning element for Li-Q25L.

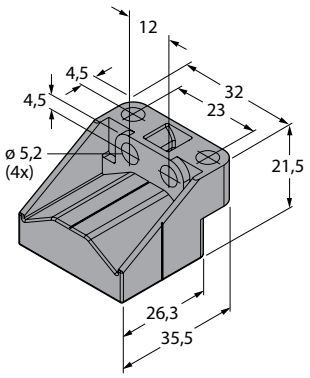

P3-Li-Q25L
Free positioning element for Li-Q25L, offset mountable by 90°

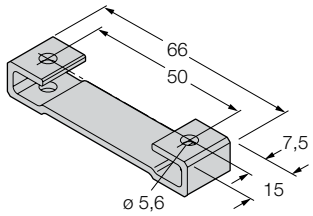

M1-Q25L
Mounting foot for linear position sensor Q25L; aluminium; 2 pcs. per bag

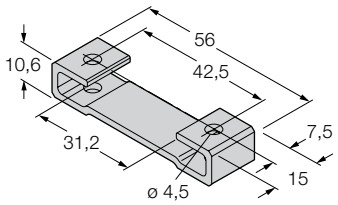

M2-Q25L
Mounting foot for linear position sensor Q25L; aluminium; 2 pcs. per bag

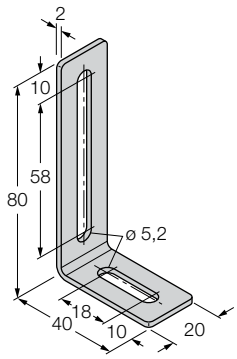

M4-Q25L
Mounting bracket for linear position sensor Q25L; material Stainless steel; 2 pcs. per bag

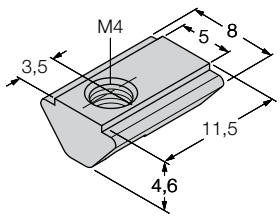

MN-M4-Q25
Sliding block with M4 thread for the backside profile of the Q25L; material Brass; 10 pcs. per bag

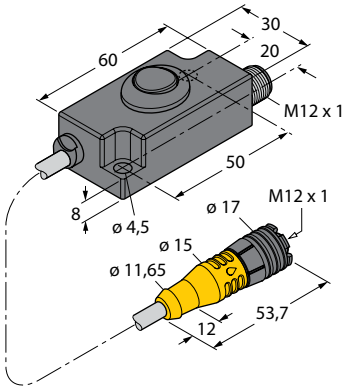

TX1-Q20L60
Teach adapter for inductive linear position and angle sensors

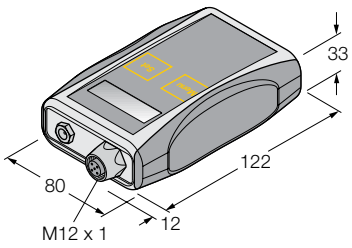

TB4
Universal test and configuration device for analog an binary sensors.

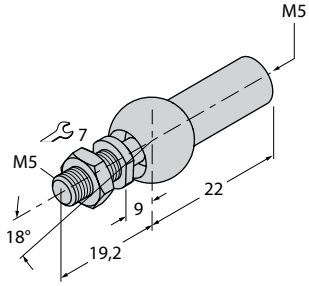

AB-M5
Axial joint for Li-Q25L specific guided positioning elements

Accessories for inductive sensors Li-Q25L

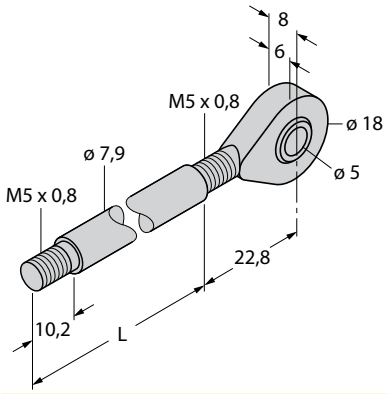

CA100
Extension bar for the positioning element;
L = 100 mm

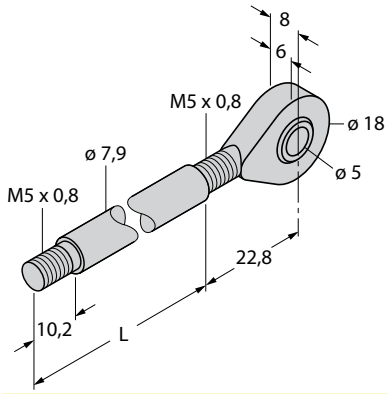

CA200
Extension bar for positioning element;
L = 200 mm

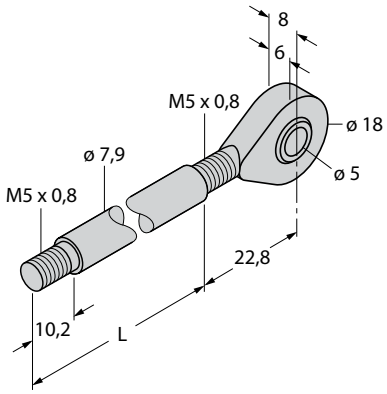

CA300
Extension bar for positioning element;
L = 300 mm

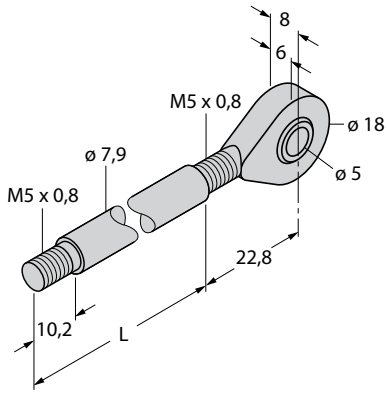

CA400
Extension bar for the positioning element;
L = 400 mm

Accessories for magnetic sensors WIM-Q25L

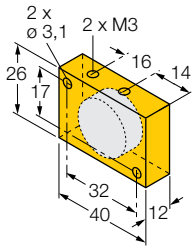

DM-Q12
Actuation magnet; cuboid-shaped plastic; sensing range 58 mm on BIM-(E)M12 sensors resp. 49 mm on BIM-EG08 sensors; in combination with Q25: Recommended distance between sensor and magnet:
3 … 5 mm

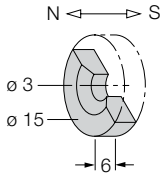

DMR15-6-3
Actuation magnet, Ø 15 mm (Ø 3 mm), h: 6 mm; sensing range 36 mm on BIM-(E)M12 sensors resp. 32 mm on BIM-EG08 sensors; in combination with Q25L: Recommended distance between sensor and magnet:
3 … 4 mm

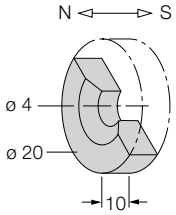

DMR20-10-4
Actuation magnet; Ø 20 mm (Ø 4 mm), h: 10 mm; sensing range 59 mm on BIM-(E)M12 sensors resp. 50 mm on BIM-EG08 sensors; in combination with Q25L: Recommended distance between sensor and magnet:
3 … 4 mm

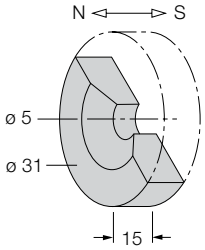

DMR31-15-5
Actuation magnet, Ø 31 mm (Ø 5 mm), h: 15 mm; sensing range 90 mm on BIM-(E)M12 sensors resp. 78 mm on BIM-EG08 sensors; in combination with Q25L: Recommended distance between sensor and magnet:
3 … 5 mm

Accessories for magnetic sensors WIM-Q25L

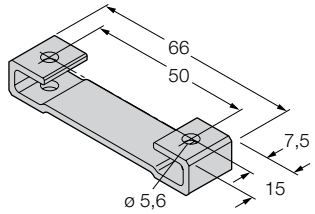

M1-Q25L
Mounting foot for linear position sensor Q25L; aluminium; 2 pcs. per bag

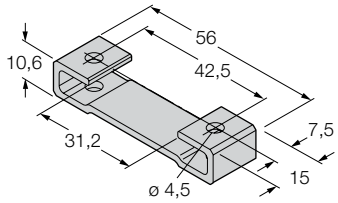

M2-Q25L
Mounting foot for linear position sensor Q25L; aluminium; 2 pcs. per bag

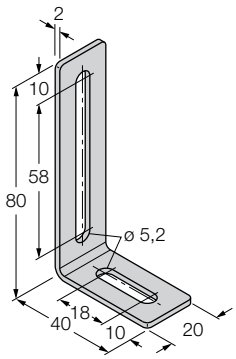

M4-Q25L
Mounting bracket for linear position sensor Q25L; material Stainless steel; 2 pcs. per bag

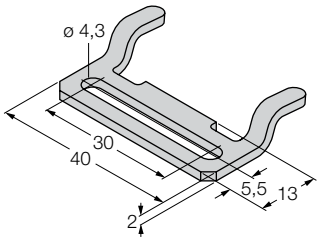

MB1-Q25
Mounting clip for linear position sensor Q25L; material Stainless steel; 2 pcs. per bag

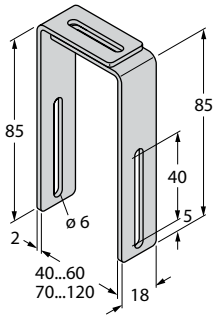

MB2.1-Q25
Mounting bracket for linear position sensors Q25L; mounting on pneumatic cylinders (40…60 mm); material: Stainless steel; 4 pcs. per bag

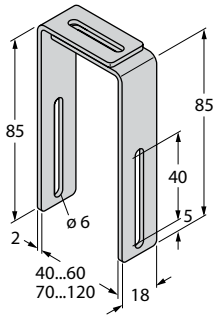

MB2.2-Q25
Mounting bracket for linear position sensors Q25L; mounting on pneumatic cylinders (70…120 mm); material: Stainless steel; 4 pcs. per bag

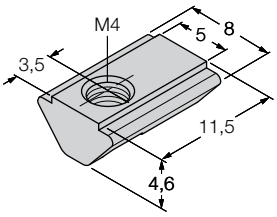

MN-M4-Q25
Sliding block with M4 thread for the backside profile of the Q25L; material Brass; 10 pcs. per bag

Magnetostrictive linear position sensors – Accessories

The range of accessories for linear position sensors includes actuation magnets as well as mounting aids for installation in hydraulic cylinders or outside to detect the position of a moving unit. The magnets are also available as floating actuators for the detection of filling levels in stainless steel containers.

Features

- Broad range of positioning elements and mounting accessories for many different applications

Accessories for magnetostrictive linear position sensors LTX

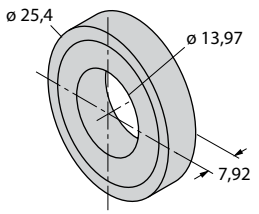

CM-R10
standard cylinder magnet

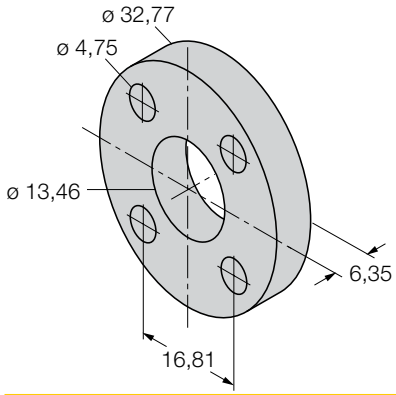

STS-R10
Standard spacer disc It consists of non-ferritic metal and is used to separate the positioning magnet from the head piece of the hydraulic piston rod.

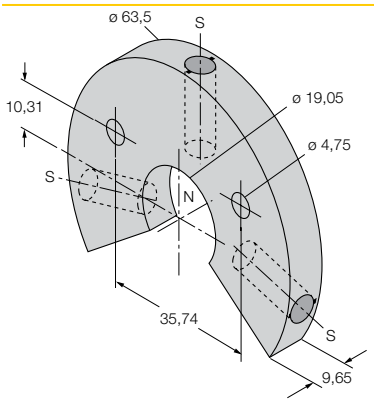

LSPM-AL-R10
large ring magnet with slot, aluminium

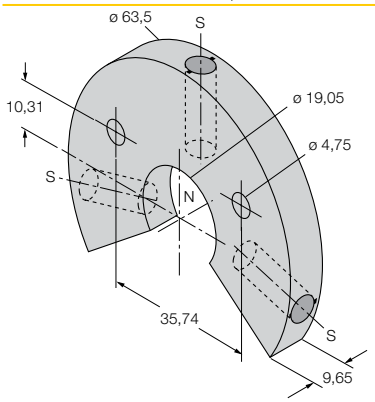

LSPM-SS-R10
Large ring magnet with slot, stainless steel

Accessories for magnetostrictive linear position sensors LTX

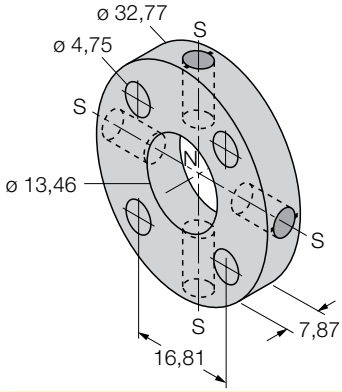

STM-AL-R10
standard 4-hole magnet, aluminium

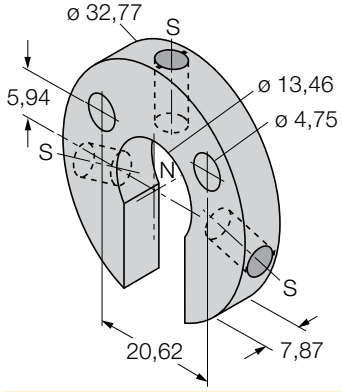

SPM-AL-R10
Small ring magnet with slot, aluminium

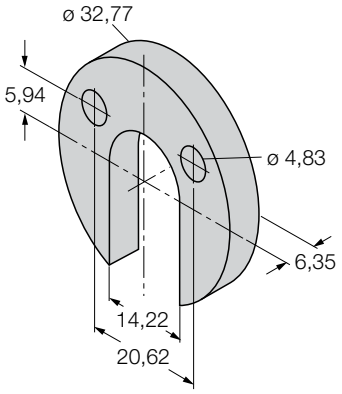

SPS-R10
spacer disk for ring magnet with slot

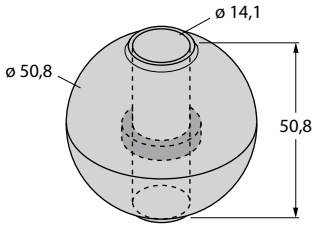

EF-R10
Float magnet, stainless steel, specific weigth 0.62

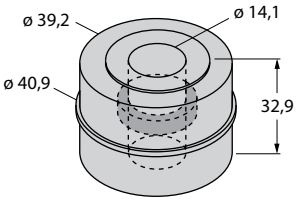

MF-R10
Small float, stainless steel, specific weigth 0.66

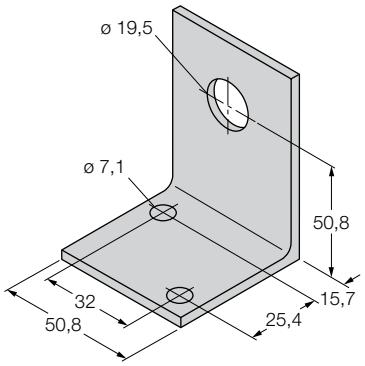

MB-R10
Sensor head fixing clamp

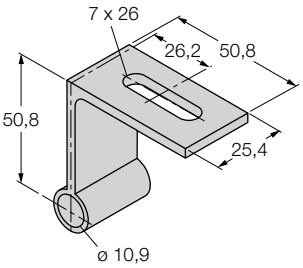

RB-R10
Rod fixing clamp

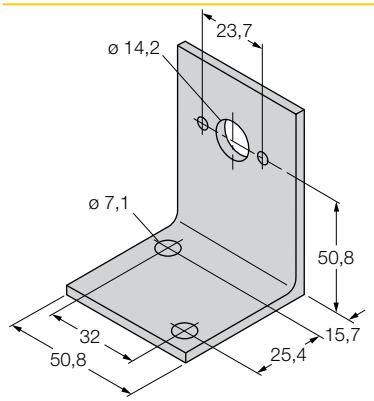

LB-R10
Magnet fixing clamp

Inductive angle sensors – Accessories

Angle sensors can be mounted in many different ways with the range of available adapters. The positioning element floating freely above the sensors can be changed from a hollow shaft to a 6 or 8 mm solid shaft connection. The sensor can also be mounted on the rear side with spacer sleeves.

Features

- Mounting accessories for shafts
- Mounting accessories for rear mounting
- Teach adapter to adjust the measuring range

Accessories for inductive angle sensors Ri-QR14

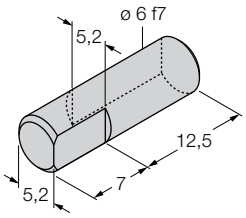

HSA-M6-QR14
Adapter for Ri-QR14 specific positioning elements, hollow on solid shaft, Ø 6 mm

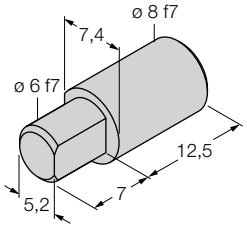

HSA-M8-QR14
Adapter for Ri-QR14 specific positioning elements, hollow on solid shaft, Ø 8 mm

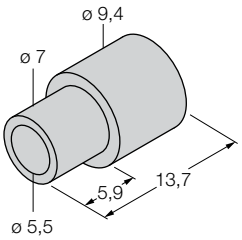

DS-RI-QR14
Spacer sleeves for rear mounting of Ri-QR14, 2 pcs. per pack

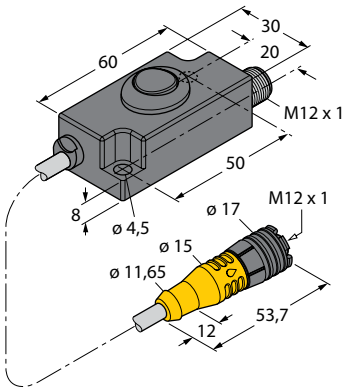

TX1-Q20L60
Teach adapter for inductive linear position and angle sensors

Encoders – Accessories

The product portfolio comprises different mounting aids for hollow and solid shaft encoders, spring elements, stator couplings, flange adapters, mounting brackets and plates.
Measuring wheels for length measurement of moving objects are also available in different qualities and sizes.

Features

- Broad range of flange adapters and mounting elements
- Measuring wheels for length measurement of moving objects

Accessories for encoders

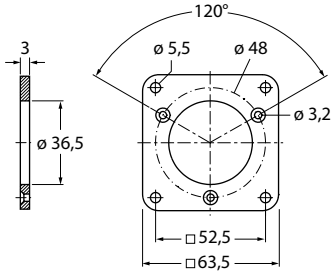

RFA-2
Aluminium flange adapter, rectangular, for solid shaft encoders with clamping flange; edge length 63.5 mm; 3 mm thick

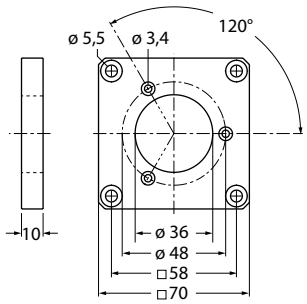

RFA-12
Aluminium flange adapter, rectangular, for solid shaft encoders with clamping flange; edge length 70 mm; 10 mm thick

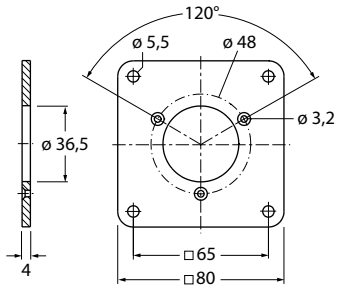

RFA-13
Aluminium flange adapter, rectangular, for solid shaft encoders with clamping flange; edge length 80 mm; 4 mm thick

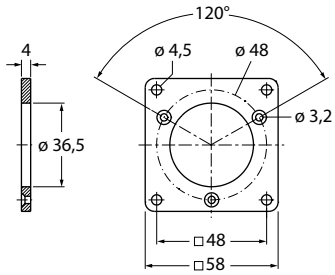

RFA-1
Aluminium flange adapter, rectangular, for solid shaft encoders with clamping flange; edge length 58 mm; 4 mm thick

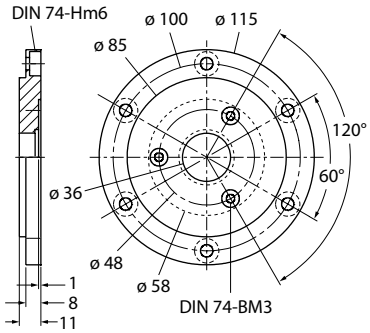

RFA-4
Euro flange – aluminium flange adapter for solid shaft encoders, Ø 115 mm; reference diameter 100 mm; adapts 58 mm clamping flange to Euro flange

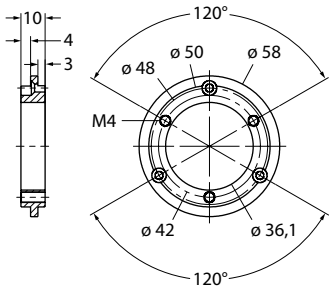

RFA-6
Aluminium flange adapter for solid shaft encoders with clamping flange, Ø 58 mm; adapts clamping flange to synchro flange

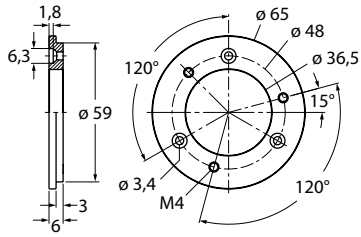

RFA-7
Aluminium flange adapter for solid shaft encoders, Ø 65 mm; adapts to Ø 65 mm flange and 48 mm reference diameter

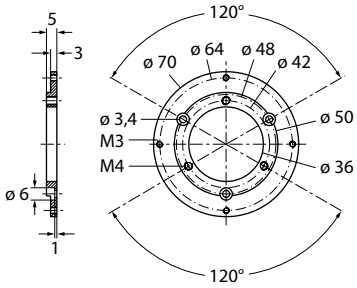

RFA-8
Aluminium flange adapter for solid shaft encoders with clamping flange, Ø 70 mm; thickness 4 mm, adapts to Ø 70 mm flange

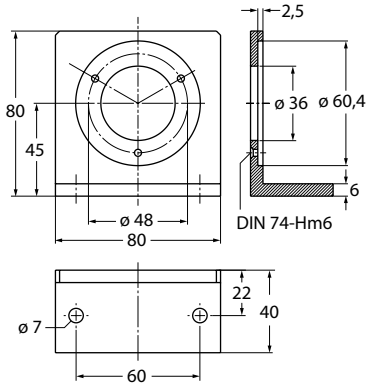

RFA-9
Aluminium angle flange for solid shaft encoders with Ø 58 mm clamping flange

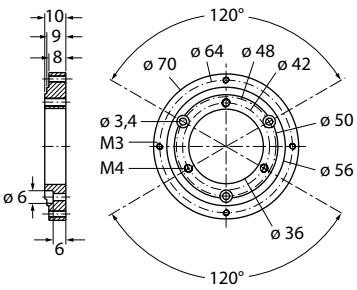

RFA-11
Aluminium flange adapter for solid shaft encoders with clamping flange, Ø 70 mm; thickness 10 mm, adapts to Ø 70 mm flange

Accessories for encoders

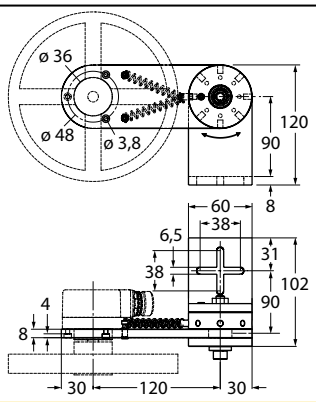

RMW-1
Spring arm for encoders; max. contact pressure 40 N; for encoders with measuring wheel

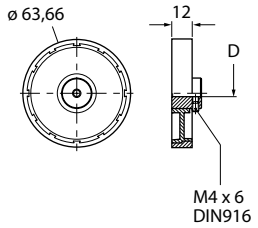

RMW-2
Aluminium measuring wheel (cross-knurled) for encoders, perimeter 0.2m, width 12 mm

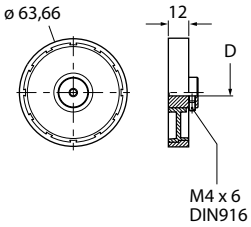

RMW-3
Hytrel measuring wheel (smooth) for encoders, perimeter 0.2 m, width 12 mm, temp.range -10…50°C

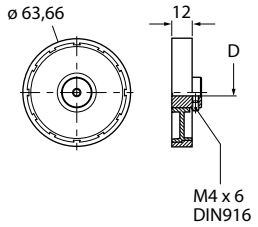

RMW-4
Hytrel measuring wheel (grooved) for encoders, perimeter 0.2 m, width 12 mm, temp.range -10…70°C

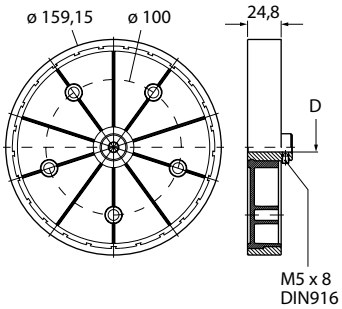

RMW-5
Aluminium measuring wheel (cross-knurled) for encoders, perimeter 0.5 m, width 25 mm

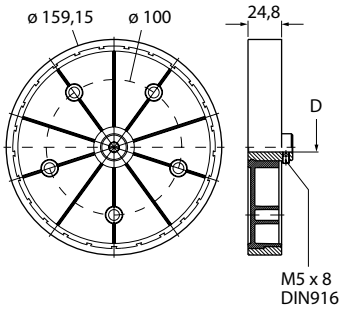

RMW-6
Hytrel measuring wheel (smooth) for encoders, perimeter 0.5m, width 25 mm, temp.range -10…50°C

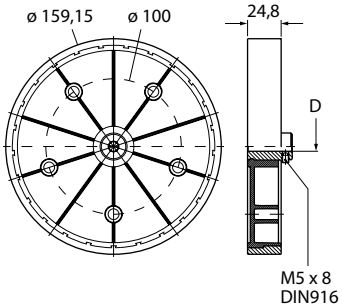

RMW-7
Vulkollan measuring wheel (smooth) for encoders, perimeter 0.5 m, width 25 mm, temp.range -30…80°C

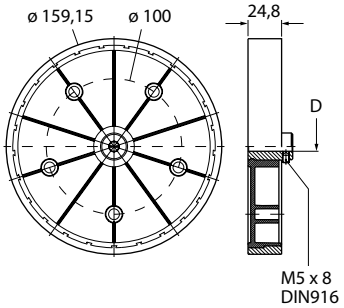

RMW-8
Aluminium measuring wheel with napped rubber for encoders, perimeter 0.5 m, width 25 mm, temp.range -30…80°C

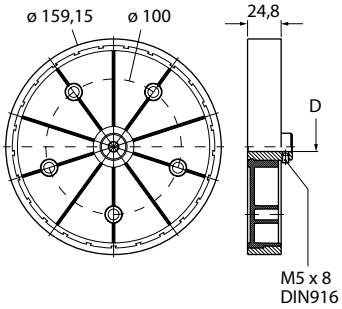

RMW-9
Hytrel measuring wheel (grooved) for encoders, perimeter 0.5m, width 25 mm, temp.range -10…50°C

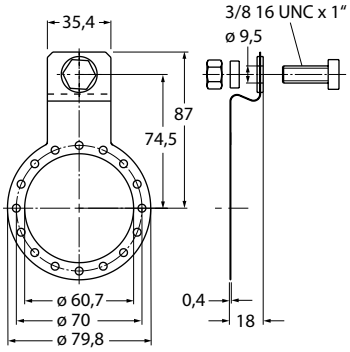

RME-5
Stainless steel mounting plate for hollow shaft encoders, reference diameter 149 mm, for applications with axial play

Accessories for encoders

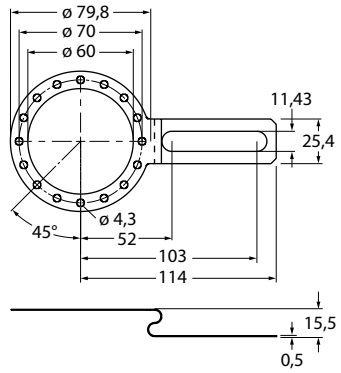

RME-6
Stainless steel mounting plate for hollow shaft encoders, reference diameter 104…206 mm, for applications with fixing points on adjustable reference diameter

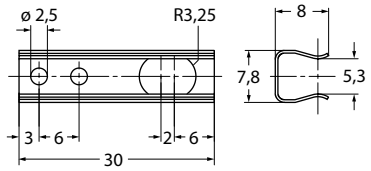

RME-10
Stainless steel spring element for hollow shaft encoders, reference diameter 110 mm, for applications with high axial play

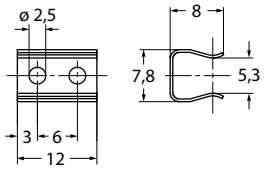

RME-11
Stainless steel spring element for hollow shaft encoders, reference diameter 76 mm, for applications with limited mounting space

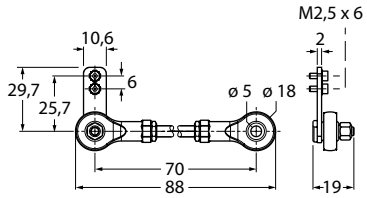

RME-15
Metal arm bracket, for hollow shaft encoders, length 70 mm; for applications with little axial and radial play; flexibly adjustable

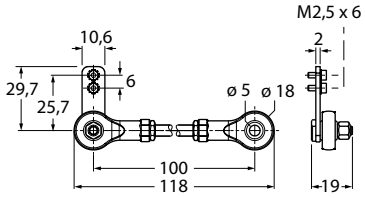

RME-16
Metal arm bracket, for hollow shaft encoders, length 100 mm; for applications with little axial and radial play; flexibly adjustable

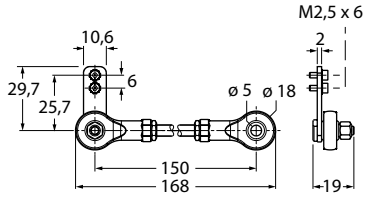

RME-17
Metal arm bracket, for hollow shaft encoders, length 150 mm; for applications with little axial and radial play; flexibly adjustable

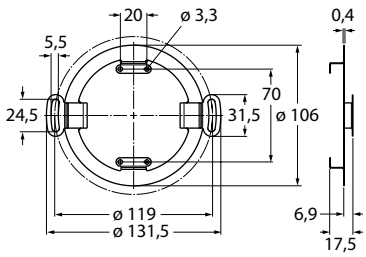

RME-18
Stainless steel stator coupling for hollow shaft encoders, reference diameter 119 mm, for highly dynamic applications with axial and radial play

Pressure sensors – Accessories

We offer matching accessories for mounting and protection of pressure sensors. Available are accessories for the PK series as well as protective aids for the PS series. It also includes a heat sink to reduce high ambient temperatures.

Features

- Protective cap for the PS series
- Reduction of temperature for the PS and PT series
- Mounting accessories for the PK series

Accessories for PS series

PTS-Cover
Protective cap

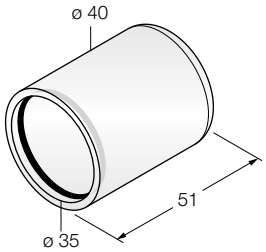

PCS-G1/4A4
Cooling section

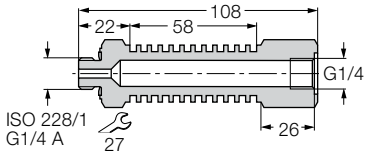

PCV-G1/4A4
Adapter G1/4" on G1/4" thread

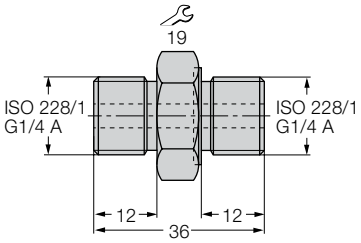

PCV-G1/2A4
Adapter G1/4" on G1/2" thread

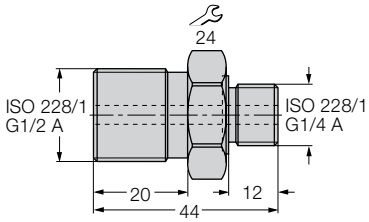

PCV-N1/2A4
Adapter G1/4" on N1/2" thread

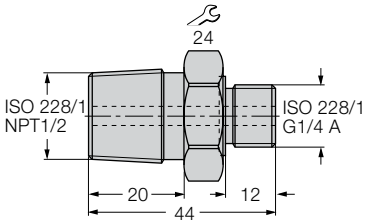

PCV-G1/8A4
Adapter G1/4" on G1/8" thread

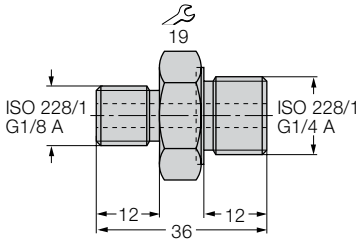

Accessories for PT series

PCS-G1/4A4
Cooling section

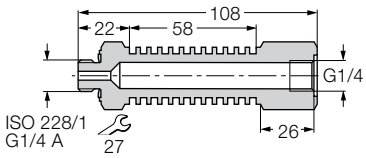

Accessories for the PK series

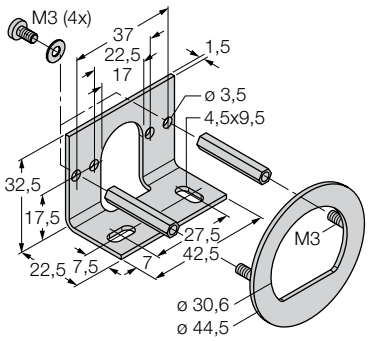

PK-N-MZ-001
complete mounting kit PK-N

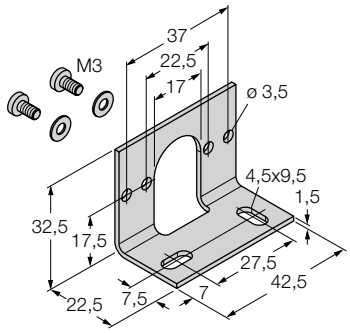

PK-N-MZ-002
Mounting bracket PK-N

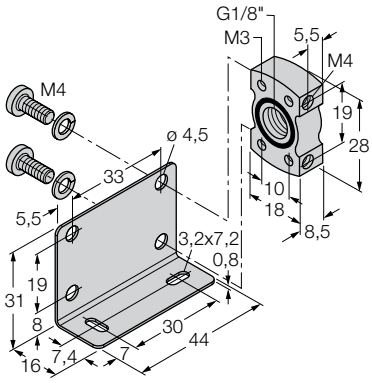

PK-P-MZ-001
Mounting kit PK-P

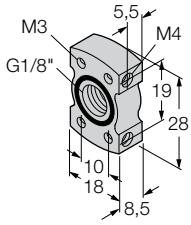

PK-P-MZ-002
Flange connection PK-P

Temperature sensors – Accessories

We offer accessories for operating, mounting and protection of sensors. The product portfolio comprises function and mounting accessories such as compression and cutting ring fittings as well as thermowells and protective caps. The protection accessories are made to measure and thus protect optimally against mechanical damages.

Features

- Compression fittings for temperature probes with different process connections
- Thermowells

THW-3 – Thermowell for 3 mm probes

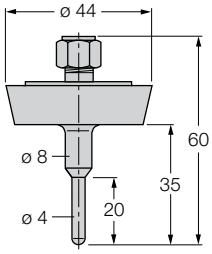

THW-3-DN25K-L035
Thermowell for mounting temperature probes

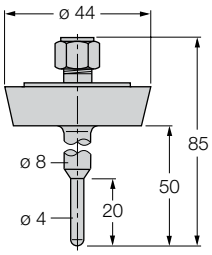

THW-3-DN25K-A4-L050
Thermowell for mounting temperature probes

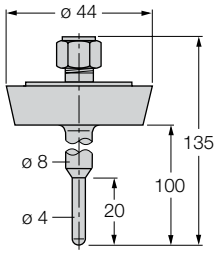

THW-3-DN25K-A4-L100
Thermowell for mounting temperature probes

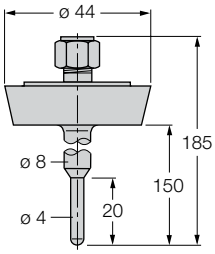

THW-3-DN25K-A4-L150
Thermowell for mounting temperature probes

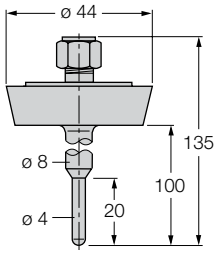

THW-3-DN25K-A4-L250
Thermowell for mounting temperature probes

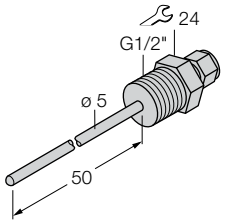

THW-3-G1/2-A4-L050
Thermowell for mounting temperature probes

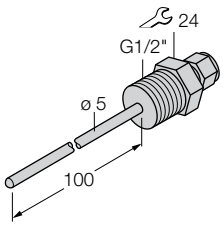

THW-3-G1/2-A4-L100
Thermowell for mounting temperature probes

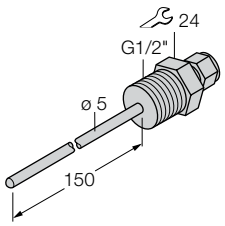

THW-3-G1/2-A4-L150
Thermowell for mounting temperature probes

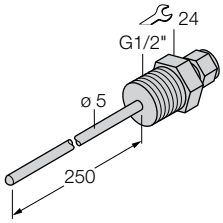

THW-3-G1/2-A4-L250
Thermowell for mounting temperature probes

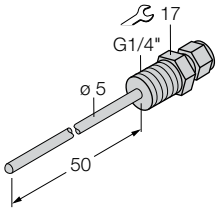

THW-3-G1/4-A4-L050
Thermowell for mounting temperature probes

THW-3 – Thermowell for 3 mm probes

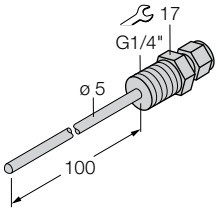

THW-3-G1/4-A4-L100
Thermowell for mounting temperature probes

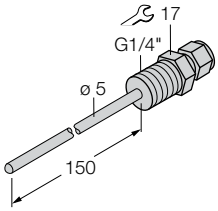

THW-3-G1/4-A4-L150
Thermowell for mounting temperature probes

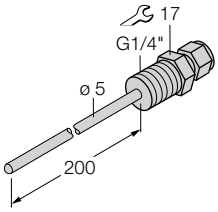

THW-3-G1/4-A4-L200
Thermowell for mounting temperature probes

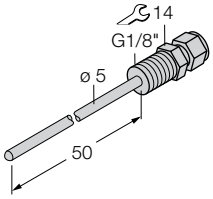

THW-3-G1/8-A4-L050
Thermowell for mounting temperature probes

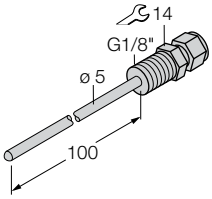

THW-3-G1/8-A4-L100
Thermowell for mounting temperature probes

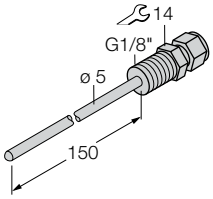

THW-3-G1/8-A4-L150
Thermowell for mounting temperature probes

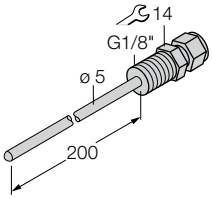

THW-3-G1/8-A4-L200
Thermowell for mounting temperature probes

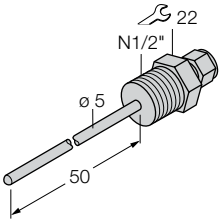

THW-3-N1/2-A4-L050
Thermowell for mounting temperature probes

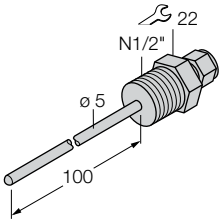

THW-3-N1/2-A4-L100
Thermowell for mounting temperature probes

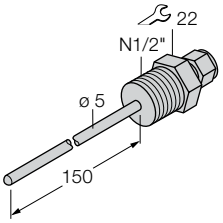

THW-3-N1/2-A4-L150
Thermowell for mounting temperature probes

THW-3 – Thermowell for 3 mm probes

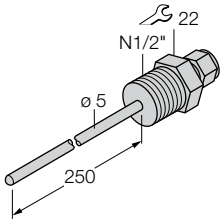

THW-3-N1/2-A4-L250
Thermowell for mounting temperature probes

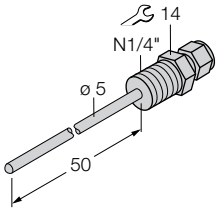

THW-3-N1/4-A4-L050
Thermowell for mounting temperature probes

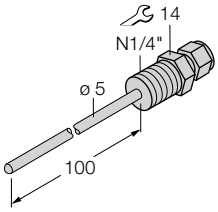

THW-3-N1/4-A4-L100
Thermowell for mounting temperature probes

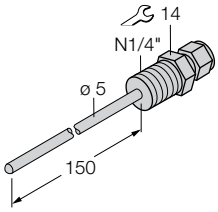

THW-3-N1/4-A4-L150
Thermowell for mounting temperature probes

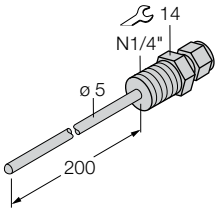

THW-3-N1/4-A4-L200
Thermowell for mounting temperature probes

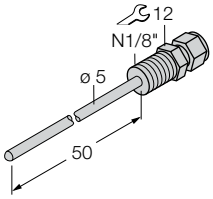

THW-3-N1/8-A4-L050
Thermowell for mounting temperature probes

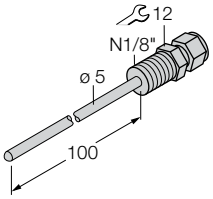

THW-3-N1/8-A4-L100
Thermowell for mounting temperature probes

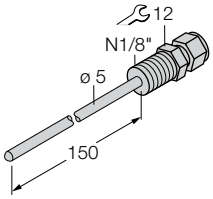

THW-3-N1/8-A4-L150
Thermowell for mounting temperature probes

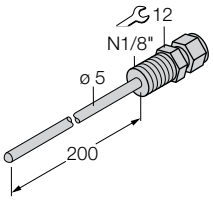

THW-3-N1/8-A4-L200
Thermowell for mounting temperature probes

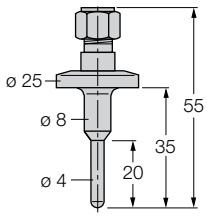

THW-3-TRI3/4-A4-L035
Thermowell for mounting temperature probes

THW-3 – Thermowell for 3 mm probes

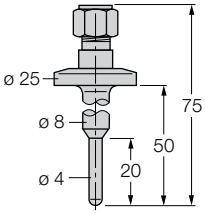

THW-3-TRI3/4-A4-L050
Thermowell for mounting temperature probes

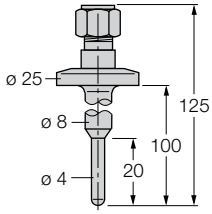

THW-3-TRI3/4-A4-L100
Thermowell for mounting temperature probes

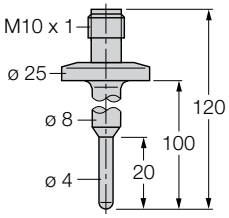

THW-3-TRI3/4-A4-L100
Thermowell for mounting temperature probes

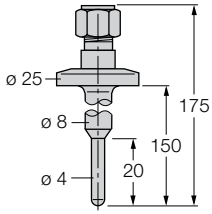

THW-3-TRI3/4-A4-L150
Thermowell for mounting temperature probes

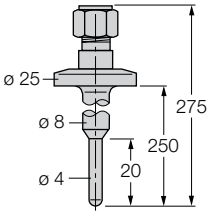

THW-3-TRI3/4-A4-L250
Thermowell for mounting temperature probes

THW-6 – Thermowell for 6 mm probes

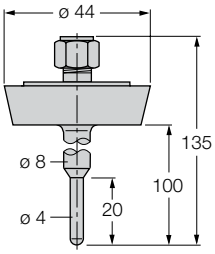

THW-6-DN25K-A4-L100
Thermowell for mounting temperature probes

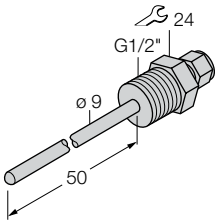

THW-6-G1/2-A4-L050
Thermowell for mounting temperature probes

THW-6 – Thermowell for 6 mm probes

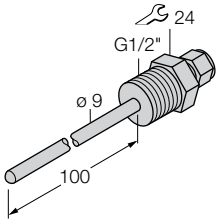

THW-6-G1/2-A4-L100
Thermowell for mounting temperature probes

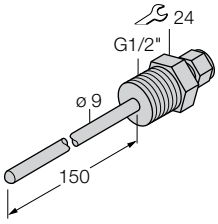

THW-6-G1/2-A4-L150
Thermowell for mounting temperature probes

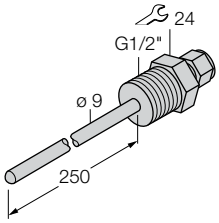

THW-6-G1/2-A4-L250
Thermowell for mounting temperature probes

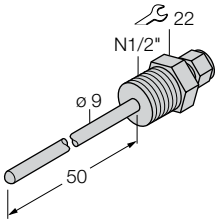

THW-6-N1/2-A4-L050
Thermowell for mounting temperature probes

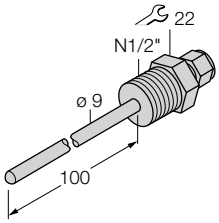

THW-6-N1/2-A4-L100
Thermowell for mounting temperature probes

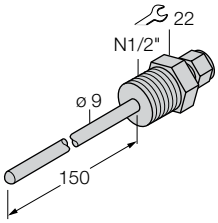

THW-6-N1/2-A4-L150
Thermowell for mounting temperature probes

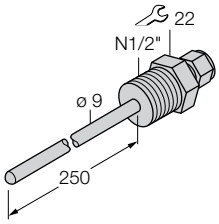

THW-6-N1/2-A4-L250
Thermowell for mounting temperature probes

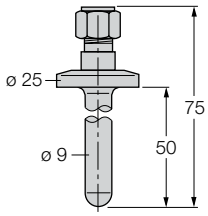

THW-6-TRI3/4-A4-L050
Thermowell for mounting temperature probes

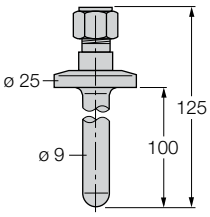

THW-6-TRI3/4-A4-L100
Thermowell for mounting temperature probes

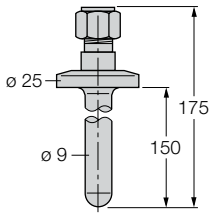

THW-6-TRI3/4-A4-L150
Thermowell for mounting temperature probes

THW-6 – Thermowell for 6 mm probes

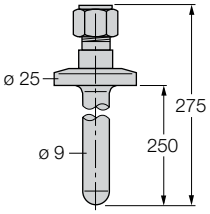

THW-6-TRI3/4-A4-L250
Thermowell for mounting temperature probes

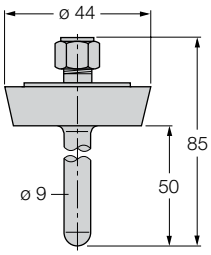

THW-6-DN25K-A4-L050
Thermowell for mounting temperature probes

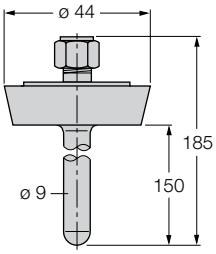

THW-6-DN25K-A4-L150
Thermowell for mounting temperature probes

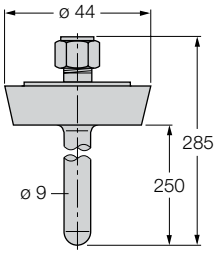

THW-6-DN25K-A4-L250
Thermowell for mounting temperature probes

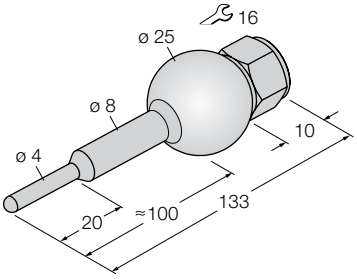

THW-3-UNI25-A4-L100
Thermowell for mounting temperature probes

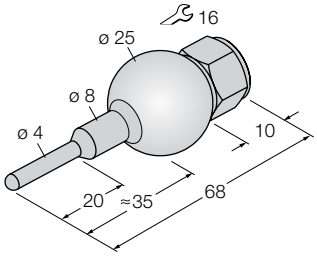

THW-3-UNI25-A4-L035
Thermowell for mounting temperature probes

CF-3 – Compression fittings for 3 mm probes

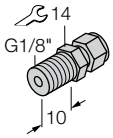

CF-M-3-G1/8-A4
Compression ferrule fittings for direct mounting of temperature probes

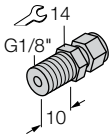

CF-M-3-N1/8-A4
Compression ferrule fittings for direct mounting of temperature probes

CF-3 – Compression fittings for 3 mm probes

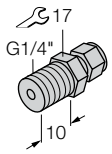

CF-M-3-G1/4-A4
Compression ferrule fittings for direct mounting of temperature probes

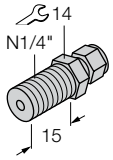

CF-M-3-N1/4-A4
Compression ferrule fittings for direct mounting of temperature probes

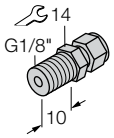

CF-P-3-G1/8-A4
Compression ferrule fittings for direct mounting of temperature probes

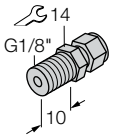

CF-P-3-N1/8-A4
Compression ferrule fittings for direct mounting of temperature probes

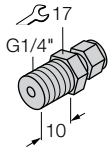

CF-P-3-G1/4-A4
Compression ferrule fittings for direct mounting of temperature probes

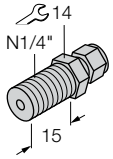

CF-P-3-N1/4-A4
Compression ferrule fittings for direct mounting of temperature probes

CF-6 – Compression fittings for 6 mm probes

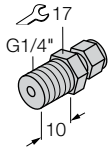

CF-M-6-G1/4-A4
Compression ferrule fittings for direct mounting of temperature probes

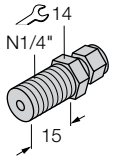

CF-M-6-N1/4-A4
Compression ferrule fittings for direct mounting of temperature probes

CF-6 – Compression fittings for 6 mm probes

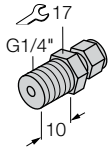

CF-P-6-G1/4-A4
Compression ferrule fittings for direct mounting of temperature probes

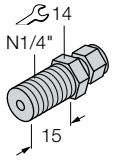

CF-P-6-N1/4-A4
Compression ferrule fittings for direct mounting of temperature probes

Other accessories

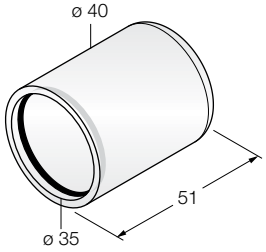

PTS-Cover
Protective cap

Flow sensors/meters – Accessories

We offer accessories for operating, mounting and protection of sensors. Function supporting accessories, actuating elements, accessories for easy and secure mounting as well as aids, shielding against mechanical load.

Features

- Adapter for flow meters
- D18, D15, D10 on G1/2
- Other connection types on request
- Mounting aids for FTCI, FCVI and FCMI flow meters

Adapters and mounting kits

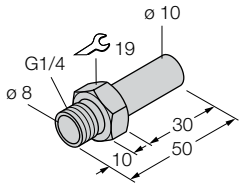

FTCI-G1/4A4-D10/L050
Adapter for G1/4 thread made of stainless steel A4 (1.4571/AISI 316Ti)

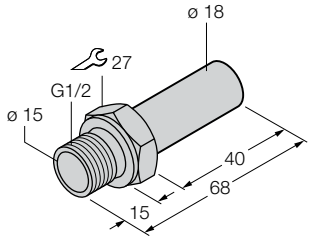

FTCI-G1/2A4-D18/L068
Adapter for G1/2 thread made of stainless steel A4 (1.4571/AISI 316Ti)

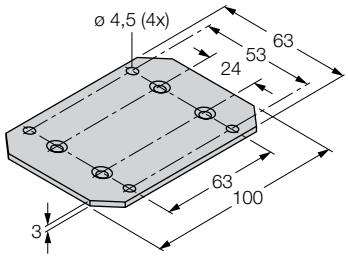

FTCI-MP01AL
aluminium mounting panel for front mounting

Reflectors

The use of reflectors and reflective foils requires sufficient excess gain (excess radiated power).
„Excess gain 1“ means, the sensor operates without excess of radiancy. If dust, fume or mist is expected to contaminate the lens or the beam path, the excess gain of the system has to be enlarged (> 1.5) compared to a clean environment (1.5).
Unless otherwise indicated, the ranges of the retroreflective sensors stated here are based on the use of a BRT-3 reflector with a diameter of 75 mm.

Features

- Reflectors and reflective foils are available in different sizes and with different mounting arrangements
- Reflectors for rough environments and high temperatures

Rectangular reflectors

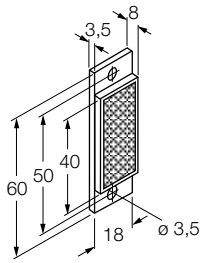

BRT-40X18A
Rectangular reflector, reflection coefficient 1.0, material acrylic, ambient temperature -20 … +60 °C

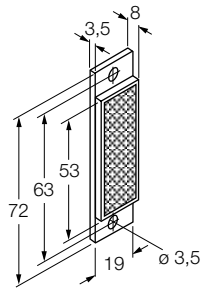

BRT-53X19A
Rectangular reflector, reflection coefficient 1.4, material acrylic, ambient temperature -20 … +60 °C

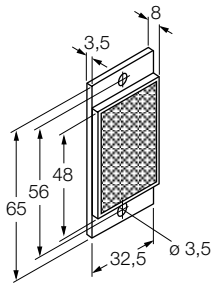

BRT-48X32A
Rectangular reflector, reflection coefficient 1.0, material acrylic, ambient temperature -20 … +60 °C

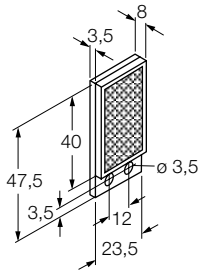

BRT-40X23B
Rectangular reflector, reflection coefficient 1.4, material acrylic, ambient temperature -20 … +60 °C

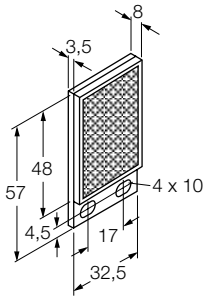

BRT-48X32B
Rectangular reflector, reflection coefficient 1.0, material acrylic, ambient temperature -20 … +60 °C

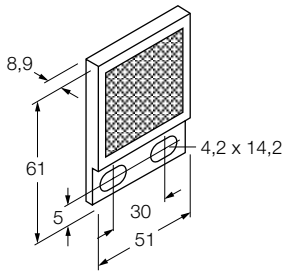

BRT-46
Rectangular reflector, reflection coefficient 1.8, material acrylic, ambient temperature max. 50 °C

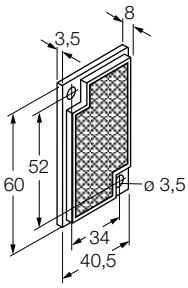

BRT-60X40C
Rectangular reflector, reflection coefficient 1.48, material: acrylic, ambient temperature -20…+60 °C

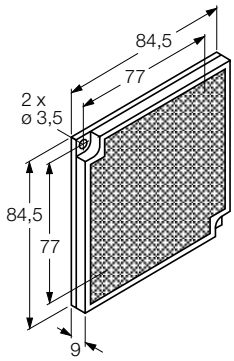

BRT-77X77C
Round reflector, reflection coefficient 2.0, material acrylic, ambient temperature -20 … +60 °C

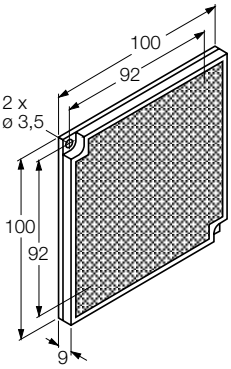

BRT-92X92C
Round reflector, reflection coefficient 3.0, material acrylic, ambient temperature -20 … +60 °C

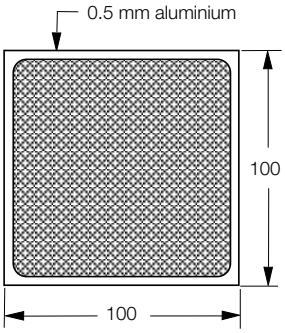

BRT-4HT
Rectangular reflector, reflection coefficient 0.15, material aluminium, ambient temperature max. 480 °C

Rectangular reflectors

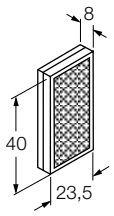

BRT-40X23
Rectangular reflector, reflection coefficient 1.4, material acrylic, ambient temperature -20 … +60 °C

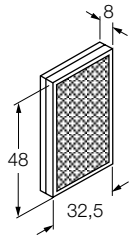

BRT-48X32
Rectangular reflector, reflection coefficient 1.0, material acrylic, ambient temperature -20 … +60 °C

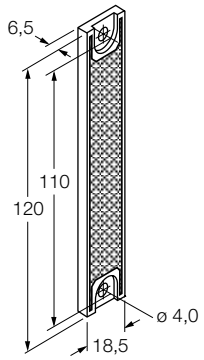

BRT-100X18A
Rectangular reflector, reflection coefficient 1.4, material acrylic, ambient temperature -20 … +60 °C

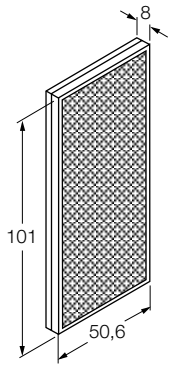

BRT-100X50
Rectangular reflector, reflection coefficient 1.4, material acrylic, ambient temperature -20 … +60 °C

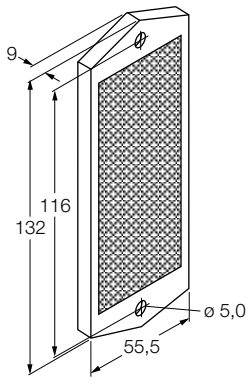

BRT-100X55A
Rectangular reflector, reflection coefficient 1.5, material acrylic, ambient temperature -20 … +60 °C

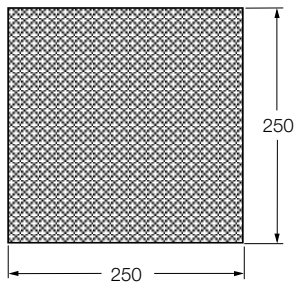

BRT-250
Special rectangular reflector for LT7PLVQ sensor, material aluminium, ambient temperature -20 … +50 °C

Round reflectors

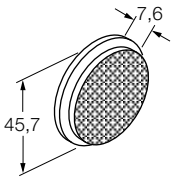

BRT-40
Round reflector, reflection coefficient 1.0, material acrylic, ambient temperature max. 65 °C

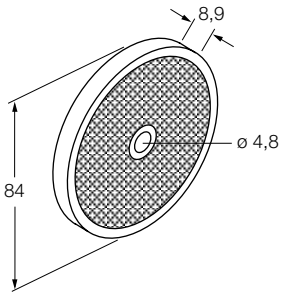

BRT-75
Round reflector, reflection coefficient 1.0, material acrylic, ambient temperature max. 65 °C

Round reflectors

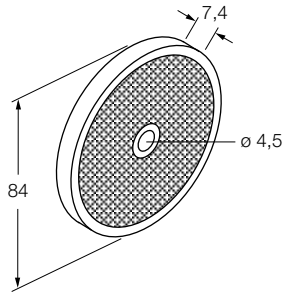

BRT-84
Round reflector, reflection coefficient 1.4, material acrylic, ambient temperature -20 … +60 °C

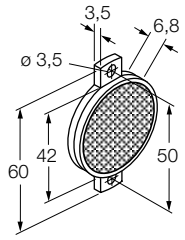

BRT-42A
Rectangular reflector, reflection coefficient 1.0, material acrylic, ambient temperature -20 … +60 °C

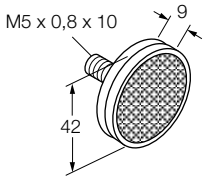

BRT-42D
Round reflector, reflection coefficient 1.0, material acrylic, ambient temperature -20 … +60 °C

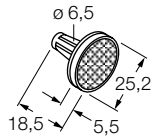

BRT-25R
Round reflector, reflection coefficient 1.0, material acrylic, ambient temperature -20 … +60 °C

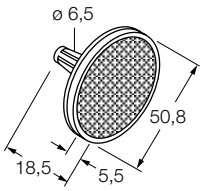

BRT-50R
Round reflector, reflection coefficient 1.0, material acrylic, ambient temperature max. 50 °C

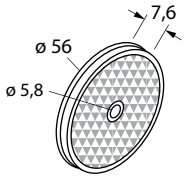

BRT-2A
Round reflector, reflection coefficient 1.0, material acrylic, ambient temperature max. 65 °C

Reflective foil

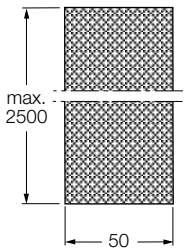

BRF50H (1M)
self-adhesive reflective foil made of epoxy resin. Length 1 m, reflection coefficient 0.7, max. ambient temperature 60 °C

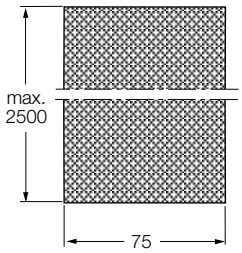

BRF75H (1M)
self-adhesive reflective foil made of epoxy resin. Length 1 m, reflection coefficient 0.7, max. ambient temperature 60 °C

Plastic fibers

The very flexible plastic fibers are a well-priced solution for applications with poorly accessible spaces.
Plastic fibers can be cut to the required length. They are freely bendable and fit everywhere. For applications in which the fibers need to be bended in all directions, TURCK offers extremely flexible coiled version with the following diameters: 0.25, 0.5, 0.75, 1 and 1.5 mm. They are sold in pairs.

Features

- Well-priced solution for confined spaces
- Easy fitting
- Coiled plastic fibers, freely bendable
- Highly flexible
- Cut to fit
- Extremely small bending radius, more than 1,000,000 bending cycles
- Ambient temperatures: -30…+70 °C
- Auxiliary lenses to increase the sensing range and to focus the light
- Quartz glass tips – Monitoring of filling levels
- Brackets available as accessories

Type code plastic fibers

P	B	P	4	6	UC	MXX

P plastic fiber

plastic fiber

P	plastic fiber

B Design/Operating mode

Design/Operating mode

B	bifurcated fiber diffuse mode
I	individual fiber opposed mode (2 fibers required)

P Sensing end

Sensing end

A	angled (90°)
AT	angled (90°), thread
AF	angled (90°), ferrule
AP	angled (90°), probe
CF	coaxial, ferrule
CT	coaxial, thread
EFP	extended ferrule, probe
F	ferrule
FM	ferrule, miniature
FMP	ferrule, miniature, probe
FP	ferrule, probe
L	lensed
P	bendable probe
PF	probe, ferrule
PM	probe, miniature
PMSB	probe, miniature, side emission bendable
PS	probe, side emission
PSB	probe, side emission, bendable
PSM	probe, side emission, miniature
R	rectangular beam
RS	rectangular beam, side emission
T	thread
TA	thread, angled (90°)
TF	thread, ferrule
TR	thread, rectangular
U	unterminated fiber

4 Bundle diameter (core)

Bundle diameter (core)

1X4	4 x 0.25 mm
1X8	8 x 0.25 mm
1X16	16 x 0.25 mm
1X32	32 x 0.25 mm
1	0.25 mm
2	0.5 mm
3	0.75 mm
4	1 mm
6	1.5 mm

6 Total length

Total length

3	3 ft. = approx. 914 mm
6	6 ft. = approx. 1829 mm
15	15 ft. = approx. 4572 mm

UC Connecting end to the sensor

Connecting end to the sensor

T	pluggable termination (for sensor type D12)
T1	pluggable termination (for sensor type Q45)
TS	pluggable termination, stainless steel (for sensor type D12)
TS1	pluggable termination stainless steel (for sensor type Q45)
U*	unterminated, customizable
UC*	unterminated coiled fiber customizable
UHF	unterminated DURO-BEND™ multi-core fiber
UHT	unterminated, high-temperature fiber 125 °C

MXX Modifiaction of sensing end

Modifiaction of sensing end

MXX	modifiaction of sensing end

* Plastic fibers featuring a "U" in the type code are unterminated and can be cut to the required length with the supplied cutter.
All individual plastic fibers are sold in pairs.

Plastic fibers – Bifurcated fibers

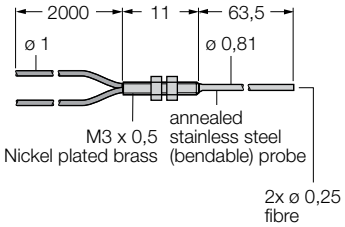

PBP16U
Plastic fiber, sensing mode: Diffuse mode, bendable tip, preassembled wire without end tip, polyethylene jacket, ambient temperatures -30…+70 °C

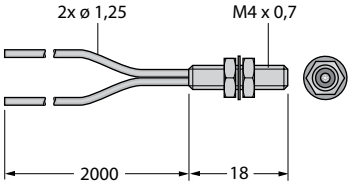

PBCT26U
Plastic fiber, sensing mode: Diffuse mode, coaxial, threaded bush M4 x 0.7 mm, preassembled wire without end tip, polyethylene jacket, ambient temperatures -30…+70 °C

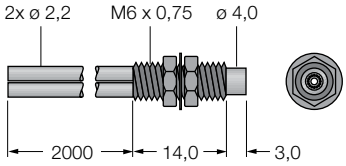

PBCT46U
Plastic fiber, sensing mode: Diffuse mode, coaxial, threaded bush M6 x 0.75 mm, preassembled wire without end tip, polyethylene jacket, ambient temperatures -30…+70 °C

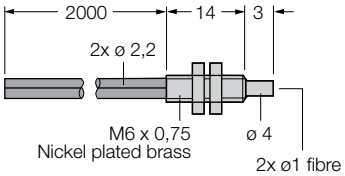

PBT46UHF
Plastic fiber, sensing mode: Diffuse mode, threaded bush M6 x 0.75 mm, highly bendable DURA-BEND™ multicore fiber, preassembled wire without end tip, polyethylene jacket, ambient temperatures -30…+70 °C

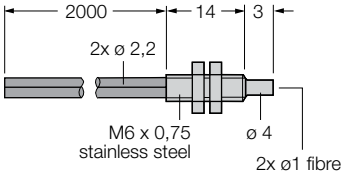

PBT46UHT1
Plastic fiber, sensing mode: Diffuse mode, threaded bush M6 x 0.75 mm, preassembled wire without end tip, polyethylene jacket, ambient temperatures up to +125 °C

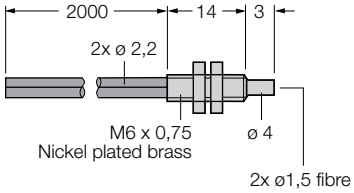

PBT66U
Plastic fiber, sensing mode: Diffuse mode, threaded bush M6 x 0.75 mm, preassembled wire without end tip, polyethylene jacket, ambient temperatures -30…+70 °C

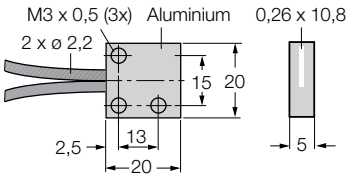

PBR1X326U
Plastic fiber, sensing mode: Diffuse mode, rectangular beam, preassembled wire without end tip, polyethylene jacket, ambient temperatures -30…+70 °C

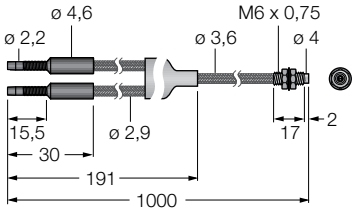

PBT43TMB5
Plastic fiber, sensing mode: Diffuse mode, threaded bush M6 x 0.75 mm, pluggable end tip (for D12 sensor), polyethylene jacket, ambient temperatures -30…+70 °C

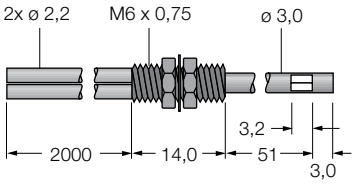

PBPS46UMT
Plastic fiber, sensing mode: Diffuse mode, lateral beam, head with bendable tip, threaded bush M6 x 0.75 mm, preassembled wire without end tip, polyethylene jacket, ambient temperatures -30…+70 °C

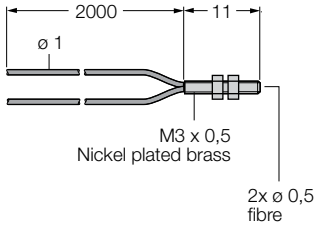

PBT26U
Plastic fiber, sensing mode: Diffuse mode, threaded bush M3 x 0.75 mm, preassembled wire without end tip, polyethylene jacket, ambient temperatures -30…+70 °C

Plastic fibers – Bifurcated fibers

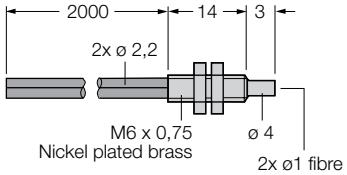

PBT46U
plastic fibre-optic sensor, sensing mode: diffuse mode sensor, polyethylene cable; for ambient temperatures of -30…+70 °C

Plastic fibers – Individual fibers

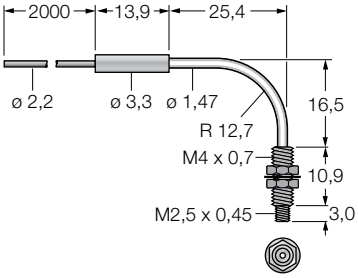

PIAT46U
Plastic fiber, sensing mode: Opposed mode, head angled (90°), threaded bush M2.5 x 0.45, preassembled wire without end tip, polyethylene jacket, ambient temperatures -30…+70 °C

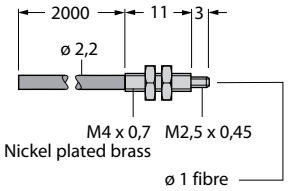

PIT46UHF
Plastic fiber, sensing mode: Opposed mode, threaded bush M2.5 x 0.45 mm, highly bendable DURA-BEND™ multicore fiber, preassembled wire without end tip, polyethylene jacket, ambient temperatures -30…+70 °C

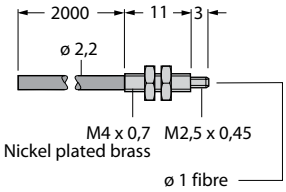

PIT46UHT1
Plastic fiber, sensing mode: Opposed mode, threaded bush M2.5 x 0.45 mm, preassembled wire without end tip, polyethylene jacket, ambient temperatures up to +125 °C

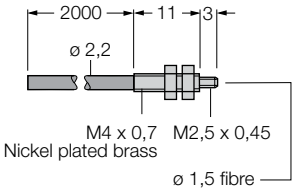

PIT66U
Plastic fiber, sensing mode: Opposed mode, bundle diameter Ø 1,5 mm, threaded bush M2,5 x 0.45, preassembled wire without end tip, polyethylene jacket, ambient temperatures -30…+70 °C

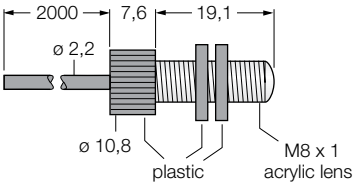

PIL46U
Plastic fiber, sensing mode: Opposed mode, with acrylic lens, threaded bush M8 x 1, preassembled wire without end tip, polyethylene jacket, ambient temperatures -30…+70 °C

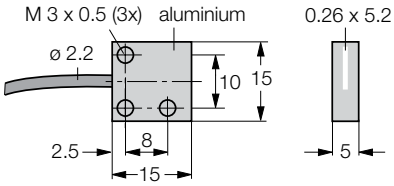

PIR1X166U
Plastic fiber, sensing mode: Opposed mode, compact head, rectangular/straight beam, preassembled wire without end tip, polyethylene jacket, ambient temperatures -30…+70 °C

Plastic fibers – Individual fibers

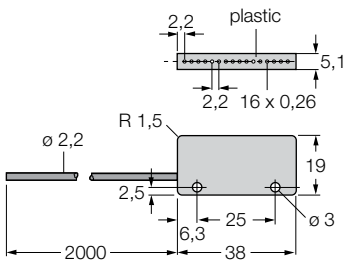

PIRS1X166UMPMAL
Plastic fiber, sensing mode: Opposed mode, rectangular beam, side emission, preassembled wire without end tip, polyethylene jacket, ambient temperatures -30…+70 °C

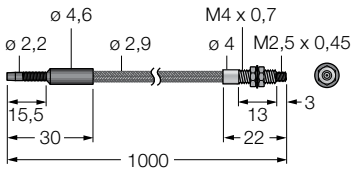

PIT43TMB5
Plastic fiber, sensing mode: Opposed mode, threaded bush M2.5 x 0.45 mm, pluggable end tip (for D12 sensor), polyethylene jacket, ambient temperatures -30…+70 °C

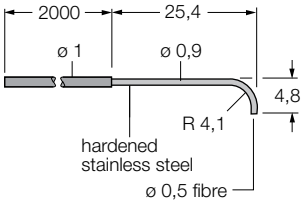

PIA26U
Plastic fiber, sensing mode: Opposed mode, head angled (90°), polyethylene jacket, ambient temperatures -30…+70 °C

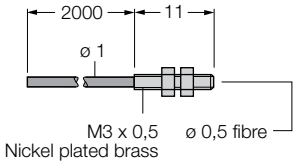

PIT26U
Plastic fiber, sensing mode: Opposed mode, threaded bush M3 x 0.5 mm, preassembled wire without end tip, polyethylene jacket, ambient temperatures -30…+70 °C

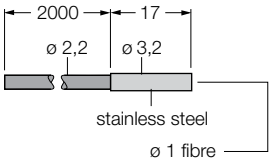

PIF46U
Plastic fiber, sensing mode: Opposed mode, smooth bush Ø 3.2, preassembled wire without end tip, polyethylene jacket, ambient temperatures -30…+70 °C

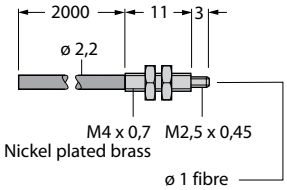

PIT46U
plastic fibre-optic sensor, sensing mode: light screen, polyethylene cable; for ambient temperatures of -30…+70 °C

Plastic fibers – Lenses

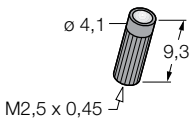

L2
Glass lens in nickel-plated brass jacket, for range extension of plastic fiber optic sensors, ambient temperatures -60 …+350 °C

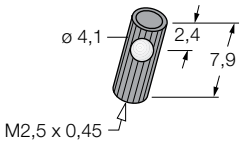

L2RA
Glass lens (prism) in nickel-plated brass jacket, lateral beam emissiono, for range extension of plastic fiber optic sensors, ambient temperatures -60 …+300 °C

Plastic fibers – Lenses

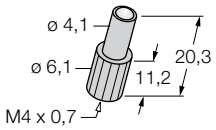

L4C6
Accessory lens in anodized aluminium jacket to focus the light of plastic fiber optic sensors, range 6 mm ± 1 mm, spot size Ø 2.5 mm, ambient temperatures -40 …+70 °C

Plastic fibers – Level sensing tips

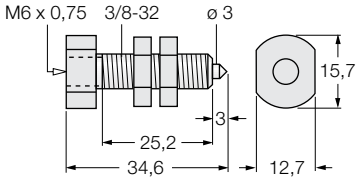

TGR3/8MPFMQ
Monitoring of filling levels with bifurcated plastic fiber PBT46U and PBT26UM6M.1, polypropylene jacket, quartz glass tip, ambient temperatures of -30…+70 °C.

Glass fibers

In many applications objects can only be detected with the help of fiber optics. If light beams have to be piped through very hot, humid or chemically aggressive ambients, glass or plastic fibers are the ideal solution.
Glass fibers are available in different sizes, lengths and qualities, as monofilaments for opposed mode sensors and as bifurcated or double bifurcated fibers for diffuse mode sensors.
Unlike plastic fibers, glass fibers have a bigger inner bending radius and are not suited for frequent bending.

Features

- Standard and special versions for demanding application conditions
- High chemical resistance
- Broad temperature range: -140…+480 °C
- Immune to moisture
- Resistant to impacts and vibration
- High interference immunity
- Robust design for application in vacuum chambers
- Auxiliary lenses to increase the sensing range and to focus the light
- Quartz glass tips – Monitoring of filling levels
- Brackets available as accessories

Type code glass fibers

I	AT	2	3	S	MXXX

I Design

Design

B	bifurcated fiber diffuse mode
DB	Double bifurcated fiber emitter and receiver to two sensing points
I	individual fiber opposed mode (2 fibers required)

AT Sensing end

Sensing end

A	angled (90°)
AM	angled (90°), miniature tip Ø 1.5 mm
AMM	angled (90°), miniature tip Ø 1.1 mm
AR	angled (90°), rectangular beam
AT	angled (90°), thread
ATR	angled (90°), thread rectangular beam
F	ferrule
FR	ferrule, rectangular beam
HA	half angle (45°)
HAR	half angle (45°) rectangular beam
HAT	half angle (45°), thread, brass
HATR	half angle (45°), thread rectangular beam
M	miniature tip, Ø 1.5 mm
MAP	miniature tip, Ø 1.5 mm angled (90°)
MHAP	miniature tip, Ø 1.5 mm, half angled (45°)
MM	miniature tip, Ø 1.1 mm
MT	miniature tip, Ø 1.5 mm brass thread
MTAP	miniature tip, Ø 1.5 mm brass thread, angled (90°)
MT-HAP	miniature tip, Ø 1.5 mm brass thread, half angle (45°)
MTP	miniature tip, Ø 1.5 mm brass thread
P	bendable tip Ø 2.3 mm
R	rectangular beam
T	brass thread
TA	thread, angled (90°)
TAR	thread, rectangular beam
THA	thread, half angle (45°)
THAR	thread, half angle (45°) rectangular beam
TR	thread, rectangular beam

2 Bundle diameter (core)

Bundle diameter (core)

.44	0.7 mm
.5	0.8 mm
.75	1.2 mm
1	1.6 mm
1.5	2.3 mm
2	3.2 mm
2.5	4.0 mm

3 Total length

Total length

3	3 ft. = approx. 914 mm
6	6 ft. = approx. 1829 mm

S Sheath material

Sheath material

S	stainless steel, flexible conduit
P	galvanized spiral sheath with PVC
L	silicone sheath (max. flexibility, min. protection of fiber)
T	PTFE sheath (max. chemical resistance, min. flexibility)
HDP	silicone sheath (max. flexibility, min. protection of fiber)

MXXX Modifiaction of sensing end

Modifiaction of sensing end

M600	heat-resistant up to 315 °C
M900	heat-resistant up to 480 °C

Glass fibers – Bifurcated fibers

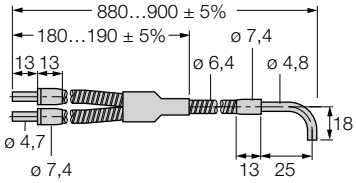

BA23S
Glass fiber, sensing mode: Diffuse mode, head angled (90°), flexible stainless steel sheath, ambient temperatures
-140…+250 °C

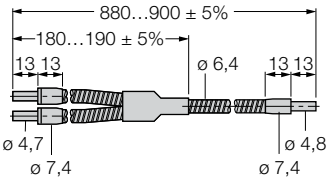

BF23S
Glass fiber, sensing mode: Diffuse mode, flexible stainless steel sheath, ambient temperatures
-140…+250 °C

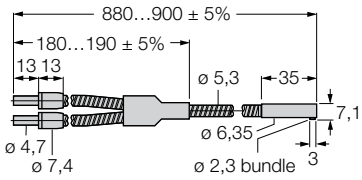

BA1.53SMTA
Glass fiber, sensing mode: Diffuse mode, compact head (ø 1.5 mm), head angled (90°), flexible stainless steel sheath, ambient temperatures
-140…+250 °C

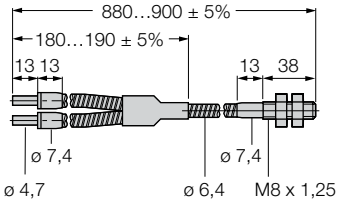

BT23SM8
Glass fiber, sensing mode: Diffuse mode, threaded bush (brass) M8 x 1.25, bundle diameter 3.2 mm, flexible stainless steel sheath, ambient temperatures
-140…+250 °C

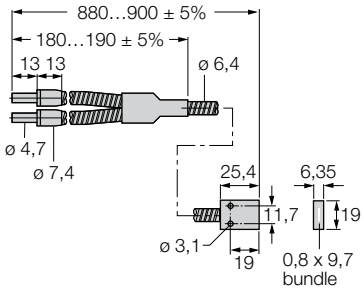

BR23S
Glass fiber, sensing mode: Diffuse mode, rectangular beam, flexible stainless steel sheath, ambient temperatures
-140…+250 °C

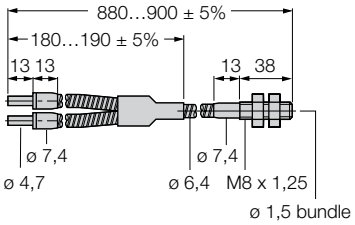

BT13SM8
Glass fiber, sensing mode: Diffuse mode, threaded bush (brass) M8 x 1.25, bundle diameter 1,6 mm, flexible stainless steel sheath, ambient temperatures
-140…+250 °C

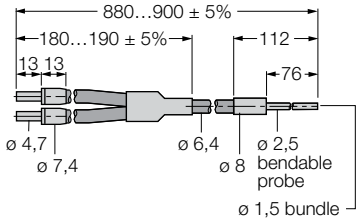

BP13P
Glass fiber, sensing mode: Diffuse mode sensor, bendable tip, galvanized PVC jacket, ambient temperatures
-140 °C…+250 °C

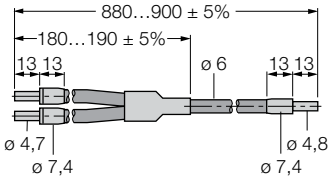

BF23P
Glass fiber, sensing mode: Diffuse mode sensor, galvanized PVC jacket; for ambient temperatures of
-40…+105 °C

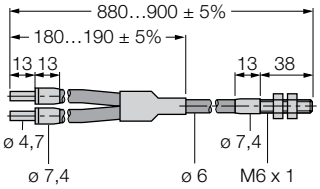

BT23PM6
glass fibre-optic sensor, sensing mode: diffuse mode sensor, PVC cable; for ambient temperatures of
-40…+105 °C

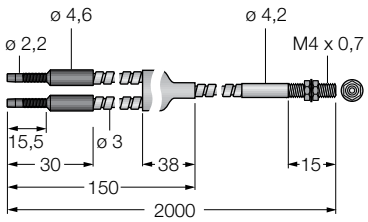

BMT16.6S-HT
Glass fiber, sensing mode: Diffuse mode, compact head, high temperature proof up to 315 °C, threaded bush (brass) M4 x 0.7, flexible stainless steel sheath

Glass fibers – Bifurcated fibers

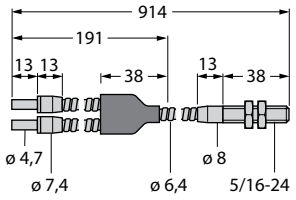

BT23S
Glass fiber, sensing mode: Diffuse mode, threaded sleeve (brass), bundle diameter 3.2 mm, flexible stainless steel sheath, ambient temperatures -140…+250 °C

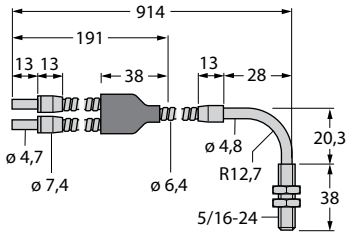

BAT23S
Glass fiber, sensing mode: Diffuse mode, head angled (90°), threaded sleeve (brass), flexible stainless steel sheath, ambient temperatures -140 °C …+250 °C

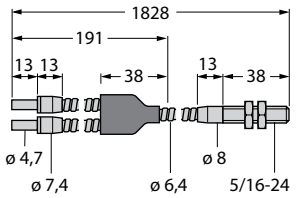

BT26S
Glass fiber, sensing mode: Diffuse mode, threaded sleeve (brass), bundle diameter 3.2 mm, flexible stainless steel sheath, ambient temperatures -140…+250 °C

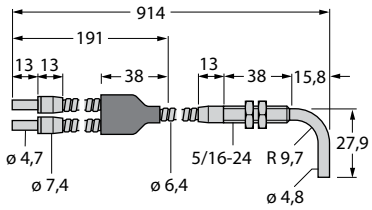

BTA23S
Glass fiber, sensing mode: Diffuse mode, threaded sleeve (brass), head angled (90°), flexible stainless steel sheath, ambient temperatures -140…+250 °C

Glass fibers – Individual fibers

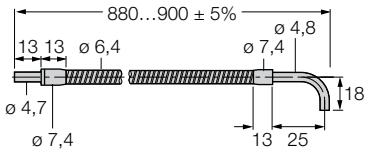

IA23S
Glass fiber, sensing mode: Opposed mode, head angled (90°), flexible stainless steel sheath, ambient temperatures -140…+250 °C

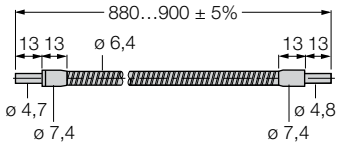

IF23S
Glass fiber, sensing mode: Opposed mode, flexible stainless steel sheath, ambient temperatures -140 °C …+250 °C

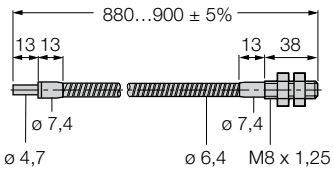

IT23SM8
Glass fiber, sensing mode: Opposed mode, threaded bush (brass) M8 x 1.25, bundle diameter 3,2 mm, flexible stainless steel sheath, ambient temperatures -140…+250 °C

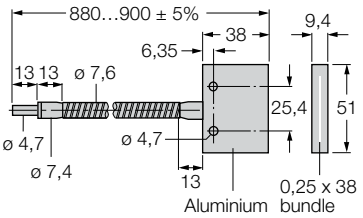

IR2.53S
Glass fiber, sensing mode: Opposed mode, rectangular beam, bundle diameter 4.0 mm, flexible stainless steel sheath, ambient temperatures -140…+250 °C

Glass fibers – Individual fibers

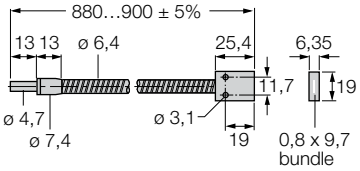

IR23S
Glass fiber, sensing mode: Opposed mode, rectangular beam, bundle diameter 3.2 mm, flexible stainless steel sheath, ambient temperature -140…+250 °C

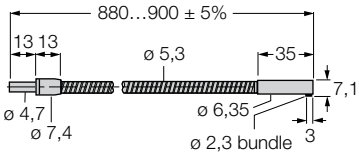

IA1.53SMTA
Glass fiber, sensing mode: Opposed mode, compact head (ø 1.5 mm), head angled (90°), flexible stainless steel sheath, ambient temperature -140 °C …+250 °C

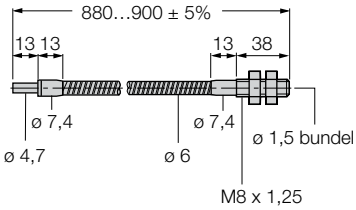

IT13SM8
Glass fiber, sensing mode: Opposed mode, threaded bush (brass) M8 x 1.25, bundle diameter 1,6 mm, flexible stainless steel sheath, ambient temperatures -140…+250 °C

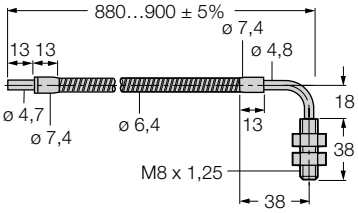

IAT23SM8
Glass fiber, sensing mode: Opposed mode sensor, head angled (90°), threaded bush (brass) M8 x 1.25, flexible stainless steel sheath, ambient temperature -140…+250 °C

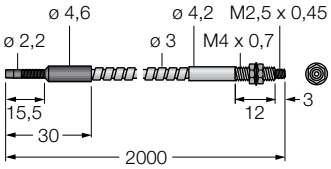

IMT.756.6S-HT
Glass fiber, sensing mode: Opposed mode, compact head, high temperature proof up to 315 °C, threaded bush (brass) M4 x 0.7, flexible stainless steel sheath

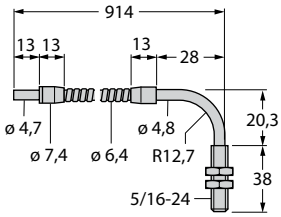

IAT23S
Glass fiber, sensing mode: Opposed mode, head angled (90°), threaded sleeve (brass), flexible stainless steel sheath, ambient temperatures -140 °C …+250 °C

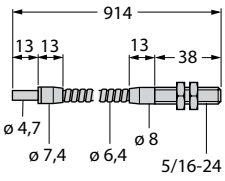

IT23S
Glass fiber, sensing mode: Opposed mode, threaded sleeve (brass), bundle diameter 3.2 mm, flexible stainless steel sheath, ambient temperatures -140…+250 °C

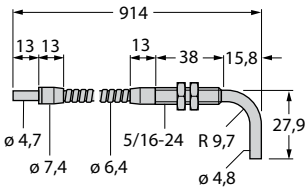

ITA23S
Glass fiber, sensing mode: Opposed mode, threaded sleeve (brass), head angled (90°), bundle diameter 3.2 mm, flexible stainless steel sheath, ambient temperatures -140…+250 °C

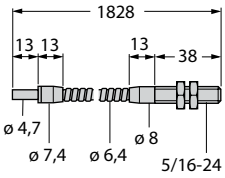

IT26S
Glass fiber, sensing mode: Opposed mode, threaded sleeve (brass), bundle diameter 3.2 mm, flexible stainless steel sheath, ambient temperatures -140…+250 °C

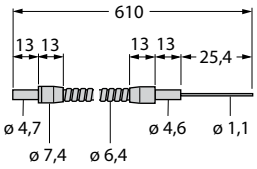

IMM.442S
Glass fiber, sensing mode: Opposed mode, miniature head (1.1 mm), bundle diameter, flexible stainless steel sheath

Glass fibers – Individual fibers

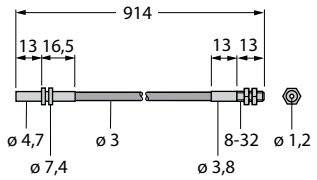

IMT.753P
Glass fiber, sensing mode: Opposed mode, compact head, high-temperature proof up to 315 °C, threaded sleeve (brass) M4 x 0.7, flexible stainless steel sheath

Glass fibers – Lenses

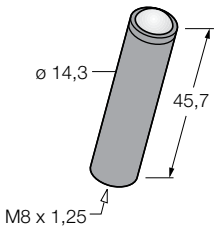

L9M8
Glass lens in a blue galvanized aluminium sheath, for range extension of glass fiber optic sensors, opposed mode, ambient temperature up to 315 °C

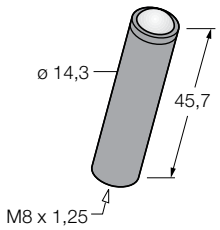

L10M8
Convergent glass lens encased in a red galvanized aluminium sheath to focus the light of bifurcated fibre optic sensors, e.g. for print/colour mark detection, focal distance 5 mm ± 1 mm, ambient temperature up to 315°C

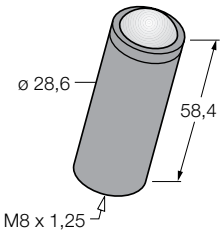

L16FM8
Glass lens in plastic jacket for glas fibers; for range extension of opposed mode sensors, ambient temperatures up to +105 °C

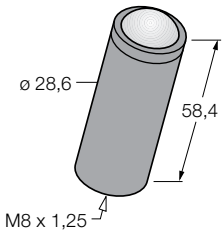

L16FALM8
Glass lens in a galvanized aluminium sheath; for range extension of glass fiber optic sensors, opposed and retroreflective mode, long range, ambient temperatures up to 315 °C

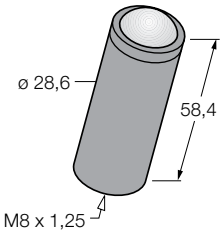

L16FSSM8
Stainless steel encased glass lens; for range extension of glass fiber optic sensors, opposed and retroreflective mode, long range, ambient temperatures up to +480 °C

Glass fibers – Level sensing tips

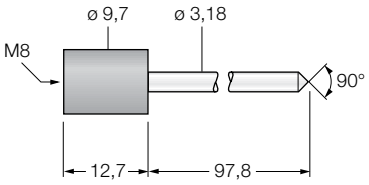

TGRM8MM
Monitoring of filling levels with bifurcated glas fibers, M8 thread (types „B…M8“), end tip screwed on the fiber, chemical resistant glass tip, ambient temperatures -140°C…+250°C

Vision sensors – Accessories

For applications in which vision sensors are poorly accessible, the remote display RD35 is the right solution. All adjustments can be made via a separate cable. After making the adjustments, the display is simply removed from the docking station and can be used for communication with other remote iVu sensors. The remote display can also be used for continuous control of hidden processes.

Features

- Cables for sensors, remote display and Ethernet connections
- Different brackets for flexible mounting
- Large selection of C-mount lenses with different focal lengths

remote display

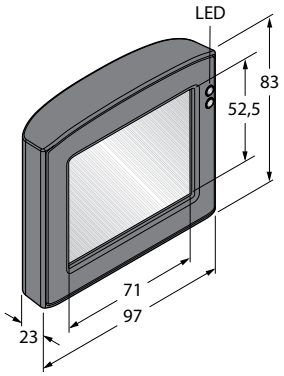

RD35
Remote display 3.5“, touch screen, connection via Molex integral connector

Connection cable

MQDC2S-806
Power supply, M12x1 female, 8-pole, 1.83 m

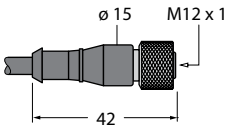

MQDC2S-1206
Power supply, M12x1 female, 12-pole, 1.83 m

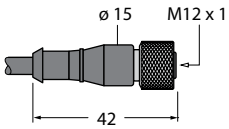

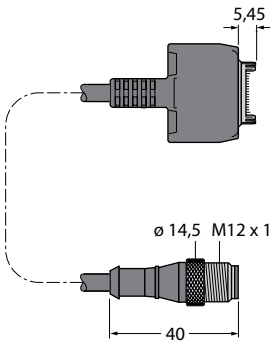

IVURD-MXK-806
Remote display, M12x1 male on Molex, 8-pole, 1.83 m

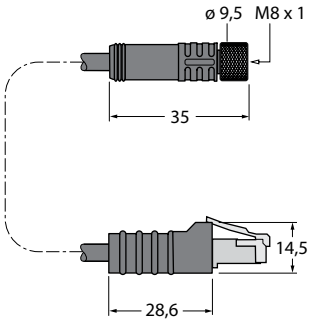

IVUC-E-406
Ethernet connection cable, M8x1 on RJ45, 4-pole, 2 m

Mounting bracket

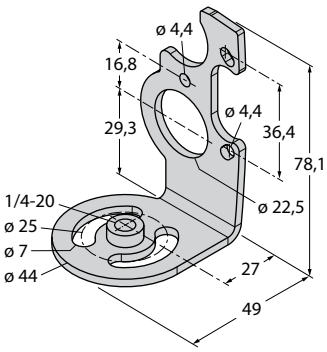

SMBIVURAR
Brackets for mounting on right side

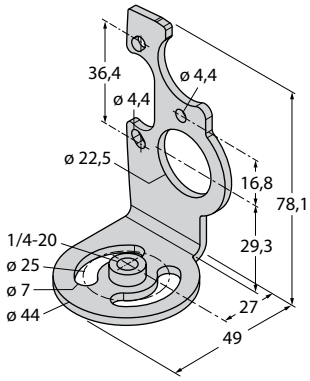

SMBIVURAL
Brackets for mounting on left side

Mounting bracket

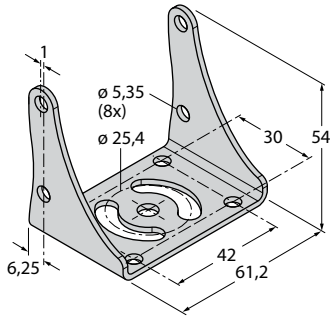

SMBIVUU
U-bracket for base mounting (incl. SMBI-VUB baseplate)

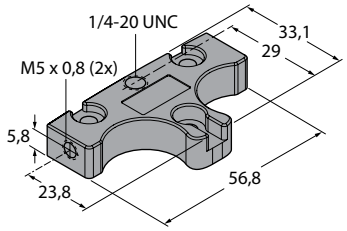

SMBIVUB
Baseplate to extend the installation

Lenses

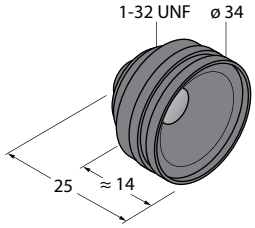

LCF04
Lens, 4 mm

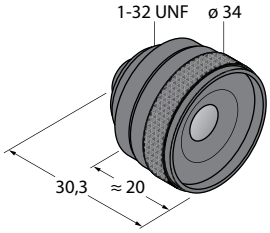

LCF08
Lens, 8 mm

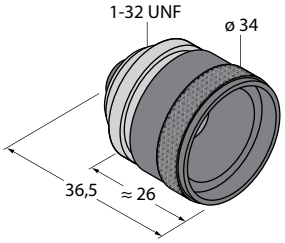

LCF12
Lens, 12 mm, with fixed focus

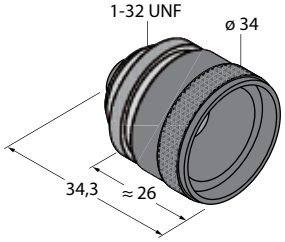

LCF16
Lens, 16 mm, with fixed focus

Lens covers

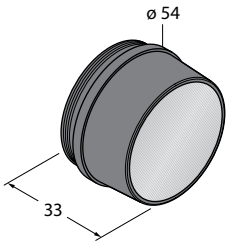

IVUSLC50-P
Rugged, watertight housing in IP67, short type

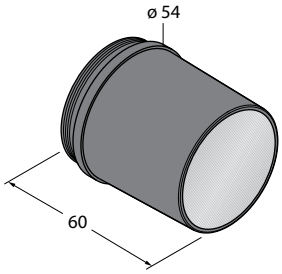

IVUSLC75-P
Rugged, watertight housing in IP67, long type

Ultrasonic sensors – Accessories

Our product portfolio comprises a teach adapter and a programming device to adjust ultrasonic sensors optimally to any application.

Features

- Teach adapter
- Programming device
- Ultrasonic focussing adapter

Hans Turck GmbH & Co. KG ▪ Tel. +49 208 49 52-0 ▪ Fax +49 208 49 52-264

Ultrasonic sensors

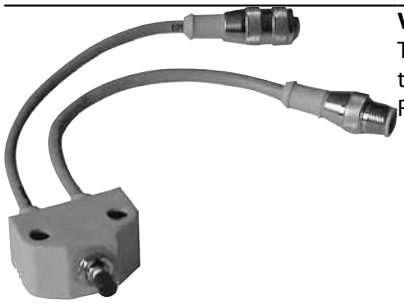

VB2-SP2
Teach adapter for ultrasonic sensors, types RUN and RUR

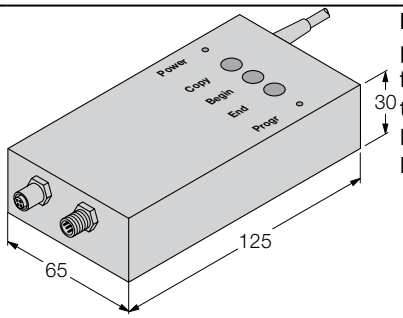

RU-PDI
programming device for configuration of ultrasonic sensor types RU…-M18 and RUC…-M30

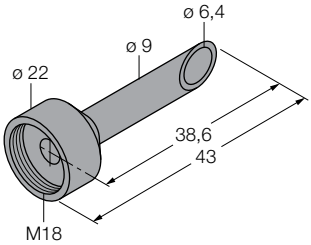

UWG18-6.4
Ultrasonic focussing-adapter for QS18U and S18U, internal diameter 6.4 mm

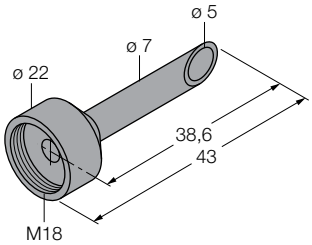

UWG18-5.0
Ultrasonic focussing-adapter for QS18U and S18U, internal diameter 5.0 mm

Glossary

Active Face

The point where the high-frequency magnetic field leaves the sensor. Regarding threaded barrel sensors, the active face is at the front. Concerning rectangular plastic sensors, the zone of the active face is marked with a target.

AID Alignment indicating device (photoelectric sensors)

The AID emits pulses at a rate proportional to the quantity of received light. The higher the pulse frequency, the higher the amount of light. A pulse rate of 1 Hz indicates that the sensor receives just the right amount of light it needs to switch. Slight contamination may cause malfunctioning. A pulse rate of 3 Hz or more ensures reliable operation of the sensor.

Air pressure (ultrasonic sensors)

Normal atmospheric changes of ± 5 % (for a local reference point) can lead to a deviation of the sensing range of about ± 0.6 %.

Air streams (ultrasonic sensors)

Air streams influence the echo time, however, air flow speeds of up to 10 m/s are insignificant. In conditions where turbulences prevail, for example above glowing metal, the use of ultrasonic sensors is not recommended, because the echo of distorted sound waves is difficult to evaluate.

Air temperature and moisture (ultrasonic sensors)

Both air temperature and moisture influence the sonic pulse duration. An increase of temperature by 20 °C causes a change of the sensing distance of max. 8 %. An increase of moisture results in an increase of the sound speed of max. 2 %. The distance to the object seems to decrease with a higher sound speed.

Alarm output

The alarm output indicates low excess gain or overload. Many sensors mentioned in this catalog feature an alarm output.

Ambient conditions (photoelectric sensors)

The ambient conditions determine the sensor's reliability. Working at its maximum range in demanding ambients, the sensor will soon perform less efficiently and finally be inoperable due to dirt covering the lens. If the same sensor works at half its distance in the same environment, the good performance may be kept stable for a longer time. The optimal range for each sensor and the individual ambient conditions is determined with the excess gain curve.

Analog output

The analog output signal serves for continuous outputting of a measured variable. The analog-signal format is for example 0/4…20 mA or 0/2…10 V.

Assured switching distance (Sa) capacitive sensors

Distance at which the sensor securely switches.

- Correlation to rated switching distance s_n : $s_a < 0.72 \times s_n$

Assured switching distance (Sa), inductive sensors

Distance at which the sensor securely switches.

- Correlation to rated switching distance s_a : $s_a < 0.81 \times s_n$

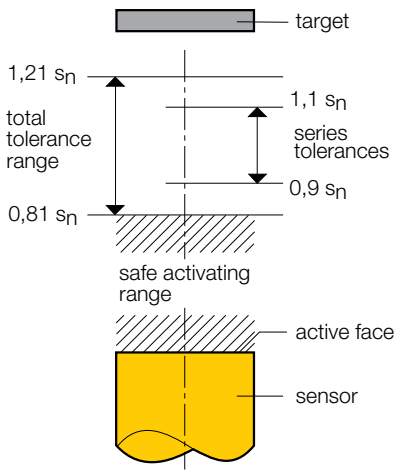

Background suppression (photoelectric sensors)

Normal diffuse mode sensors switch on when the level of light reflected back to the receiver exceeds the sensor's threshold. A dark object that is close and a bright object that is further away reflect the same quantity of light. It is recommended that, in order to have an acceptable contrast, any object that has to be ignored, should be at least four times further away than the actual target to be detected. Background suppression sensors not only detect the amount of energy returned to the sensor but also determine the distance to the object reflecting the light. A background suppression sensor detects objects reliably up to a set distance (the cutoff point) while ignoring other objects that are slightly further away regardless of the their surface reflectivity.

Blind zone (ultrasonic and linear position sensors)

Diffuse mode ultrasonic sensors are not capable of detecting targets located directly in front of the sonic transducer. The area between the sonic transducer surface and the beginning of the detection range is called blind zone and must always be kept free.

With regard to linear position sensors, the blind zone marks the area in which the positioning element can not be detected.

Burst pressure (pressure sensors)

The minimum pressure a sensor must withstand without damage. If the minimum pressure is exceeded, the sensor may leak or be destroyed.

Close-up range suppression (capacitive sensors)

Dirt deposits and moisture are blanked out through integrated self-compensation.

Color effects (photoelectric sensors)

Colored objects may affect the measurement accuracy of photoelectric sensors. White, red, yellow and orange objects reflect more light than green, blue or black ones. All values indicated in this catalog are related to the official white Kodak test card.

Contrast (photoelectric sensors)

The most important factor for reliable operation of photoelectric sensors is the contrast. Contrast is the degree of difference between two sensing conditions, light and dark. For example, a thick cardboard box breakes a retroreflective beam. The contrast is determined through adjusting first the light condition. For this purpose the sensitivity is reduced to the minimum level (counter clockwise rotation of button). Subsequently the level of sensitivity is increased until the status LED lights up. Next the dark condition is established when the sensor switches off. Subsequently the sensitivity is increased until the status LED lights up again. The best contrast is achieved if the difference between both switching states covers more than a third of the adjustable range. Sensors without sensitivity adjustment are not suited for low contrast applications.

Convergent mode sensors (photoelectric sensors)

Convergent mode sensors use a lens system that focuses the emitted light to an exact point in front of the sensor and focuses the receiver element at the same point. They operate like diffuse mode sensors, detecting an object through its reflectivity. Small objects, edges and transparent materials are reliably detected. It is important though that the objects are within the near-field depth. The near-field depth is defined as the area in front and behind the focal point in which objects are detected. The higher the reflectivity of an object the deeper the field. Through bundling light in the focal point, convergent mode sensors are capable of detecting objects with low reflectivity. They detect transparent materials easily, such as glass bottles on conveyor belts. Convergent mode sensors working with visible light are suited for the detection of color marks.

Correction factors

see Reduction factors

Crosstalk (ultrasonic sensors)

Crosstalk occures when ultrasonic sensors are mounted side by side. It can either be avoided through minimum distances kept between the sensors, alternate operation or synchronization (see multiplexing).

Degree of pollution

§ 6.1.3.2 of IEC 60947-1 defines 4 pollution degrees:
TURCK proximity sensors belong to category 3 acc. to IEC 60947-1 conductive or dry, non-conductive dirt that becomes conductive due to condensation.

Designs and cone angle (ultrasonic sensors)

TURCK ultrasonic sensors are available as M18/M30 threaded barrel and Q30 rectangular types, both producing a 6° narrow cone angle. Thanks to this, they detect relatively small objects with pinpoint accuracy. Through focussing energy, ranges of up to 8 m can be achieved. Q45U and T30U have far greater cone angles of 12° to 15°. The beam angle of CP40 types is 60°. These sensors are used for monitoring large areas and are immune to tilt when detecting objects with smooth and even surfaces.

Diffuse mode sensors (photoelectric sensors)

Like retroreflective sensors, diffuse mode sensors host emitter and receiver circuitry in the same housing. In this sensing mode, an object is not detected through the interruption of a light beam but through the reflectivity of an object. An object is detected when sufficient light is reflected back to the emitter. The switching distance of diffuse mode sensors depends largely on the reflectivity of the object.

Diffuse mode sensors with background suppression (photoelectric sensors)

Diffuse mode sensors with background suppression operate with an emitter an several receivers. The position of the object as well as the optical structure of the sensor determine on which receiver the largest quantity of light falls. The sensor electronics then determines whether the reflecting target is in

or outside the measuring range. They are available either with fixed or adjustable field.

Digital output

A digital output provides on/off signals depending on the values that are determined during a continuous measuring process. Digital outputs are normally implemented with PNP or NPN transistors or with an electromechanical relay.

Distance measuring gauge (inductive sensors)

Square metal plate to determine the measuring range s_n:
- Material: St37
- Thickness: 1 mm
- Edge lenth 3 x s_n , if 3 x s_n is greater than the diameter of the active face, otherwise just the diameter of the active face.

Dynamic output

Sensors with dynamic output respond highly sensitive and create a short pulse upon attenuation.

EMC

The electromagnetic compatibility (EMC) denotes the normally desired state in which technical devices do not cause or suffer undesired electrical or electromagnetic interference to or from other devices in the same environment.

Excess gain (photoelectric sensors)

Excess gain indicates how much light a sensor receives under certain conditions. This value is compared to the amount of light the sensor needs to switch. Excess gain 1 indicates that the sensor receives a minimum quantity of light, just enough to work. Excess gain 50 indicates that the sensor receives fifty times more light then needed for proper operation. In a clean environment, excess gain 1.5 is sufficient to ensure proper operation of the sensor in case of offset or gradual consumption of the LED. If dust, fume or mist is expected to contaminate the lens, excess gain should be higher than 1.5. All values for the sensing ranges stated in this catalog refer to excess gain 1.

Fixing torque

The tightening torque must be observed with threaded types to prevent torsional stress to the sensor housing. You find the corresponding values on the data sheets.
If strong vibrations are likely, use adhesive liquid thread lock (e.g. loctite 242).

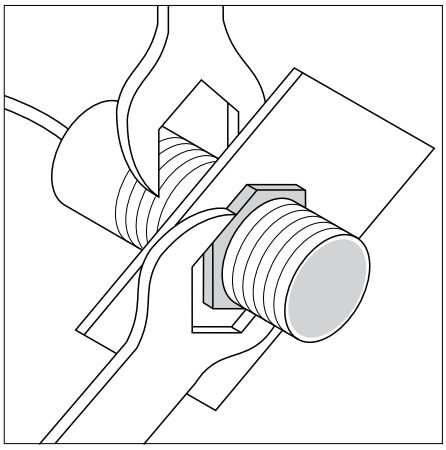

Flush and non-flush mounting (inductive and capacitive sensors)

Flush mountable sensors can be mounted in metal up to the active face. Non-flush mountable sensors have to protrude the metal,
they have larger sensing ranges.
Non-flush mountable *uprox* ®+ sensors with integrated self-compensation can be embedded partially (see technical data).
Flush mountable *uprox* ®+ sensors with integrated self-compensation can be recessed (see technical data).

Hysteresis function (pressure sensors)

This function is used to establish a stable switching state, independent of system-related pressure fluctuations near the adjusted set point. The switching range is limited by a switchpoint (sP) and a release point (rP) adjusted by the user.

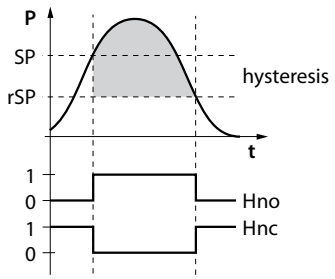

Linearity deviation

Indicated by sensors with analog output. Admissible deviation of the output signal from an ideal linear curve, indicated in % f.s. of the output signal.

Magnetic field immune

Magnetic field sensors incorporate a special ferrite core which makes them immune to magnetic AC and DC fields. Hence, they can be applied in welding systems. All *uprox* ®+ and *uprox* ® sensors are immune to magnetic DC or AC fields.

Measurement accuracy

The closeness of the measured value to the nominal value. See also Measurement deviation

Measurement deviation

Deviation of a measured value from a nominal value according to DIN 1319-1:1995.

Measurement error

see Measurement deviation

Measuring range

Indicated by sensors with analog output. The range within which the output signal is changed.

Media temperature (flow sensors)

The temperature range in which the sensor operates according to its measurement properties.

Minimum operating current (Im)

Minimum current to maintain the functionality. Only indicated for 2-wire sensors with switching output.

Mounting instructions (for cylindrical sensors)

General mounting instructions for threaded cylinders.
DIN 13 specifies the thread sizes, screw-in depths of threaded devices and testing of threads.
To minimize the effects of admissible tolerances within the thread, the length of the thread should not exceed the screw-in depths listed in the table below.

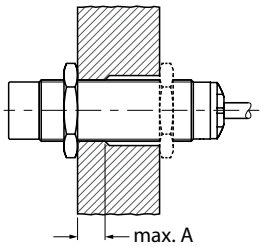

	A [mm]
M8	8
M12	10
M18	12
M30	16

Multiplexing (ultrasonic sensors)

Mutual influence is impossible with alternately operating ultrasonic sensors. The more sensors are operated alternately, the lower the switching frequency. The X1-line of the sensor series RUC-M30, RU-Q30 and RU-M18 can also be used as an enable input for multiplexing. If the X1-line is connected to +24 V, the sensor is enabled; if the X1-line is connected to 0 V, the sensor is disabled. Multiplexing via the X1-line has the advantage that for each enable-operation only the response time and not the time-delay before availability has to be considered. Once connected to the X1 line, most sensors can be programmed with the RU-PDI to multiplex automatically.

No-load current (Io)

2-wire sensors: The current which flows in non-active condition.
3/4-wire sensors: Off-state current flow between output and 0 V (PNP output) resp. output and supply voltage (NPN output), see also residual current.

Noise suppression (ultrasonic sensors)

Noise such as metal clink or roaring pressure have no influence on the evaluation of signals, thanks to the optimally adjustable frequency range and the patented noise suppression circuitry.

Nomogram (pipe diameter DN 25…500)

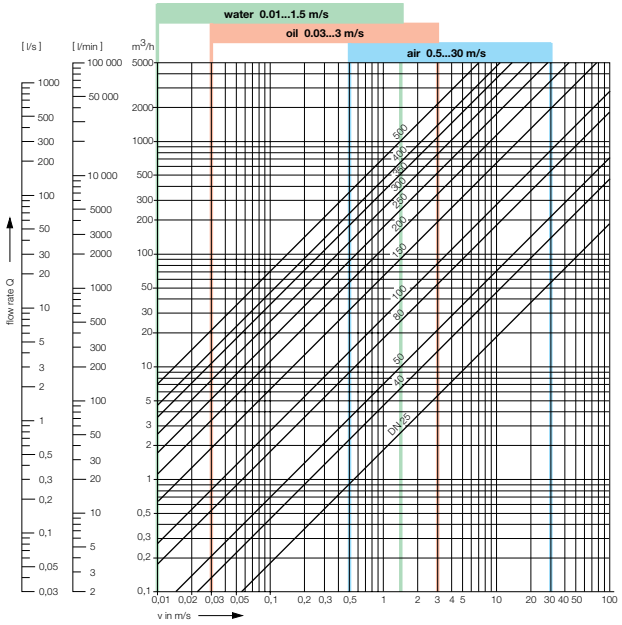

Nomogram (pipe diameter DN 6…25)

The nomogram is used to convert volume flow rate (l/min) into flow speed (m/s) in relation to the pipe diameter (DN), as shown in the example below. If the flow speed is outside the detection range, the speed can be adjusted through changing the pipe diameter to guarantee safe operation of the sensor.
Example: With a flow rate of 30 l/min and a pipe diameter of DN25, the flow speed is 1 m/s.
Conversion units: 1 imp. gallon = 4.546 liters; 1 US gallon = 3.785 liters

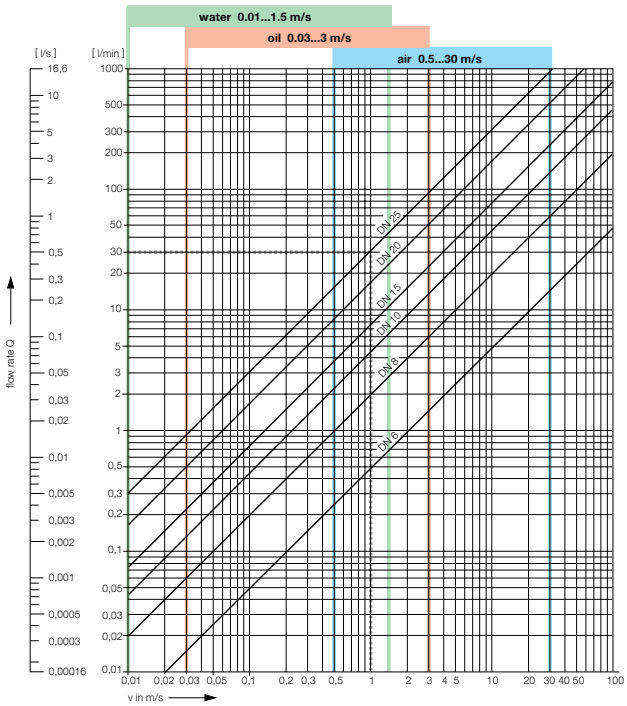

Nomogram for Ex flow sensors (pipe diameter DN 25…500)

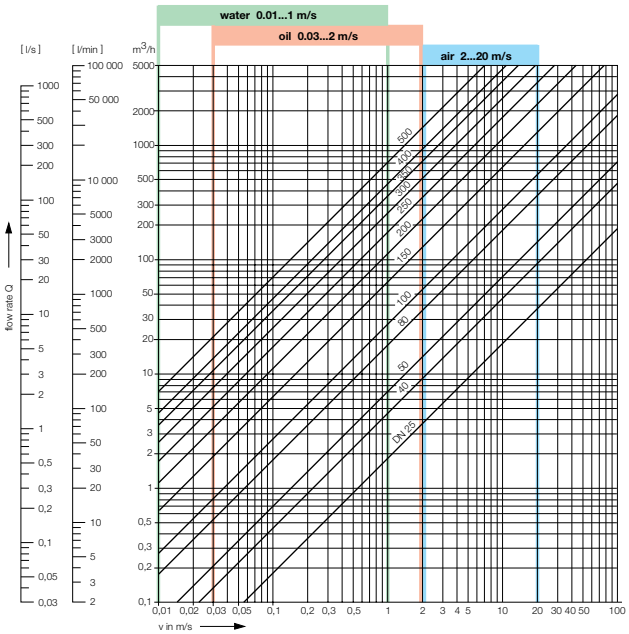

Nomogram for Ex flow sensors (pipe diameter DN 6…25)

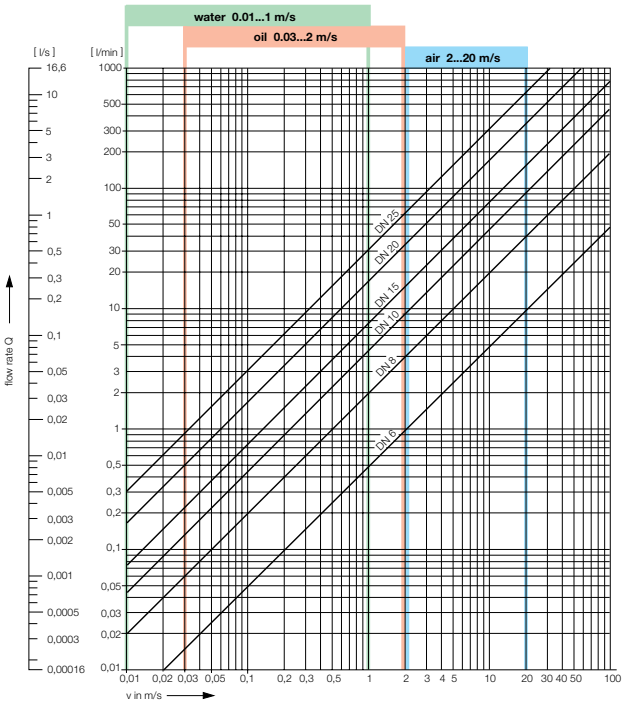

Object color (photoelectric sensors)

The color as well as the transparency of objects has no influence on the sensing range. Glass or perspex are reliably detected.

Object surface (photoelectric sensors)

Sometimes the surface quality of an object helps to choose the right sensor. Photoelectric sensors are usually not the right choice for mirror-like surfaces. Measuring errors are likely to occur even with semi-transparent and porous surfaces such as plastic or foam.

Operating modes (ultrasonic and photoelectric sensors)

Ultrasonic sensors are mainly used in the diffuse mode. An object in front of the sensor is detected by the partly reflected sound wave. They are also available as opposed and retroreflective mode devices. In opposed mode, ultrasonic waves are continuously propagating between emitter and receiver. The ultrasonic sound is interrupted by an object between emitter and receiver, causing the sensor to switch. Photoelectric sensors operate according to the same principles using light instead of sound.

Operating range (flow sensors)

The measuring sensitivity of the sensors depends on the extraction of heat, which is proportional to the flow speed and the heat conductivity of the medium: The lower the heat conductivity of the medium, the faster the medium has to flow in order to detect the extraction of heat. At the same flow rate compared to water, air for example can only conduct away a fraction of the heat from the heating element. Therefore different operating ranges apply for water, oil or air.

Operating range (pressure sensors)

Is the tolerance in which deviation of temperature is permitted.

Operating range (temperature sensors)

Is the tolerance in which deviation of temperature is permitted.

Opposed mode sensors (photoelectric sensors)

Opposed mode sensors consist of emitter and receiver mounted in separate housings. They are installed directly opposite each other in such a way that the light from the emitter is aimed directly at the receiver. When an object interrupts or weakens the light beam, the sensor switches. Opposed mode sensors are the most reliable photoelectric sensors for detection of opaque targets.

Optical fibers (photoelectric sensors)

Optical fibers are suited for many applications:
- Detection of small objects
- Fit in confined spaces
- High-temperature resistant
- Immune to strong magnetic fields
- Vibration proof
- Resistant to aggressive gases
- Suited for explosion hazardous areas

Optical fibers made of glass or plastic are used to pipe light from the sensor to the object and back. They are passive components of a photoelectric system. Because of their passiveness and the absence of moving parts, light can be piped in hazardous areas. They are also immune to electromagnetic interference. The glass or plastic core of the fibers is sheathed. The sheath has a lower refractive index than the core. The law of total internal reflection defines,when a light beam hits the medium boundary between two media with different refractive index, it is totally reflected, provided the angle of incidence does not exceed a determined critical angle.

Output function (see also electrical versions)

Typical output functions are: NAMUR: Normalized output signal acc. to EN 60947-5-6 normally open (NO): The output is open when the sensor is non-activated and closed when the sensor is activated. Normally closed (NC): The output is closed when the sensor is non-activated and open when the sensor is activated. Complementary/Antivalent (two-way contact): One of the two outputs is closed in the non-activated state and the other output is closed in the activated state. Analog output: Analog output: The output supplies a normalized output signal (0/4…20 mA or 0/2…10 V).

Overpressure (pressure sensors)

The maximum pressure load exerted on the sensor occasionally without impeding its functionality, yet allowing the tolerances to be exceeded.

Polarizing filter (photoelectric sensors)

If strong reflecting objects have to be detected with retroreflective sensors a polarizing filter is required. A triple reflector redirects the light beam by 90°, maintaining the polarization of the light reflected by the object's surface. The polarizing filter enables the sensor to distinguish between light thrown back from the object or from the reflector.

Power consumption

The current consumption defines the current that is used for the power supply of the device. For sensors with switching output the power consumption is indicated without load.

Precipitation and moisture (ultrasonic sensors)

Normal concentrations of rain or snow do not affect the sensor's operability. The CP40 transducers are not protected against moisture (protection class IP40). All other types are not damaged by water but correct functionality may be impaired. Ultrasonic transducers should generally be protected against direct wetting.

Pressure range (pressure sensors)

The operating range in which deviation of pressure is permitted.

Principle of photoelectric sensing

Photoelectric sensors operate on the principle of emitting and receiving light. All sensors in this catalog are compact devices having optics, amplifier and switching output in the same housing. A diode emits a light beam which is either cut off (opposed mode) or reflected by an object (retroreflective/diffuse mode). The sensor detects a change in light intensity causing the output to switch. Photoelectric sensors operate with modulated light in order to blank out unwanted influence of ambient light.

Protection against pre-attenuation

Self-compensation inhibits pre-attenuation of non-flush mountable sensors and enables partial embedding of the same with reduced switching distance.

Protection rating

Protection class according to IEC/EN 60529, defines the protection of the enclosure against contact with and ingress of foreign matters and moisture.
The customary protection classes of TURCK products are:

- IP20: Protection against accidental physical contact (intended for installation in cabinets only)
- IP65: Full protection against dust and hose water
- IP67: Full protection against dust and short submersion in water
- IP69K: Full protection against dust and high-pressure/steam-jet cleaning

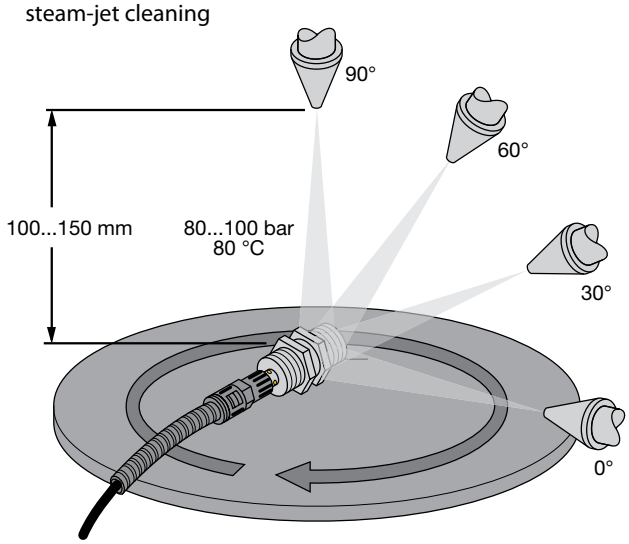

Rated operating distance (sn)

The rated operating distance is measured through the axial approach of a standard target. Manufacturing tolerances and external influences such as temperature and voltage are not considered. The tables only indicate the rated operating distances.

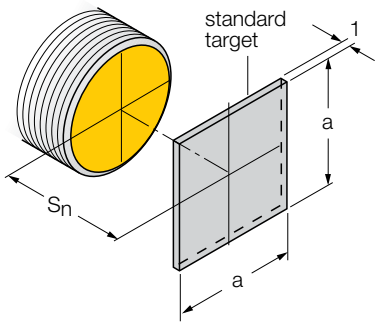

Readiness delay

Sensors feature a readiness delay of < 80 ms to suppress failure pulses occuring in the period between power-on and operational readiness.

Real switching distance (Sr)

Real switching distance (s_r):
- Switching distance under fixed temperature and supply conditions
- Factory set tolerances are taken into account
- Correlation to rated switching distance s_n : $0.9 \times s_n < s_r < 1.1 \times s_n$

Reduction factor

The switching distance of inductive ferrite core sensors depends on the material of the actuating element.
The maximum switching distance is attained with mild steel St37, whereas with other metals only smaller switching distances are achieved.
The reduction factor indicates to which fraction the switching distance is reduced by using other metals than St37.
Reduction factor, typical values: Steel (St37): 1; brass: 0.35…0.5; copper: 0.25…0.45; aluminium: 0.35…0.50; stainless steel: 0.6…1 *uprox* ® and *uprox* ®+ sensors have the same switching distance for all metals. The reduction factor is always 1.

Reflectivity of surfaces (photoelectric sensors)

An object has to reflect sufficient light in order to be detected by a diffuse or a convergent mode sensor. The amount of light received, depends on the emitting power of the sensor and the reflectivity of the object. A dark object reflects less light than a bright one (see Excess gain). A smooth, mirror-like surface has to be aligned perpendicular to the sensor's axis. Otherwise, the light is not reflected back.

Reflectors and filters (photoelectric sensors)

All sensing ranges of photoelectric sensors and excess gain curves of retroreflective sensors mentioned in this catalog were determined with the BRT75 reflector. Retroreflectors are designed in such a way that light is reflected back in the same direction. The amount of light reflected back to the sensor depends on two factors:
1. The size of the reflecting surface
2. The reflector's reflectivity

Short distances require a reflector with Ø 25 mm which is capable of reflecting the light as good as a Ø 75 mm reflector. A Ø 75 mm reflector reflects up to nine times more light than a Ø 25 mm and is suited for longer distances.

Refreshing rate

The period a value takes to be formed in an application in device A, to be sent on line to a device B and made available to the application there. The refreshing rate should not be confused with the response time, which is slower in most cases. A floating average value can be formed for a data volume of 10 ms and given out every 1 ms. In this case the refreshing rate is 1/1 ms resp. 1 kHz, while the response time is 6 ms.

Release point (pressure sensors)

In hysteresis mode, the output switches at the release point (rP) when system pressure decreases. In window mode, the output switches at the release point (rP) independent of whether system pressure increases or decreases.

Repeatability

- Sensors with switching output (digital): Deviation of the switchpoint after often repeated switching, under identical conditions and with the same sensor.
- Sensors with analog output: Change of the output value under the same conditions and with the same sensor. Value of the measured range indicated in percentage.

Repeatability

Repeatability is defined as the deviation of the switchpoint after often repeated switching, under identical conditions and with the same digital sensor. TURCK uses the repeatability to measure the performance of digital sensors. For example, a laser sensor is programmed to switch at 100 mm. The actual distance is measured twenty times with a micrometer. The standard deviation measured is 0.01 mm; the two sigma repeatability is 0.02 mm.

Residual current (Ir)

2-wire sensors: The current which flows in non-active condition.
3 and 4-wire sensors: The current which flows in non-active condition between the output and 0 V (PNP output), resp. between output and supply voltage (NPN output).

Resolution

Analog signals converted to digital signals by a DA converter. Each digital signal is individually resolved. The resolution indicates the increment of the signal, meaning the smallest possible change of the analog output signal.

Response time (flow sensors)

Is the time a sensor takes to react to a given change of an input signal. Exampel: A temperature sensor working at 0 °C is instantly immersed in 100 °C hot water. After 4 seconds, the sensor indicates 63 °C. The response time is thus 4 seconds.

Retroreflective sensors (photoelectric sensors)

Retroreflective sensors host both emitter and receiver circuitry in the same housing. A light beam is established between the emitter, reflector and receiver. An object is sensed when it interrupts the beam. Retroreflective sensors share some advantages with opposed mode sensors such as good contrast and high excess gain. Moreover, only one device has to be installed and wired. Of disadvantage are short sensing ranges and objects with shiny surfaces when using devices without polarizing filter.

Reverse polarity protection

Protection against false connection.

Ripple

Irregularities in the DC voltage may occur after the VAC mains voltage is rectified to a VDC voltage (due to the original sinusoidal wave of the mains voltage). The remaining wave troughs can be compensated ("smoothed") by means of a capacitor connected in parallel to the load or a coil connected in series to the load. The remaining AC component after smoothing is called the ripple or hum voltage. 10% ripple (peak to peak) of supply voltage is usually tolerated.

Sensing conditions (ultrasonic sensors)

The ultrasonic transducers are especially optimized for the medium „air". They can also be used for other gaseous media. In this case the sensitivity and the range need to be adjusted.

Short-circuit protection

Protection against overload.

Standby time (flow sensors)

The time a flow sensor needs to achieve a stable state after it has been turned on.

Static output (ring sensors)

Sensors with a static output produce a constant pulse as long as they are attenuated. In principle, all proximity sensors feature a static output. The term is used in connection with ring sensors (see also dynamic output).

Storage temperature

The storage temperature may range from -30…+85 °C.

Surface roughness (ultrasonic sensors)

Ultrasonic sensors detect objects with a surface roughness exceeding 0.15 mm. On the one hand, the surface need not be aligned exactly towards the sensor but on the other hand the sensing range has to be reduced.

Surge current

Inrush current transiently flowing through the output.

Switch element function

see Output function

Switch-off time (flow sensors)

Time the flow sensor needs to measure and display the drop in flow speed.

Switch-on time (flow sensors)

Time the flow sensor needs to measure and display the increase in flow speed.

Switching delay

Is the period between attaining a switchpoint and resulting change of status at the output.

Switching distance (s)

Distance at which a change of signal is produced with axial approach of the object.

Switching frequency

The switching frequency indicates the number of status changes per second. The higher the switching frequency the more often switching can be repeated per second resp. the faster the switching operation.
Concerning proximity switches, the switching frequency indicates the maximum number of changes between attenuated and non-attenuated state per second (Hz).

Maximum switching frequency at an operating distance $s = s_n/2$, measured with a gauge wheel.

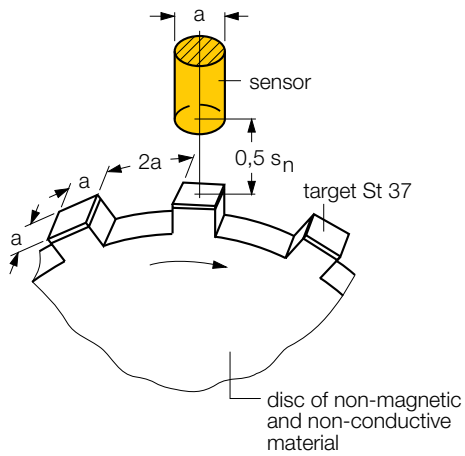

Switching frequency (max.)

The max. switching frequency of a device indicates how many changes of the switching state are possible within a second.

Switchpoint (pressure and temperature sensors)

In hysteresis mode, the output switches at the switchpoint (sP) when system pressure or temperature increases. In window mode, the output switches at the sP independent of whether system pressure or temperature increases or decreases.

Switchpoint accuracy (pressure and temperature sensors)

The switchpoint accuracy defines the maximum admissible deviation of an adjusted value from the actual switchpoint value.

Synchronization (ultrasonic sensors)

Crosstalk can be avoided through synchronization. Most sensors of the RUC-M30, RU-M18 and RU-Q30 series synchronize themselves simply through connecting the synchronization line. They emit sonic pulses simultaneously, thus performing like a single sensor with extended range.

System pressure (pressure sensors)

The media pressure exerted on the pressure sensor.

Temperature drift

Temperature-dependent change of switchpoint or output value.

Temperature gradient (flow sensors)

The temperature gradient defines the max. temperature rise that a flow sensor can adapt to without damage. The sensors have the ability to compensate temperature jumps within specified tolerances. Excess of these tolerances may lead to malfunction. In this case, the sensor has to be adjusted to the new temperature range to ensure correct detection of flow. Unit of measure: °C/min. or K/min.

Transparent objects (photoelectric sensors)

Transparent objects are hardly detected by opposed mode sensors as they reflect the light beam only partially. Retroreflective sensors are better suited for this task because the light beam passes the object twice. This improves the contrast considerably. Anyhow, the switchpoint has to be adjusted precisely which is only possible with sensors featuring sensitivity adjustment. Diffuse mode or convergent mode sensors are best suited for this job.

Usable operating distance (Su) (inductive sensors)

Allowed switching distance within the admissible temperature and voltage range.
Correlation to rated operating distance

- $0.9 \times s_r < s_u < 1.1 \times s_r$ $0.81 \times s_n < s_u < 1.21 \times s_n$

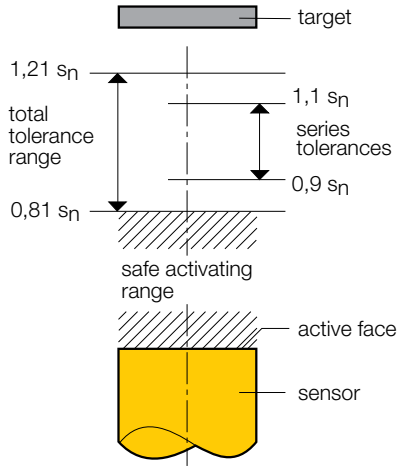

Usable operating distance (Su) (inductive sensors)

Allowed switching distance within the admissible temperature and voltage range.
Correlation to rated operating distance

- $0.8 \times s_r < s_u < 1.2 \times s_r$ $0.72 \times s_n < s_u < 1.32 \times s_n$

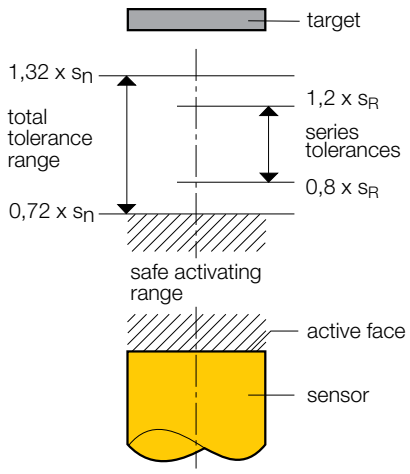

Utilization category

The utilization category indicates the area in which sensors can be operated. Category IEC 60947-5-2 is defined in relation to the correspondent rated current, rated voltage and the load current. Inductive sensors by TURCK fulfill the following categories:

- Direct current DC-13: Control of electromagnets.
- Alternate current AC-140: Control of smaller electromagnetic loads with holding current > 0.2 A.

Voltage drop

Voltage drop is the reduction in voltage of a connected output.

Weld-proof

Weld-resistant sensors can be applied in welding systems. They have a special ferrite core incorporated which makes them immune to magnetic AC and DC fields. (see also Magnetic field immune).

Window function

The window function is used to implement a range in which the sensor takes on a defined switching state. The user can adjust the switching range (window) by setting an upper and lower limit.

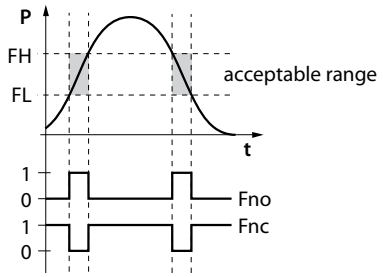

Wire-break protection

If the supply cable is cut, the output stays off (no failure).

Electrical versions

NAMUR

NAMUR sensors acc. to EN 60947-5-6 are polarized 2-wire devices, changing their internal resistance in dependence on the attenuation (continuous linear/current characteristic). They are connected to external switching amplifiers which convert current flow changes into a binary output signals.

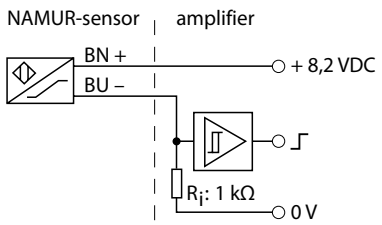

Advantages of NAMUR sensors

When used in combination with approved isolating switching amplifiers, they can be applied in Ex-areas.
Wire-break and short-circuit can be monitored continuously via the switching amplifier.
Sensors with NAMUR output are also suitable for monitoring fast moving objects and high rotation speeds. NAMUR sensors are identically designed, nonetheless they achieve higher switching frequencies.

Nominal operating values

The nominal operating values specified acc. to EN 60947-5-6 are:

- U_0 = 8.2 VDC
- R_i = 1000 Ω
- $I_{actuated}$ ≤ 1.2 mA
- $I_{non\text{-}actuated}$ ≥ 2.1 mA
- Please note, that the characteristic of capacitive and magnetic field sensors is inverted due to their functional principle.

TURCK NAMUR sensors are specified right in the middle of the NAMUR window at 1.55 mA for s_n and1.75 mA for $s_n + D_s$ (see characteristic).

- Reverse-polarity protected
- Hysteresis H: 1…10 %
- Temperature drift < ± 10 % (Nominal temperature range -20…+70 °C) < ± 20 % (extended temperature range -40/ -25…+100/120 °C)
- Repeatability: < 2 %

NAMUR characteristic inductive sensors

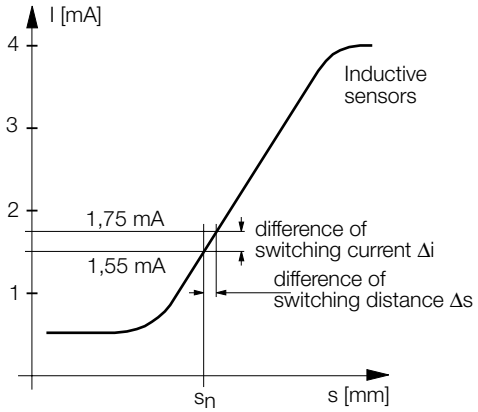

NAMUR characteristic capacitive and magnetic field sensors

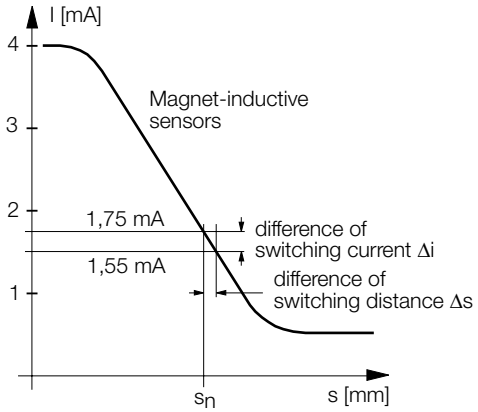

Indication of switching state (LED)

Owing to the special functional principle, inductive sensors with NAMUR output have an inverted LED functionality: The LED doesn't light up in attenuated state but in non-attenuated state. This is because in attenuated state not enough power is supplied to light up the LED (NAMUR characteristic), whereas in non-attenuated state enough power is provided.

Environmental conditions

Protection class (IEC 60529/EN 60529) IP67
Pollution degree 3
Shock resistance 30 x g (11 ms)
Vibration resistance 55 Hz (1 mm)

Usage in Ex areas

When used in Ex areas, NAMUR sensors must be operated at approved isolating switching amplifiers with intrinsically safe control circuits. The TURCK product portfolio comprises many Ex-approved isolating switching amplifiers in different designs.

- Supply and evaluation via external approved switching amplifier identified by …Y1.-…
- Ignition protection type Ex ia IIC T4… T6 (approved for use in Ex areas; EC-type-examination certificate acc. to EN 50020 (EN 60079-11) and EN 50014 (EN 60079-0); Approved acc. to directive 94/9/EC, KEMA 02 ATEX 1090 X)
- Static charging must be avoided with sensors of the following series: CA40, CK40, CP40, CP80, DSU26, DSU35, K40, K90, MP, Q80
- For installation observe the certificate and the operating instructions

For use in safety-related systems acc. to IEC 61508

Almost all NAMUR sensors from our product portfolio are suited for use in safety-related systems (including SIL2 acc. to IEC 61508). This has been certified by an independent test body (TÜV). The certificate is valid for all TURCK sensors with standard NAMUR output. These sensors are 100 % compatible with all standard NAMUR signal processors as well as with (safety) PLCs featuring NAMUR inputs.
Probability of failure (PFD_{avg})

- 7.00×10^{-6} test interval: 1 year
- 3.50×10^{-6} test interval: 5 years
- Safe failure fraction (SFF): 0.9

Series or parallel connected NAMUR sensors

Operation at TURCK switching amplifiers is not permitted.

Maximum cable length

Two conditions must be ensured to determine the maximum cable length:
Condition 1:
EN 60947-5-6 stipulates 50 Ω as the maximum cable resistance. The maximum cable length can be calculated using this value and the core cross-section:
$l = R \times Q / \delta$
l = max. core length in [m]
R = max. resistance in [Ω]
Q = core cross-section in mm^2 δ = resistivity of core material (0.0175 for copper) in [Ω x mm^2 x m]
Example for a copper core with a core cross-section of Q = 0.34 mm^2 :
$l = 50 \times 0.34 / 0.0175 = 971$ m
As NAMUR sensors are operated by two wires, the calculated value must be divided by two. The result is the maximum cable length: 971 / 2 = 485.5 m

Note: Please note that this calculation doesn't consider additional resistances such as corrosion or transfer resistance of connecting terminals!

Condition 2: If the sensor is operated in explosion hazardous areas, the maximal inductance and capacitance must additionally be observed. You find the corresponding values on the technical data sheets of the NAMUR sensors and isolating switching amplifiers.
Example: Isolating switching amplifier IM1-22Ex-R:
C_{max} = 830 nF; L_{max} = 5 mH (for Ex ia IIC);
sensor Bi5-EG18SK-Y1X: C_i = 150 nF; L_i = 150 µH
When subtracting the values of the isolating switching amplifiers and sensors, you get the following values for the cable:
C = 680 nF; L = 4.85 mH.
Cable suppliers usually declare the values for inductance and capacitance per meter, whereby 110 nF/km and 1 mH/km are taken as reference values.
Applying these reference values to our example, leads to the following results: max. cable length for 110 nF/km:
680 nF / 110 nF = 6.18 km;
max. cable length for 1 mH/km: 4.85 mH / 1 mH = 4.85 km
Under consideration of the above mentioned two conditions, the maximum admissible cable length is the smallest calculated value. This example provides the following values:

- Condition 1: Cable resistance: 485.5 m
- Condition 2:
  a) Cable inductance: 6.18 km
  b) Cable capacitance: 4.85 km

The maximum cable length is 485.5 m.

Sensors with transistor output 3/4-wire DC

Advantages

- Very low residual current
- Easily connected to relay or PCS
- Series and parallel connection

Power supply

- Operating voltage U_B : 10…30 VDC, 10…55 VDC or 10…65 VDC
- Ripple W_{PP} : 10 %

Switching output

- 3-wire sensors: Normally open (NO) or normally closed (NC)
- 4-wire sensors: Antivalent
- Cyclic short-circuit protection for nearly all devices
- Wire-break proof
- Reverse-polarity protected
- Utilization category 13
- Rated insulation voltage U_i = 0.5 kV
- Conditional rated short-circuit current up to 100 A

3-wire, DC (PNP)

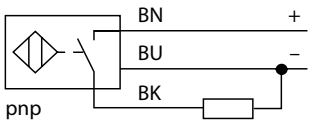

3-wire, DC (NPN)

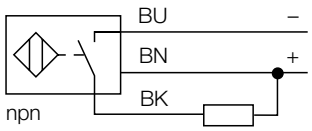

4-wire, DC (PNP)

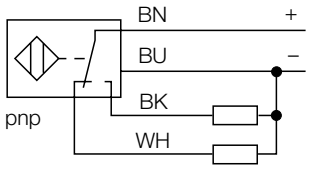

4-wire, DC (NPN)

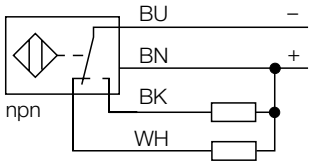

Environmental conditions

- Protection class (IEC 60529/EN 60529) IP67/IP68/IP69K (acc. to Sensor type)
- Pollution degree 3
- Shock resistance 30 x g (11 ms)
- Vibration resistance 55 Hz (1 mm)

Series and parallel circuits

With series connected devices, voltage drops and readiness delay of all sensors are added.

Series circuit, 3-wire, DC

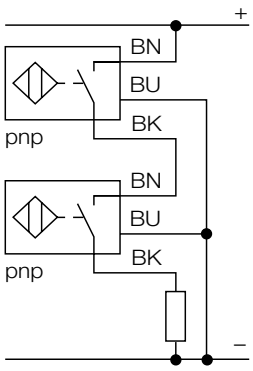

Parallel circuit, 3-wire, DC

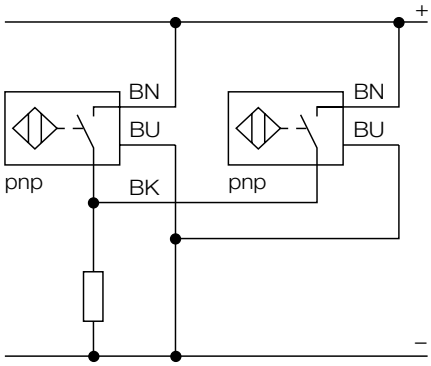

Sensors with transistor output 2-wire DC

Advantages

- Only two wires
- Short-circuit protected

Power supply

- Operating voltage U_B : 10…30 VDC or 10…65 VDC (see type code)
- Ripple W_{PP} : 10 %

Switching function

- Normally open (NO)
- Cyclic short-circuit protection (Overload trip point > I_e + 20 mA)
- Reverse-polarity protected
- Residual currrent I_r : ≤ 0.6 mA
- Voltage drop U_d : non-polarized version (AD) < 5 V, polarized version (AG) < 4.2 V
- Utilization category 13

2-wire, DC (polarized)

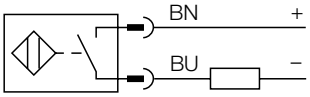

2-wire, DC (non-polarized)

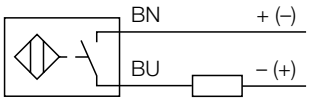

Environmental conditions

- Protection class at least IP65
- Pollution degree 3
- Shock resistance: 30 x g (11 ms)
- Vibration resistance: 55 Hz (1 mm)

Series connected 2-wire sensors

- NO contact: AND link
- NOR link

With series connected devices, voltage drops add up across the sensors. This reduces the usable voltage at the load. Therefore, care has to be taken that the operating voltage at the load may not fall below its minimum.

Series connected 2-wire sensors

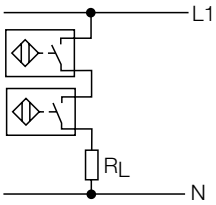

2-wire AC/DC sensors

Advantages

- Only two wires
- Connectable to AC and DC current
- Short-circuit resistant types ADZ, RDZ, FDZ

Power supply

- Operating voltage for inductive and capacitive sensors U_B : 20…250 VAC or 10…300 VDC
- Except sensors with selective properties „NF“ and sensors with extended temperature range up to +120 °C

Switching behaviour

- Normally open (NO): Identifier: …ADZ/AZ
- Normally closed (NC): Identifier: …RDZ/RZ
- Normally open (NO) and normally closed (NC) contacts are programmed via connection cable: …FDZ/FZ
- Residual current: $I_r \leq 1.7$ mA (AC), $I_r \leq 1.5$ mA (DC)
- Latching short-circuit protection, types ADZ, RDZ, FDZ, peak current ≤ 8 A (≤ 5 ms, max. 5 Hz) overload trip point > 500 mA
- Voltage drop $U_d < 6\ V_{eff}$ Hysteresis H: 3…15 %
- Temperature drift < ± 10 % (Nominal temperature range -20…+70 °C) < ± 20 % (extended temperature range -40/-25…+100/120 °C)
- Repeatability R: < 2 %
- Utilization category: AC 140/DC 13
- Rated insulation voltage U_i = 1.5 kV
- Conditional rated short-circuit current 100 A
- The rated operating current is limited at ambient temperatures > 40 °C

2-wire AC/DC, NC

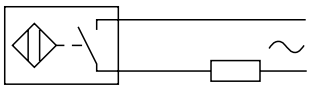
N.O.

2-wire AC/DC, NO

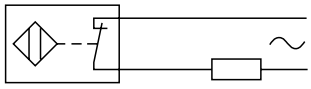
N.C.

Environmental conditions

- Protection class (IEC 60529/EN 60529): IP67
- Degree of pollution: 3
- Shock resistance: 30 x g (11 ms)
- Vibration resistance: 55 Hz (1 mm)

Series connection of 2-wire AC/DC sensors

- NO contact: AND link
- NC contact: NOR link

With series connected devices, voltage drops add up across the sensors. This reduces the usable voltage at the load. Therefore, care has to be taken that the operating voltage at the load may not fall below its minimum (observe mains voltage fluctuations).

Series connection of 2-wire AC/DC sensors

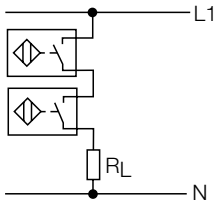

Series connected mechanical switches and AC/DC sensors

When the contact is open the sensor power supply is interrupted. Closing the mechanical contact while the sensor is attenuated may cause transient malfunction of the sensor. The readiness delay (t = 80 ms) prevents immediate switching.
Solution: A resistor arranged in parallel to the mechanical contact supplies the senor also with open contact and thus neutralizes the effects of the readiness delay. The resistance value for 230 VAC is: approx. 91 kΩ/1 W.
Reference value approx. 400 Ω/V

Series connected mechanical switches

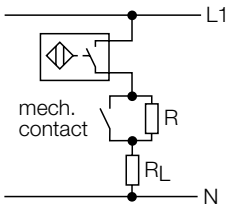

Parallel connected mechanical switches and AC/DC sensors

A closed contact cuts off the sensor power supply. When opening the contact again, the sensor is operable only after a readiness delay of t = 80 ms.

Solution: A resistor connected in series to the mechanical con-

tact ensures that the sensor is supplied with enough power. The readiness delay is thus avoided after opening the contact again.

Formula for calculating the resistance value: $R = 10\ V / I_{Load}$ $P = I^2_{Load} \times R$

Parallel connected mechanical switches

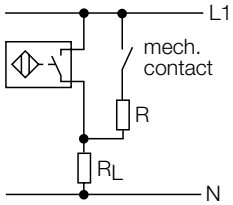

Sensors with analog output

Advantages

- Linear characteristic (except output type: SiU)
- Miniature design with enhanced range and non-linear output (SiU)
- Variable outputs: Current, voltage, frequency, adjustable switching output

Power supply

- Operating voltage U_B : 15…30 VDC
- Ripple W_{ss} : 10 %

Environmental conditions

- Protection class at least IP65
- Pollution degree 3
- Shock resistance: 30 x g (11 ms)
- Vibration resistance: 55 Hz (1 mm)

General data

- Repeatability R: < 1 %; R < 0.5 % After warm-up phase of 30 min
- Temperature drift: ≤ 0.06 % / °C
- Utilization category: 13
- Rated insulation voltage U_i = 0.5 kV

Load resistances

- Current output: < 0.4 kΩ
- Voltage output: ≥ 4.7 kΩ
- Frequency output: < 1 kΩ

Wiring diagram sensors with voltage and current output (example)

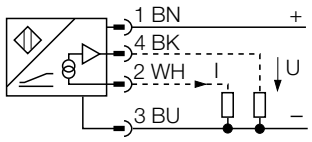

Output characteristic sensors with 0…10 V / 0…20 mA output (example)

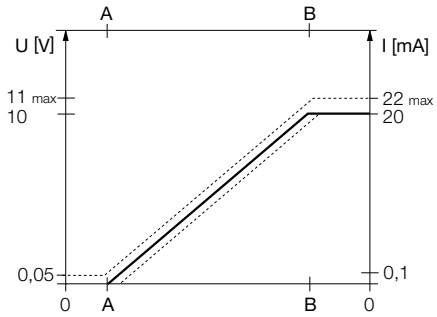

Output characteristic sensors with 2…10 V / 4…20 mA output (example)

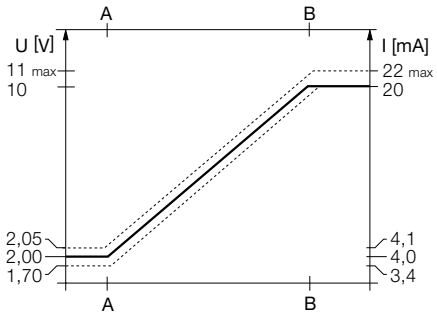

Digital SSI output

The high-precision SSI output transmits digital measured values either directly or via remote I/O fieldbus to the control unit without conversion losses. Gray 25 Bit is the preferred coding for the Li-Q25L sensor series. The coding is adjusted via control or via fieldbus module.

Standards and directives (if applicable)

Standards

EN 60947-5-2: 2007

Low-voltage switching devices, part 5: Control devices and switching elements, section 2: Proximity switch

EN 60079-0: 2009

Electrical equipment for explosion hazardous areas, general regulations

EN 60079-11: 2012

Electrical equipment for explosion hazardous areas; intrinsic safety „i“

EN 60079-15: 2010

Electrical equipment for explosion hazardous areas; Protection type „N“

EN 61241-0: 2006

General requirements on electrical equipment for use in areas susceptible to flammable dusts

EN 60079-31: 2009

Electrical equipment for use in areas exposed to dust; protected by housing

EN 61000-6-4: 2007

Electromagnetic compatibility (EMC); Generic emission standard

EN 61000-6-2: 2005

Electromagnetic compatibility (EMC); Generic standards, immunity for industrial environments

EN 60529 1991 +A1: 2000

Protection classes (IP-Code); housing protected against ingress of dust and moisture

EN 60947-5-6 (NAMUR): 2000

Control devices and proximity switches, DC current interface for proximity switches and switching amplifiers ((NAMUR)

EN 61508-1…7: 2010

Functional safety of safety-related electrical / electronic / programmable electronic systems

EN 61326-1

Laboratory equipment for electrical measuring, control, and regulating tasks; EMC requirements

Directives

2006/95/EC

Low voltage directive

2004/108/EC

Electromagnetic compatibility

94/9/EG

Explosion protection (ATEX)

CE

The CE-symbol is neither a seal of quality nor a test mark but serves for free trade within the European Community. Manufacturers assure that the protective aims of the applicable directives are fulfilled by CE- labelled products. With the CE symbol on products for sale, the manufacturer confirms that these products comply with the technical guidelines for operating safety and electromagnetic compatibility valid at the time of licensing.

Housing materials

ABS

ABS Acrylonitrile-Butadiene-Styrene
Impact resistant, stiff

AL

Al Aluminium
Low specific weight, good resistance to oxidation

CuZn-Cr

CuZn-Cr chrome-plated brass
Standard housing material

CuZn-OP

CuZn-OP brass, Optaloy-coated
Standard housing material

CuZn-T

CuZn-T brass, PTFE-coated, protection against weld splatter

DURO

DURO Duroplast

Very good mechanical stability, excellent thermostability

EPTR

EPTR thermoplastic rubber

Good mechanical stability, thermostability, resistance to chemicals

FEP

FEP Fluoropolymer
High thermostability, highly resistant to abrasion, resistant to acids, alkaline solutions, varnishes, benzine and oils

GD-Al

GD-Al die-cast aluminium
Low specific weight, good stability and durability

GD-Zn

GD-Zn die-cast zinc
Good stability and durability

LCP

LCP Liquid Cristal Polymers, liquid cristal Copolyester
High thermostability and resistance to chemicals, low thermal expansion, good chemical properties, flame retardant

PA

PA (Polyamide)
Wear-free, stiff, impact resistant, good thermostability

PA-T

PA-T polyamide, PTFE-coated, protection against weld splatter

PA-X

PA-X Polyamide, radiation cross-linked
Excellent mechanical stability, high thermostability, PA6/PA12 approved for the food industry

PBT

PBT Polybutylene terephthalate (thermoplastic polyester)
Rigid, stiff, solid, tough (even at low temperatures), good resistance to chemicals, flame retardant, self-extinguishing and UV resistant

PC

PC Polycarbonate
transparent, highly resistant to impacts, very stiff, solid, tough, good thermostability, flame retardant, self-extinguishing

PEEK

PEEK Polyethertetherketon
Good mechanical properties at high temperatures, high dimension stability and resistance to chemicals

POM

POM Polyoxymethylene
Highly resistant to impacts, good mechanical stability, good resistant to chemicals

PP

PP Polypropylene
Excellent resistance to chemicals, even to acids, alkalis and solvents, high thermostability, high mechanical stability

PTFE

PTFE Polytetrafluorethylene;
Highly thermostable and chemical-resistant plastic

PUR

PUR Polyurethane
Elastic, wear-free, impact resistant, good resistance to oils, lubricants and solvents

Housing materials

PVC

PVC Polyvinyl chloride
Good mechanical stability, resistance to impact, resistance to chemicals

PVDF

PVDF Polyvinylidene fluoride
High thermostability, good resistance to chemicals (similar to PTFE), high mechanical stability

SrFe

SrFe strontium ferrite
In terms of hardness and brittleness similar to ceramic material, weather-proof and good resistance chemicals

Trogamid

Trogamid Polyamide (transparent)
Transparent, hard, stiff, good resistance to chemicals

ULTEM (PEI)

PEI Polyetherimide
Highly rugged, stiff and hard, high thermostability, operates in a broad temperature range, good resistance to high-energy radiation, flame retardant and self-extinguishing, transparent and UV resistant

V4A

VA high-quality stainless steel
V4A denotes a certain type of steel and stands for the CrNiMo steels with the material grade numbers 1.4401 (AISI 316), 1.4571 (AISI 316Ti) and 1.4404 (AISI 316L)

VA

VA high-quality stainless steel
Corrosion and acid-resistant steel, highly stable for higher demands – also suitable for the food industry

VA-T

VA-T stainless steel, PTFE-coated, protection against weld splatter

VES

VES Vestamide (PA)
Good mechanical stability, excellent temperature stability

Hans Turck GmbH & Co. KG ▪ Tel. +49 (208) 49 52-0 ▪ Fax +49 (208) 49 52-264

Connection cables for sensors

FEP sheath with FEP insulated core

FEP sheath with FEP insulated core
Suitable for very low temperatures, -100…+180 °C
Identifier: …/S939 (-60 °C)

PTFE sheath with PTFE-insulated core

PTFE sheath with PTFE-insulated core
Excellent thermostability and resistance to chemicals
Identifier:
…/S120 (+120 °C)
…/S907 (+160 °C)
…/S200 (+200 °C)

PUR sheath with PVC-insulated core

PUR sheath with PVC-insulated core
Resistant to all industrial oils and lubricants, extra fine strands, thus highly stable under vibration and torsional stress, small bending radius
Identifier: …/S90

PVC sheath with PVC-insulated core

PVC sheath with PVC-insulated core
Standard quality, extra fine strands, highly flexible (LifYY)

Silicone sheath with silicone-insulated core

Silicone sheath with silicone-insulated core
For high and low temperatures (-50…+180 °C), moderate mechanical stability, average resistance to alkaline solutions, acids, oils and solvents
Identifier:
…/S140 or …/S120 (+120 °C)
SiHSi, 2 x 0.5 mm^2 , 16 x 0.2
SiHSi, 3 x 0.5 mm^2 , 16 x 0.2
SiHSi, 3 x 0.25 mm^2 , 14 x 0.15

TPE sheath with TPE-insulated core

TPE sheath with TPE-insulated core
Good thermostability and resistance to chemicals (-40…+130 °C)
Identifier: …EG08…/S100

Ölflex-PUR sheath PVC-insulated core

Ölflex-PUR sheath with PVC-insulated core
Good resistance to oil, highly resistant to abrasion and grinding, cut-resistant, resistant to microbes and hydrolysis, temperature range -5…+70 °C
Identifier: …/S396 (underwater)

Wiring diagrams

w001

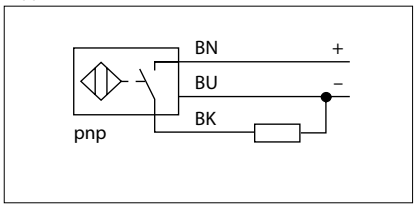

w002

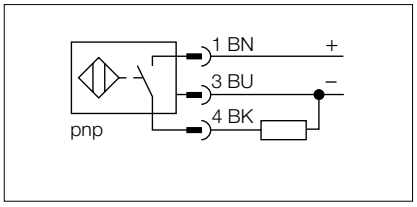

w003

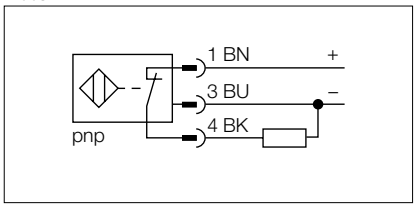

w004

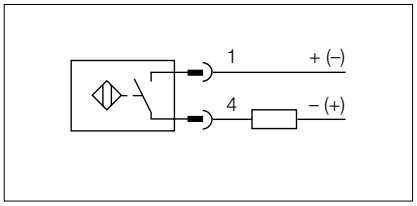

w005

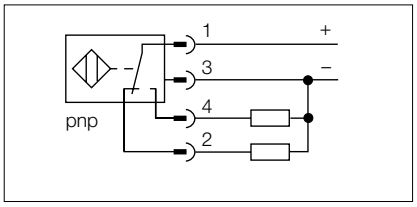

w006

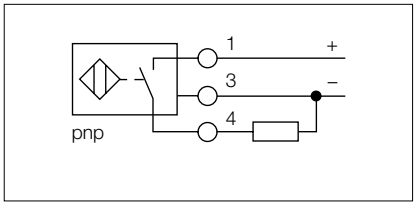

w007

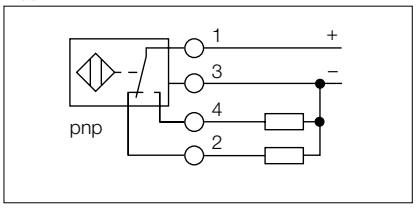

w008

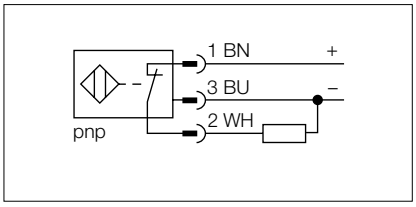

w009

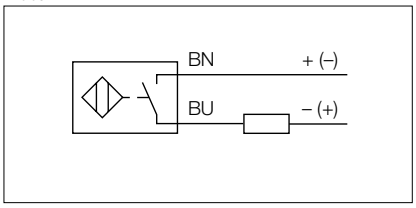

w010

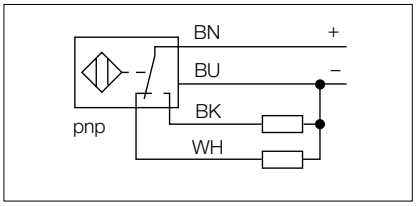

w011

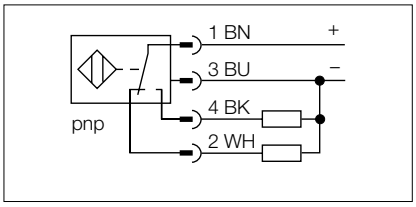

w012

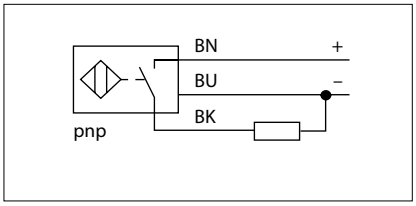

w013

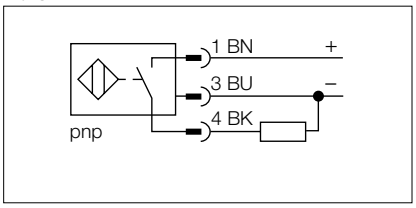

w014

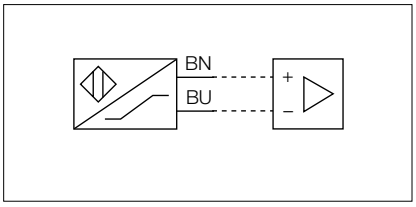

w015

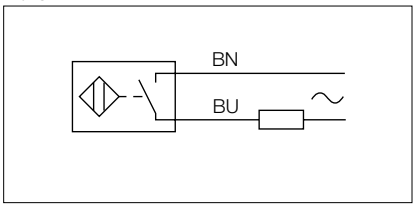

w016

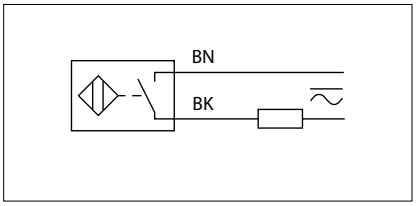

w017

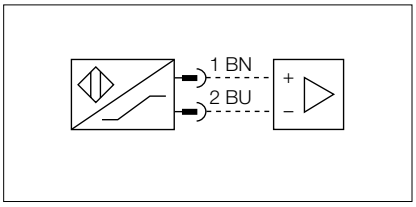

w018

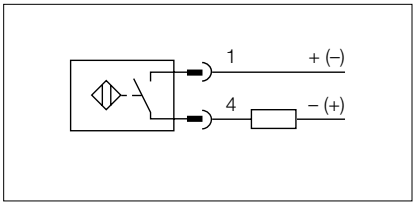

iagrams

w019

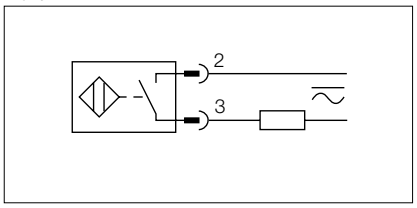

w020

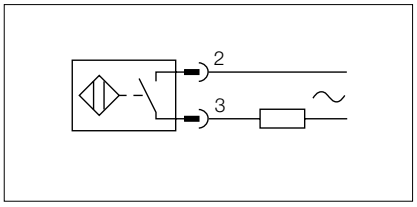

w021

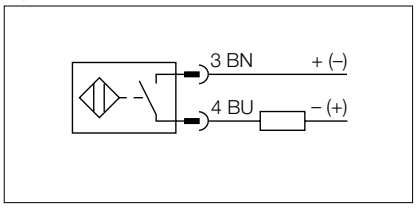

w022

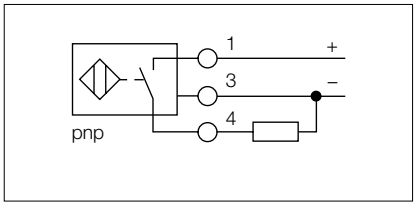

w023

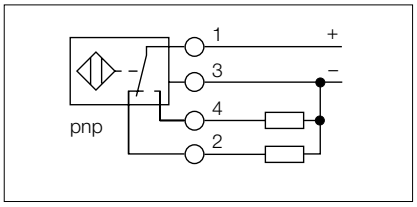

w024

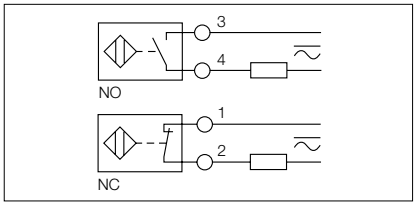

w025

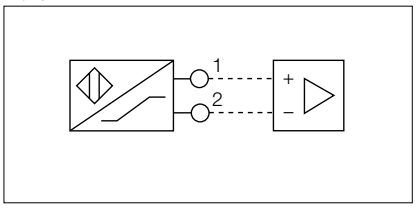

w026

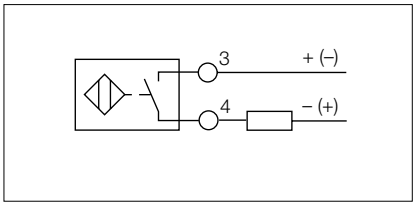

w027

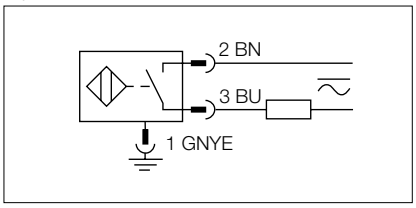

w028

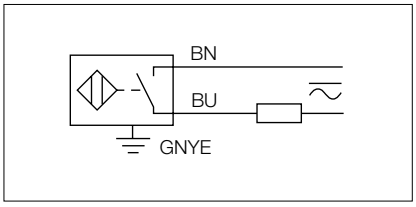

w029

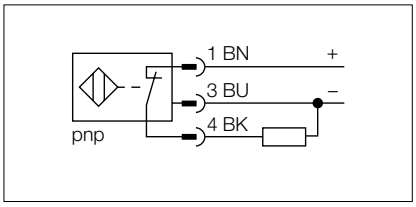

w030

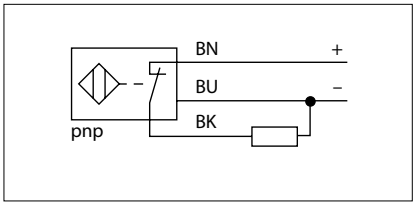

w031

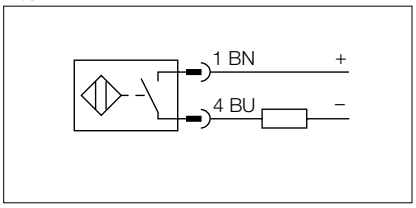

w032

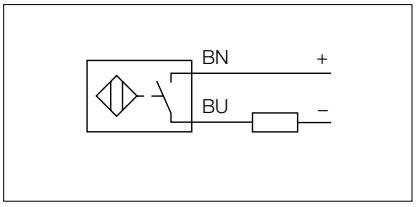

w033

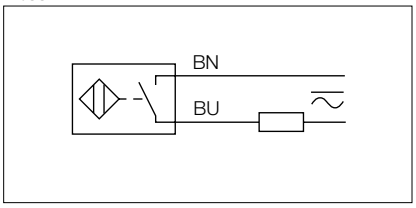

w034

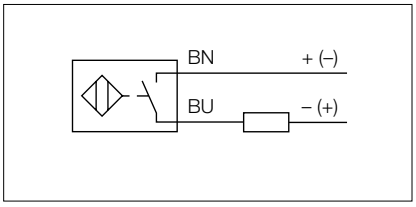

w035

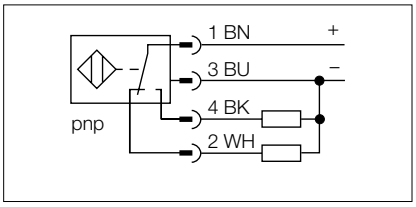

w036

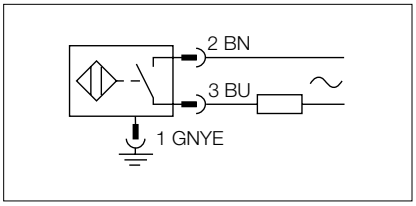

Wiring diagrams

w037

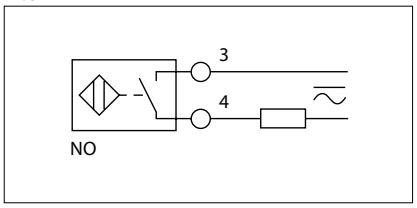

w038

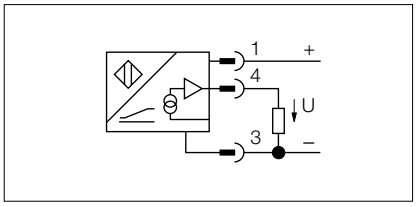

w039

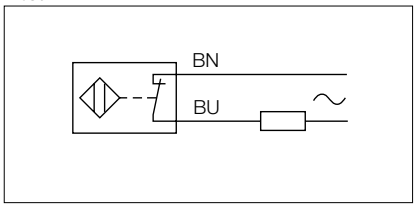

w040

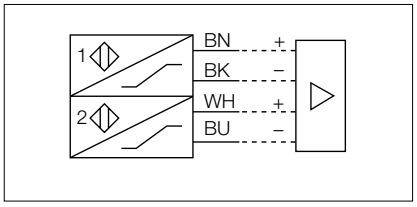

w041

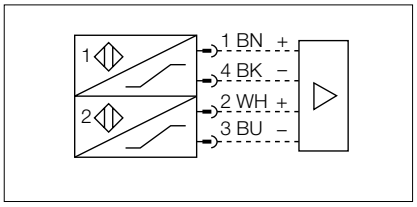

w042

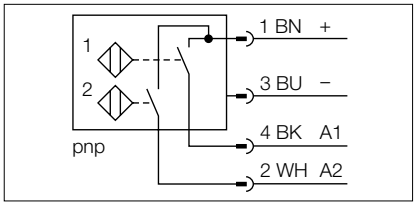

w043

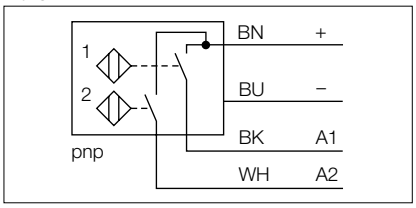

w044

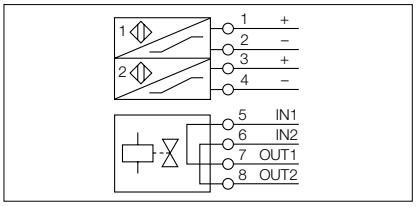

w045

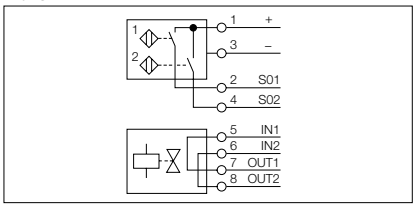

w046

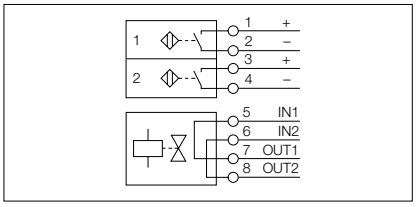

w047

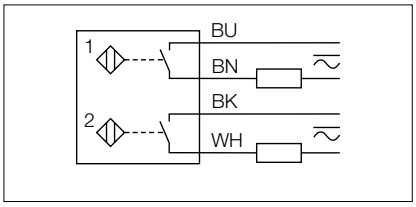

w048

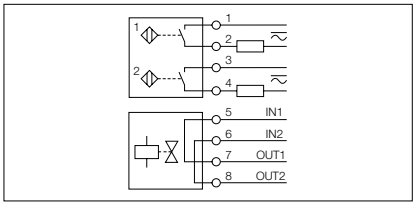

w049

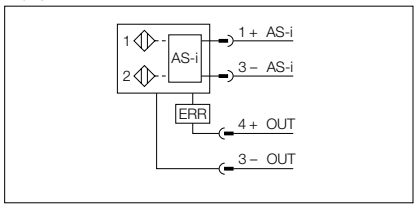

w050

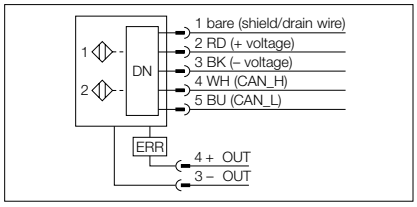

w051

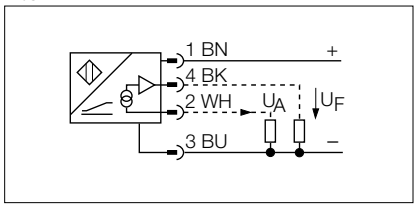

w052

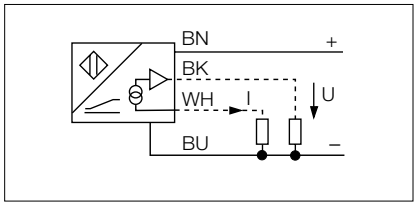

w053

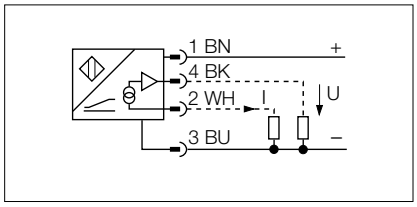

w054

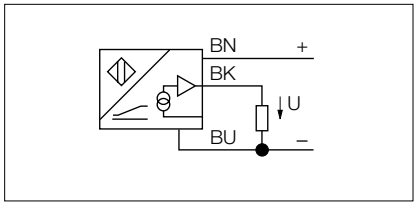

iagrams

w055

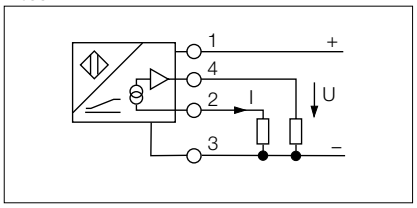

w056

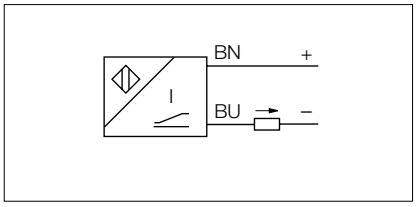

w057

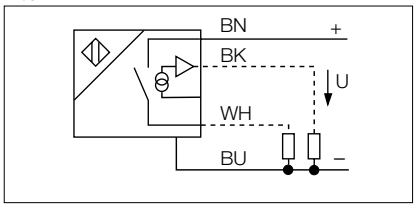

w058

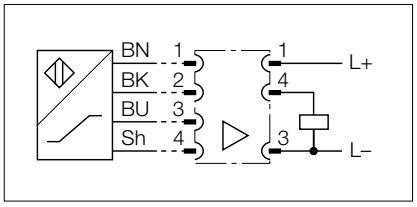

w059

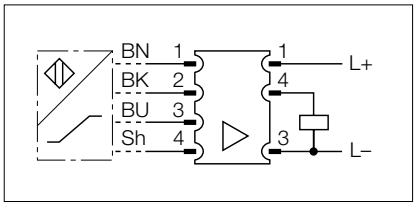

w060

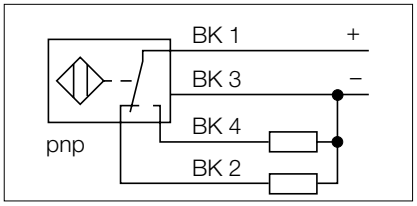

w061

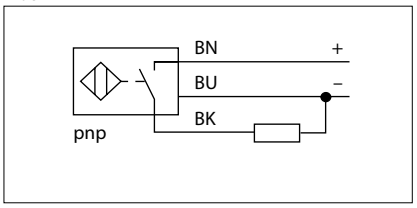

w062

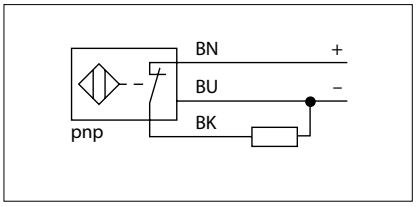

w063

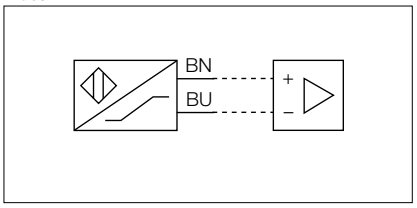

w064

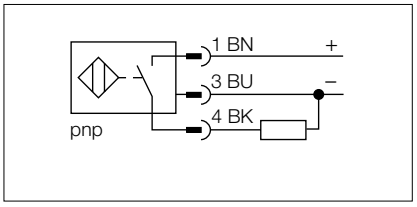

w065

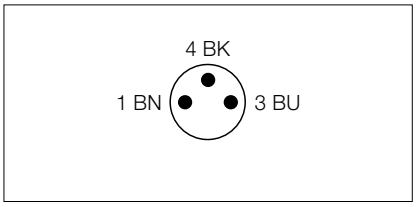

w066

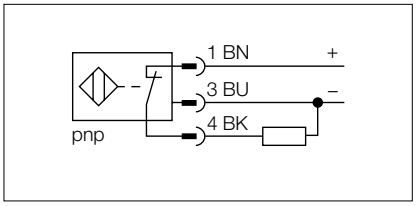

w067

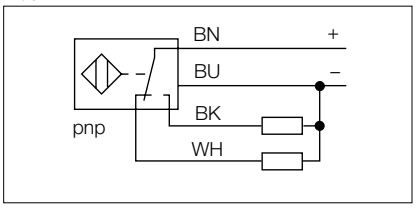

w068

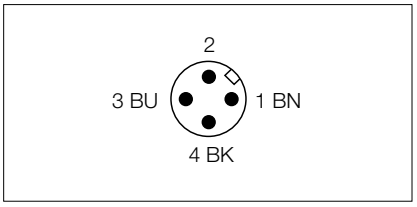

w069

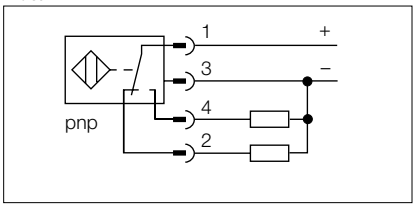

w070

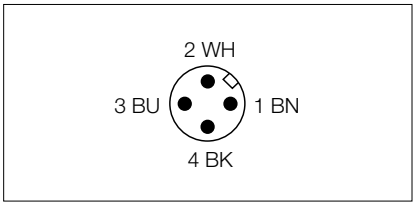

w071

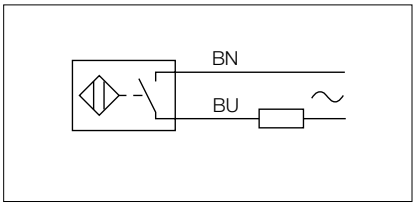

w072

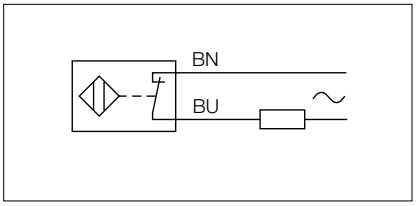

Wiring diagrams

w073

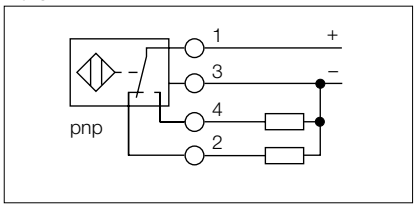

w074

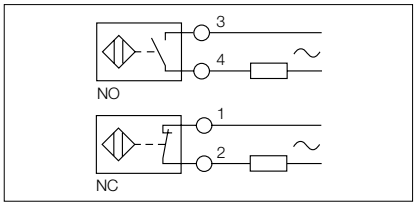

w075

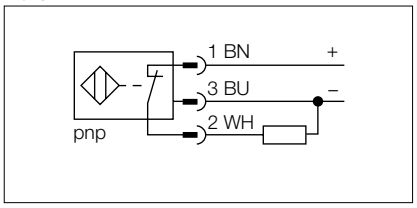

w076

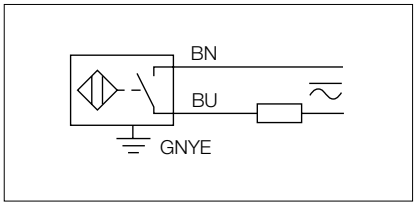

w077

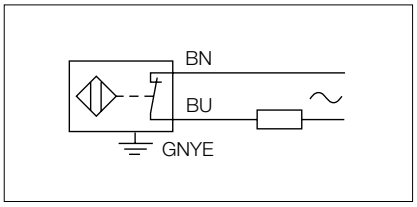

w078

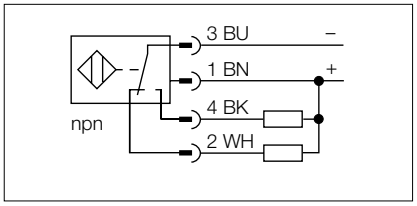

w079

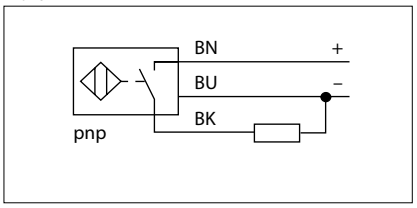

w080

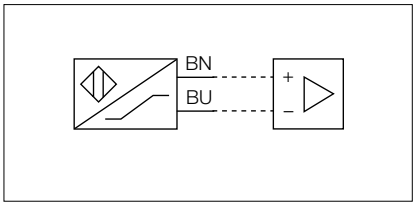

w081

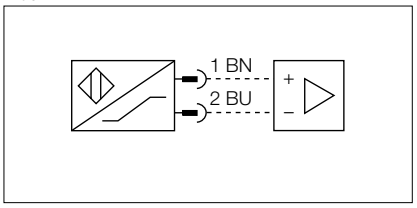

w082

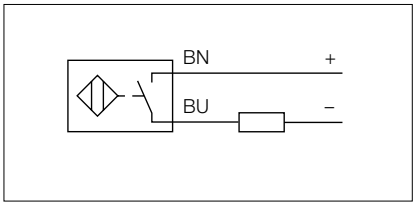

w083

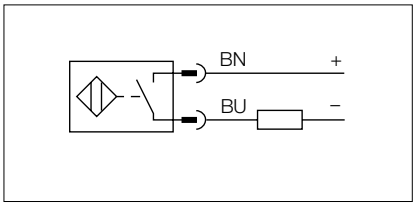

w084

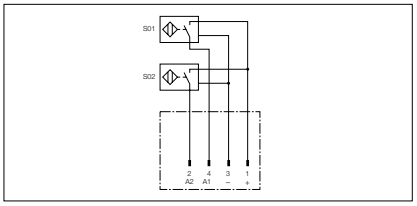

w085

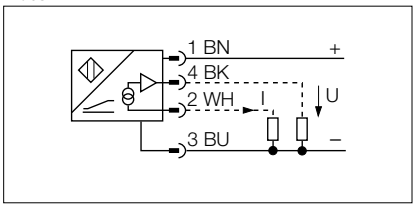

w086

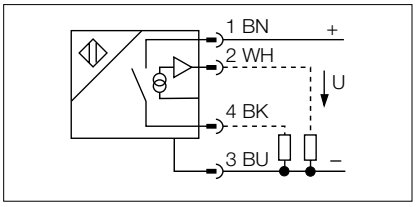

w087

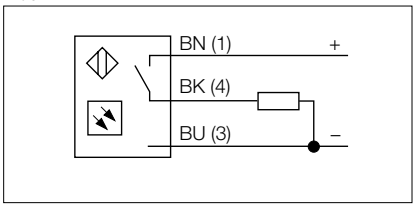

w088

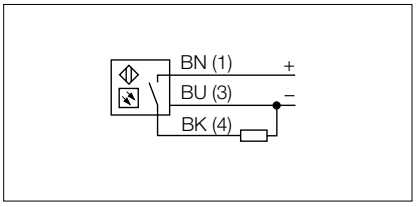

w089

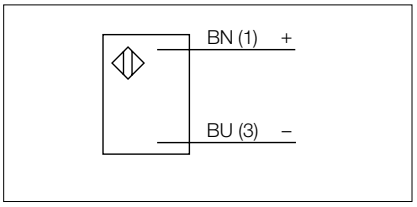

w090

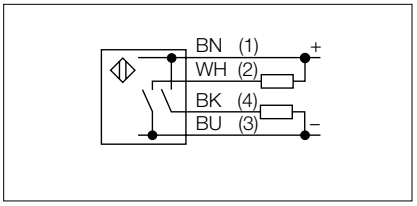

iagrams

w091

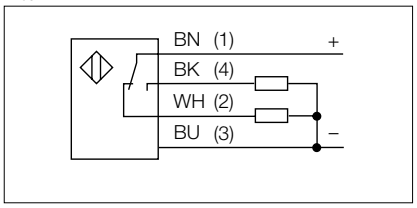

w092

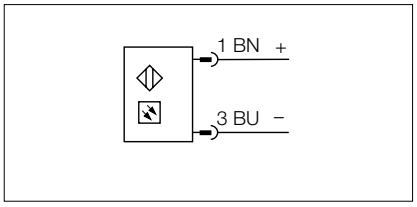

w093

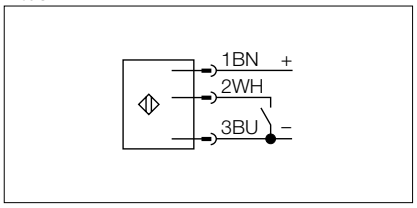

w094

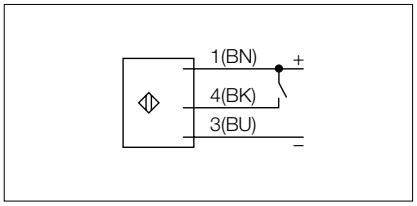

w095

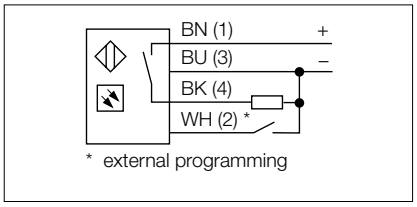

w096

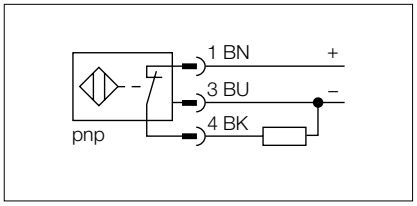

w097

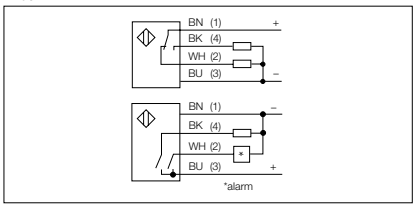

w098

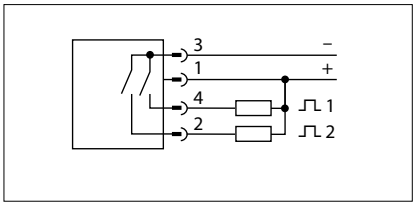

w099

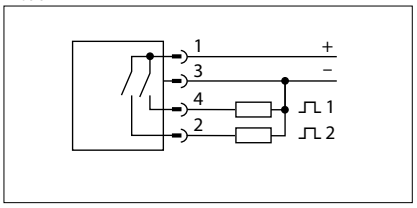

w100

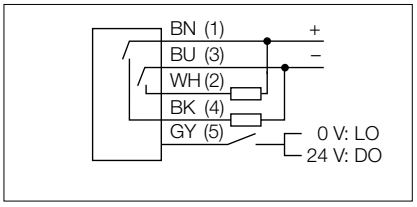

w101

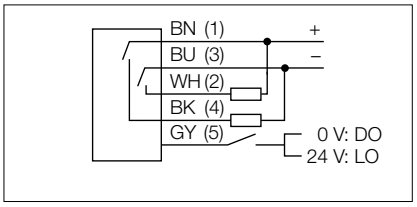

w102

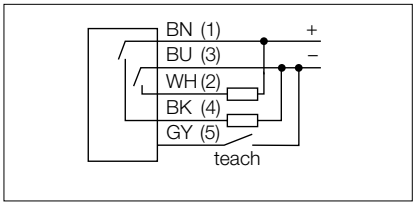

w103

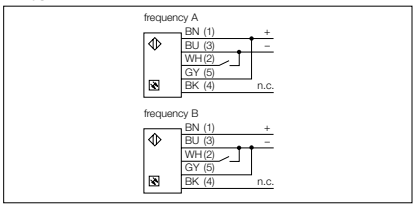

w104

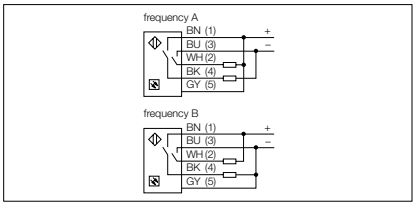

w105

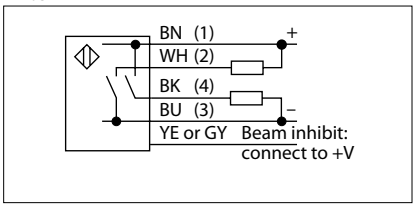

w106

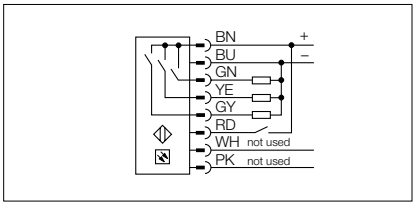

w107

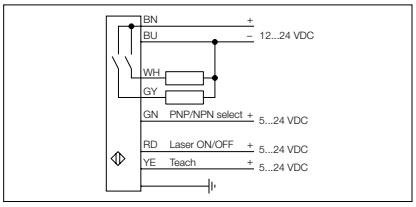

w108

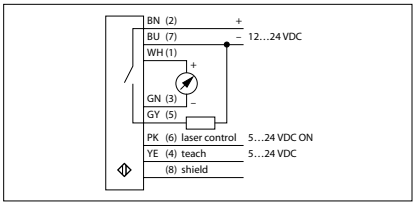

Wiring diagrams

Wiring diagrams

w109

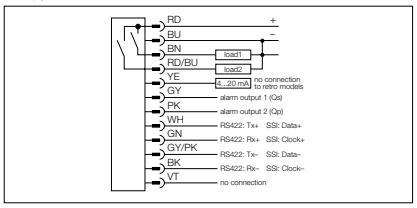

w110

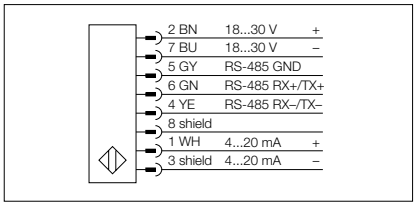

w111

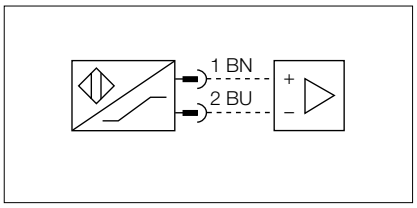

w112

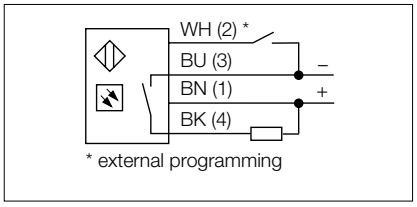

w113

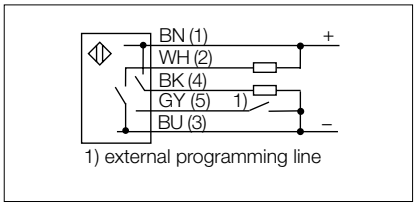

w114

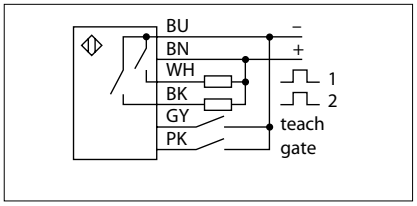

w115

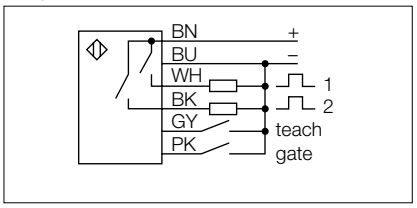

w116

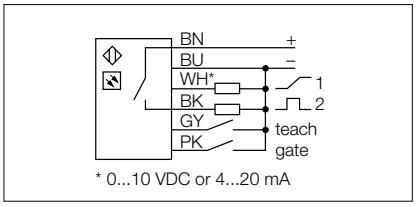

w117

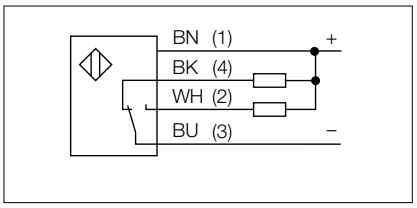

w118

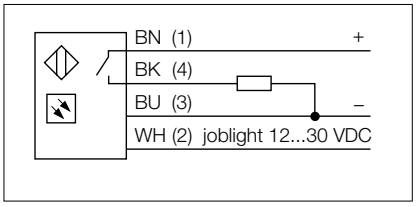

w119

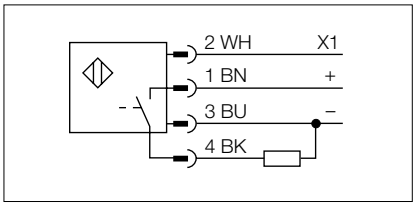

w120

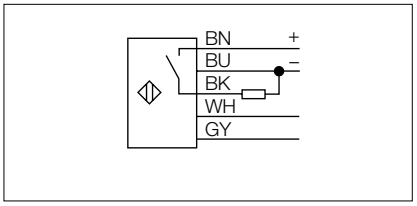

w121

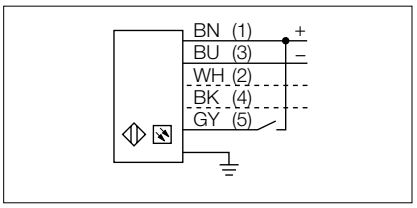

w122

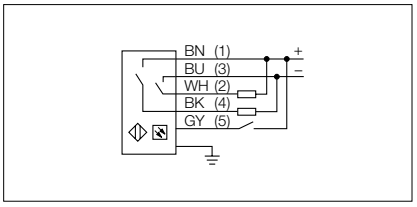

w123

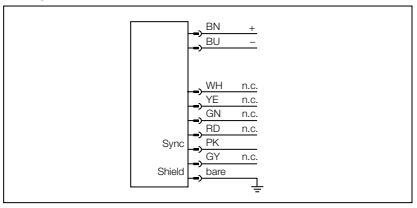

w124

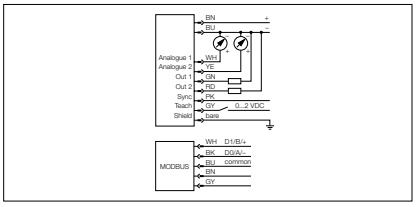

w125

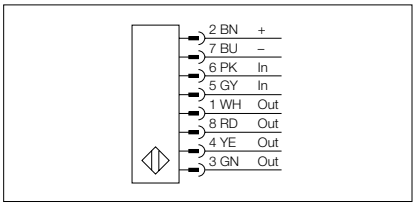

w126

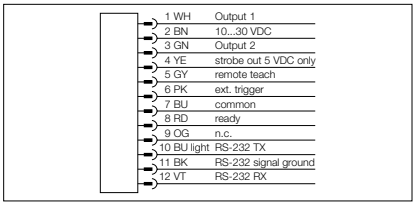

Hans Turck GmbH & Co. KG ▪ Tel. +49 208 49 52-0 ▪ Fax +49 208 49 52-264

iagrams

w127

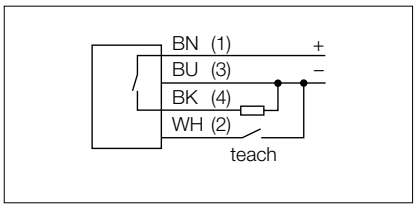

w128

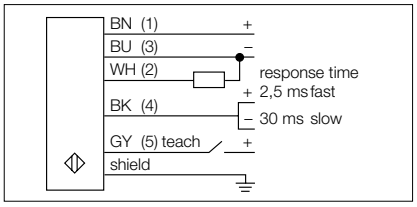

w129

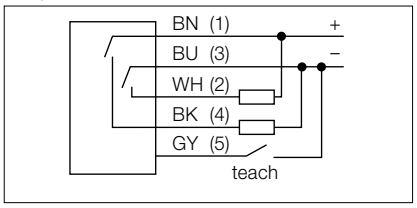

w130

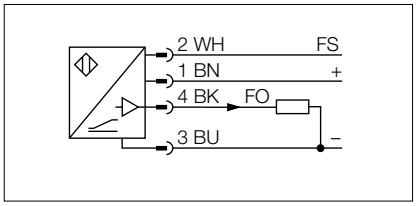

w131

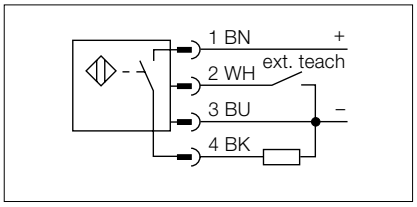

w132

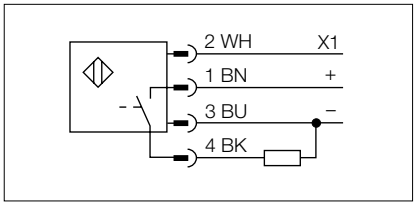

w133

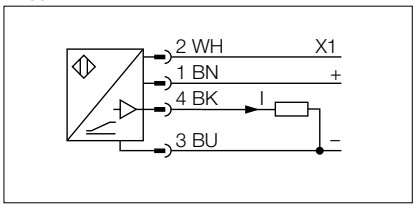

w134

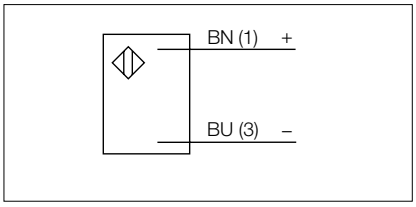

w135

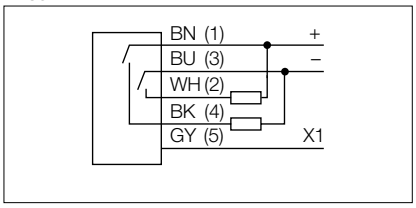

w136

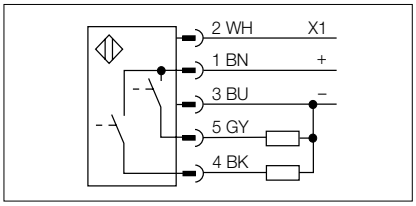

w137

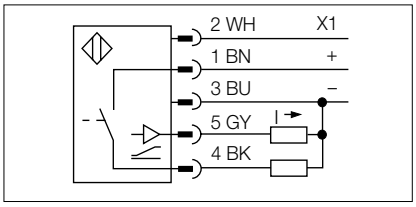

w138

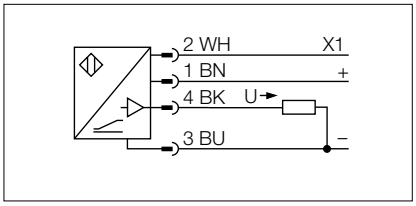

w139

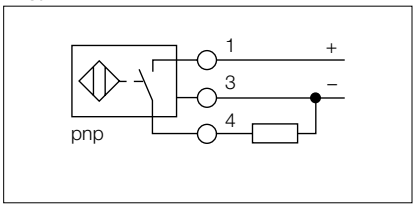

w140

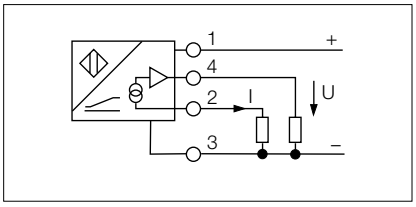

w141

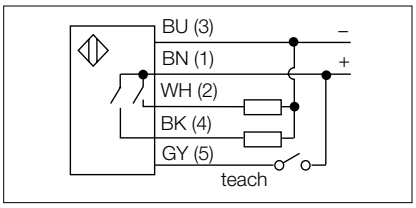

w142

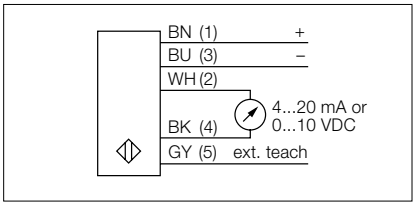

w143

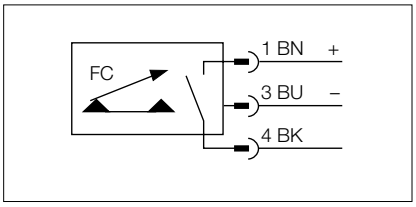

w144

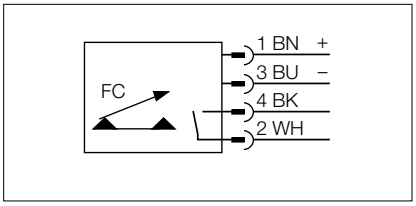

Wiring diagrams

w145

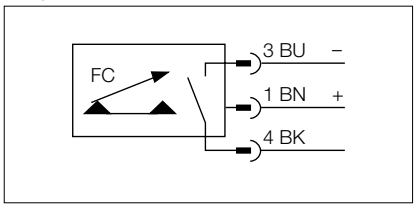

w146

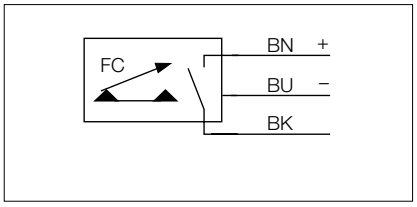

w147

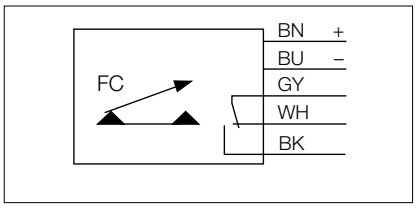

w148

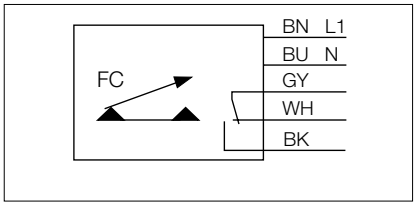

w149

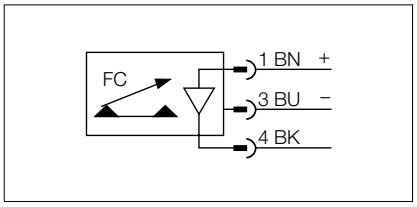

w150

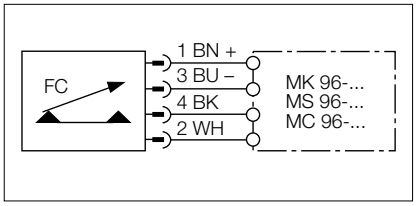

w151

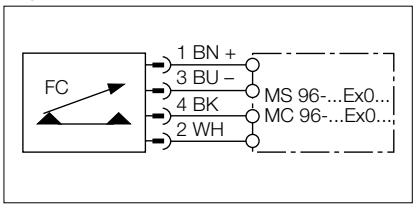

w152

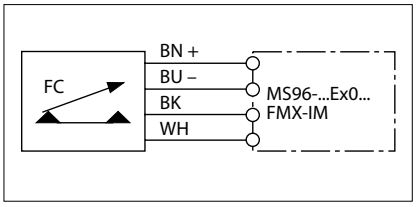

w153

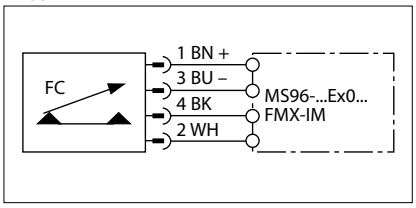

w154

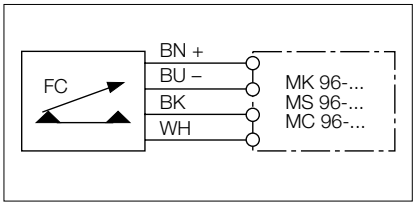

w155

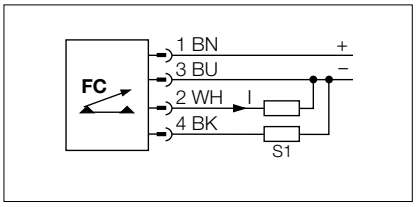

w156

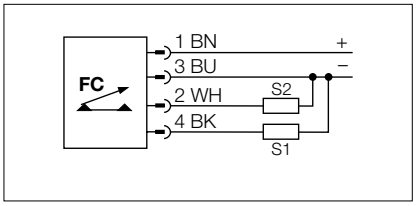

w157

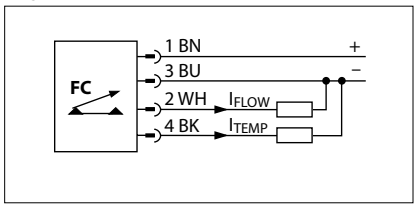

w158

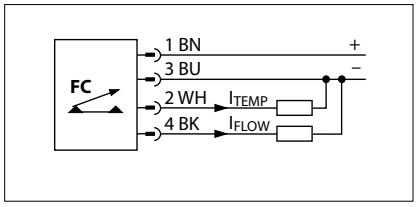

w159

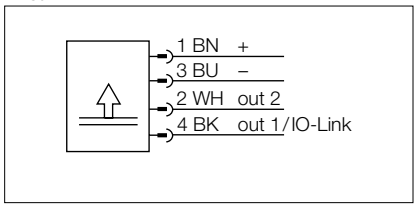

w160

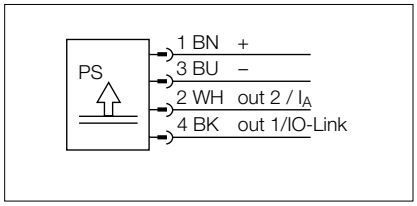

w161

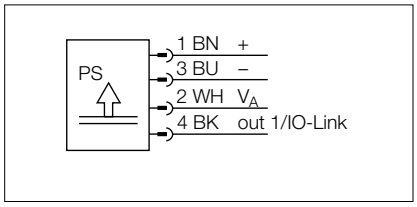

w162

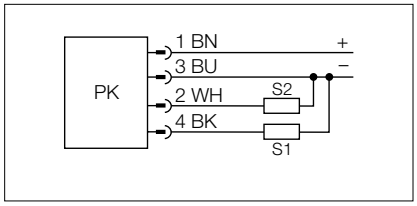

iagrams

w163

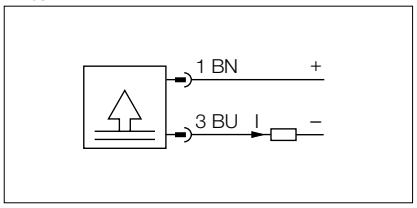

w164

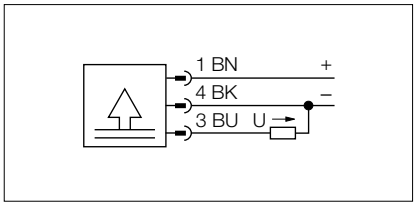

w165

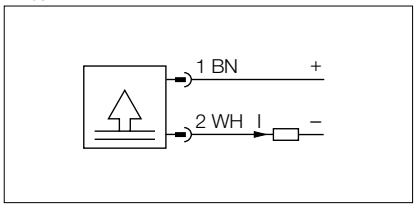

w166

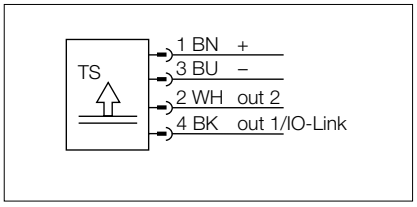

w167

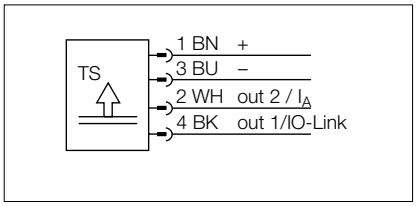

w168

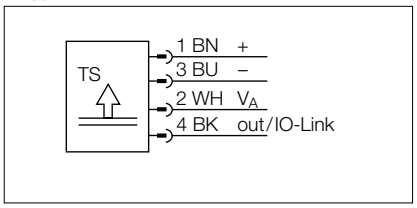

w169

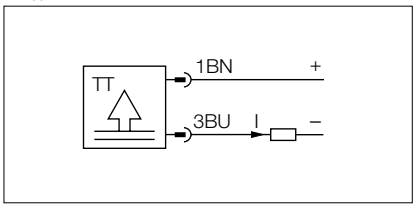

w170

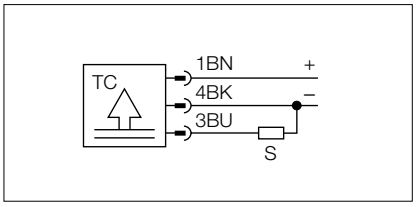

w171

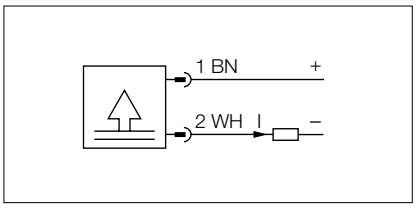

w172

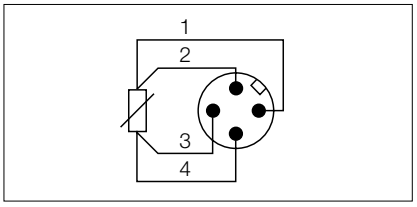

w173

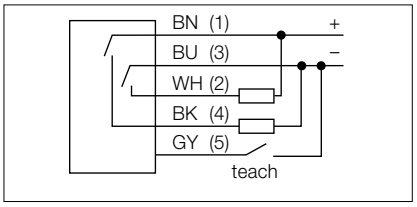

w174

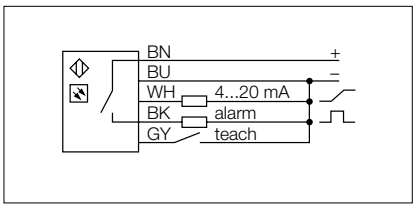

w175

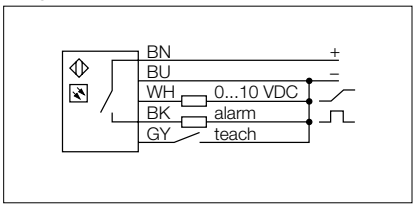

w176

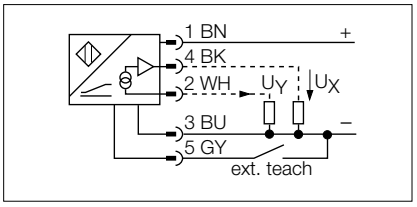

w177

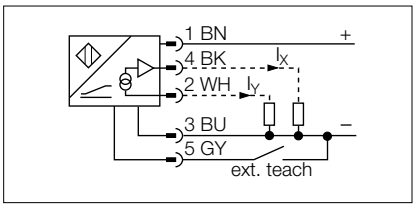

w178

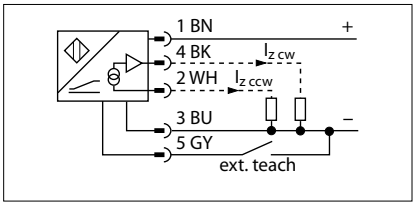

w179

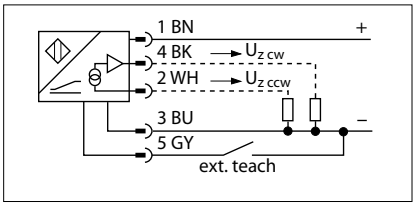

w180

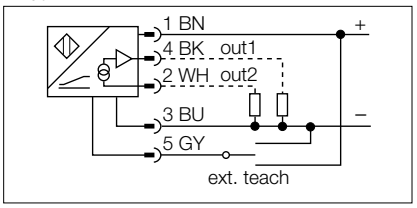

Wiring diagrams

w181

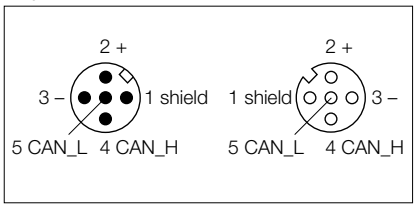

w182

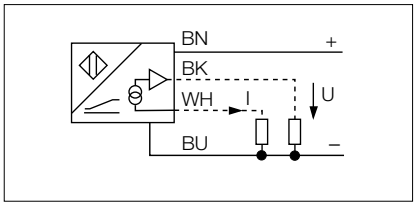

w183

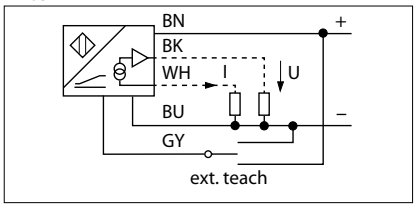

w184

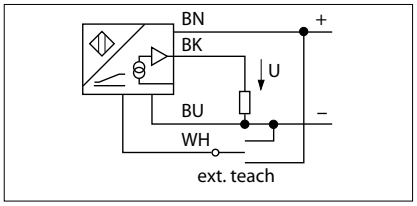

w185

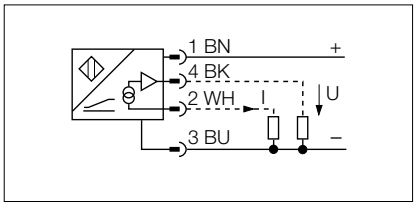

w186

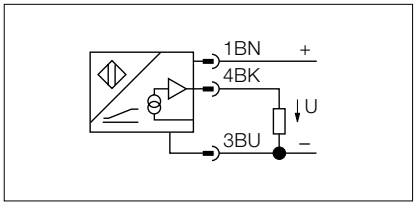

w187

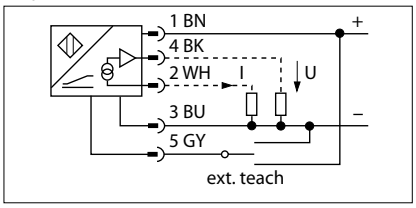

w188

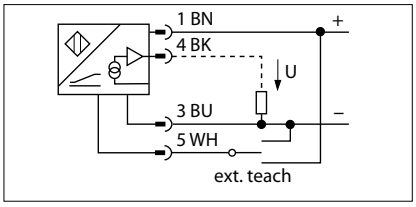

w189

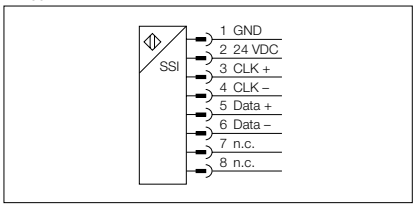

w190

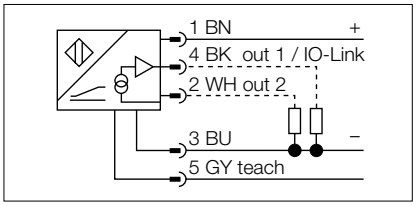

w191

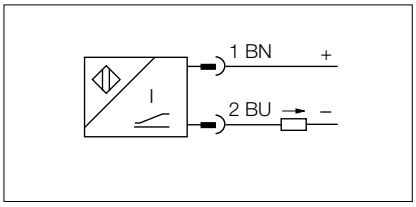

w192

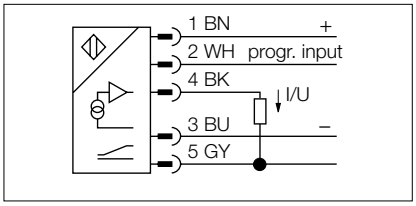

w193

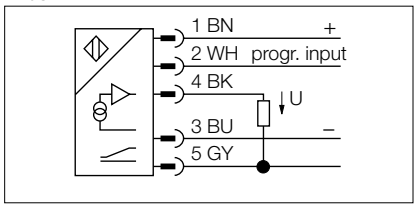

w194

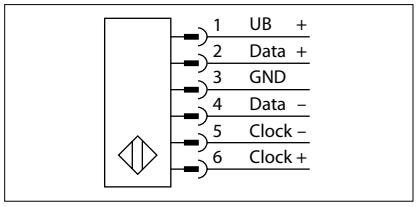

w195

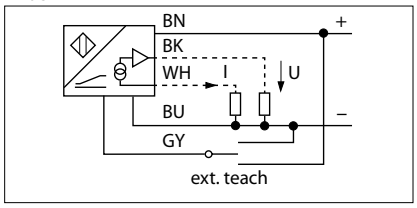

w196

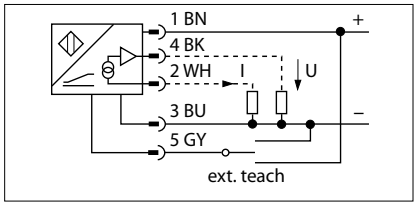

w197

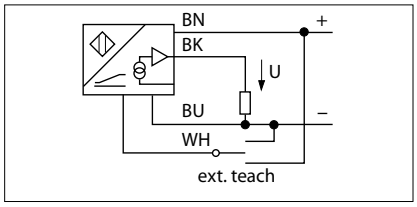

w198

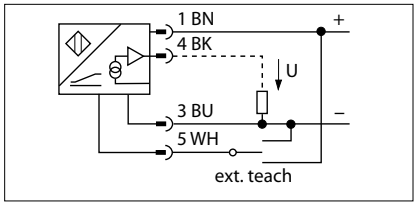

iagrams

w199

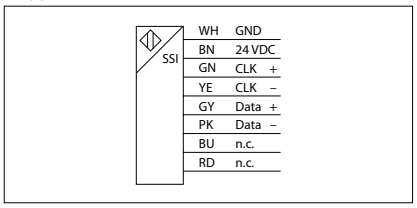

w200

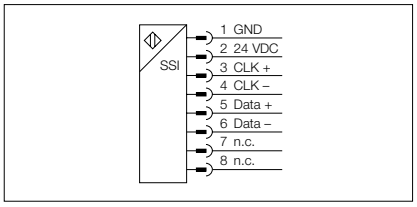

w201

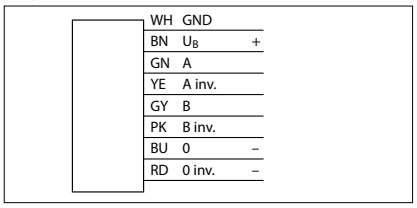

w202

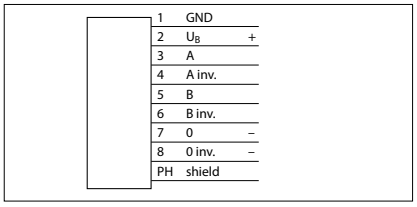

w203

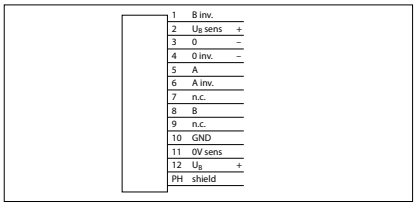

w204

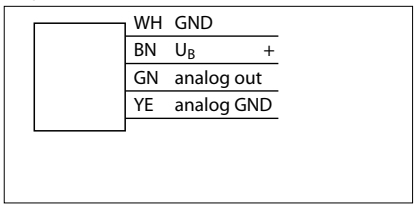

w205

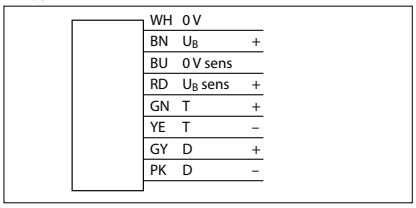

w206

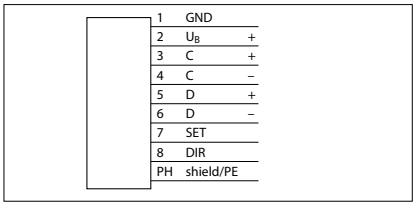

w207

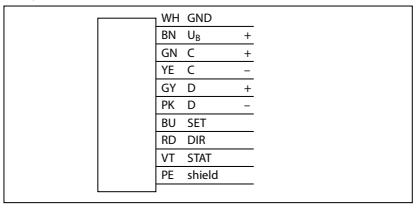

w208

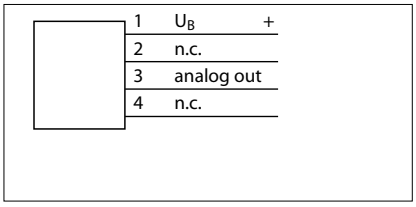

w209

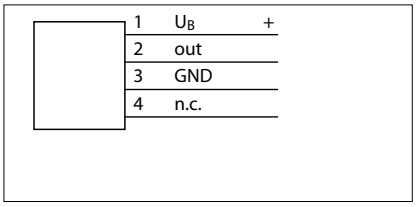

w210

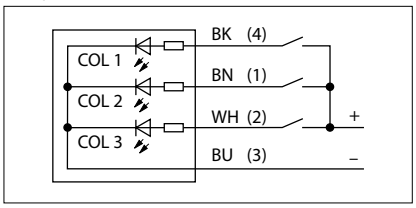

w211

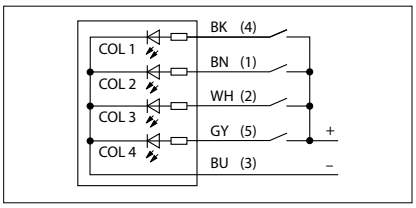

w212

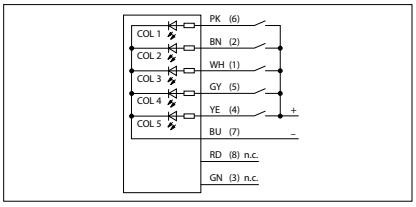

w213

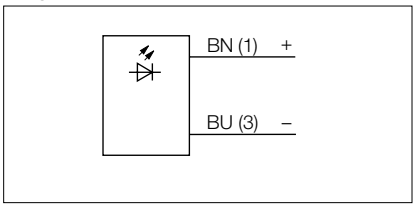

w214

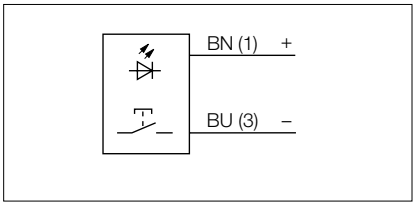

w215

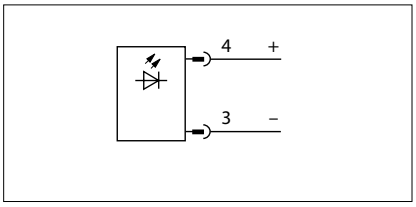

Dimension drawings

d001

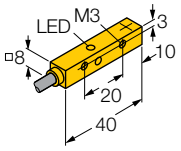

d004

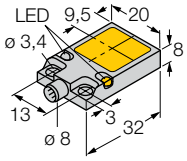

d007

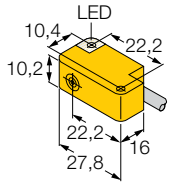

d002

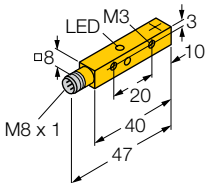

d005

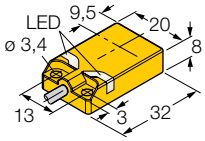

d008

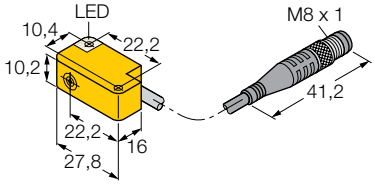

d003

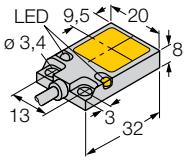

d006

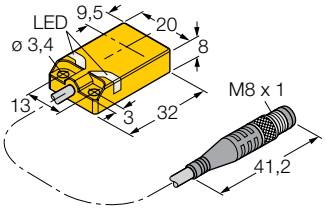

d009

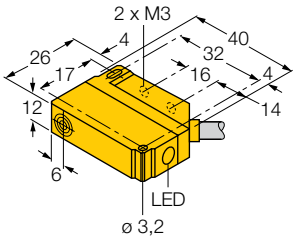

Hans Turck GmbH & Co. KG ▪ Tel. +49 208 49 52-0 ▪ Fax +49 208 49 52-264

gs in drawings

d010

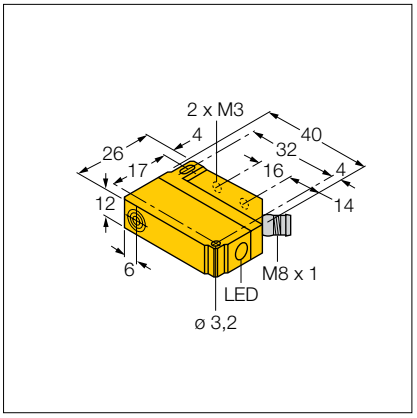

d013

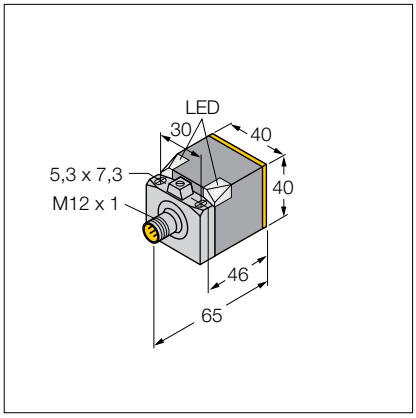

d016

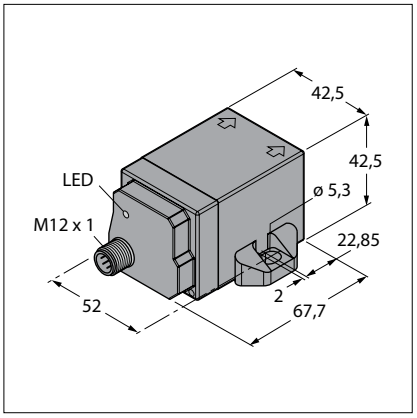

d011

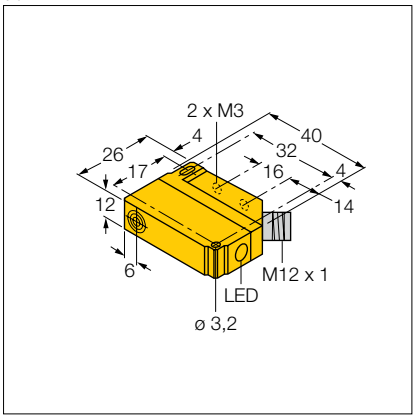

d014

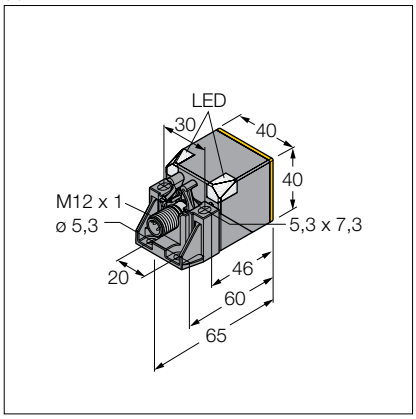

d017

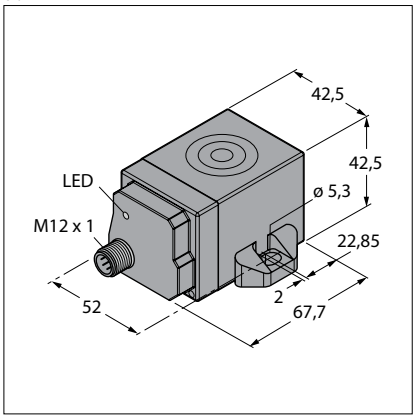

d012

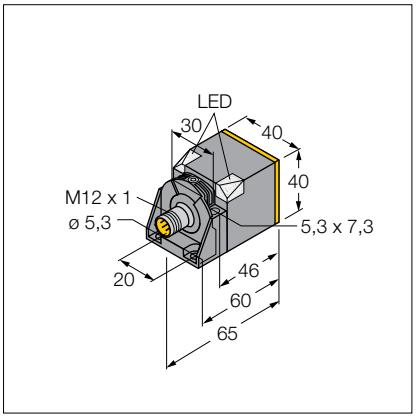

d015

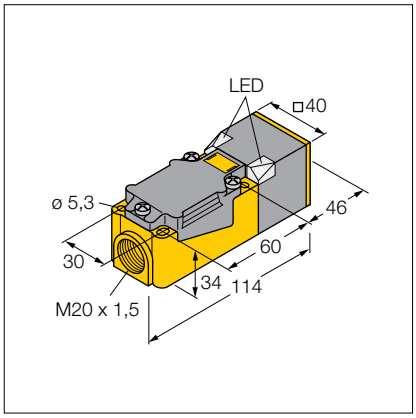

d018

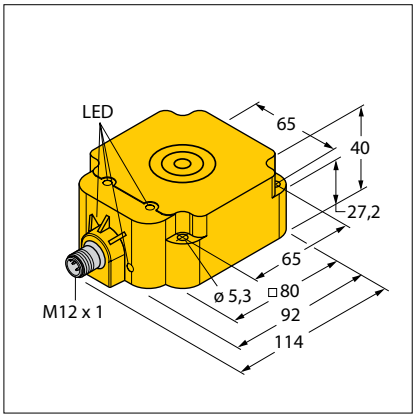

Dimension drawings

d019

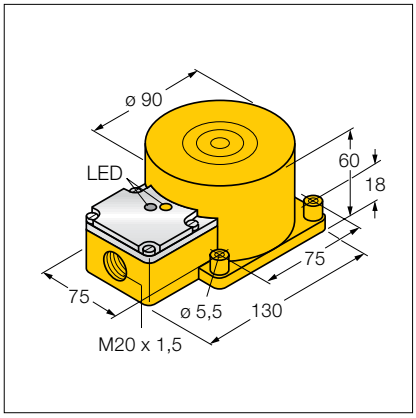

d022

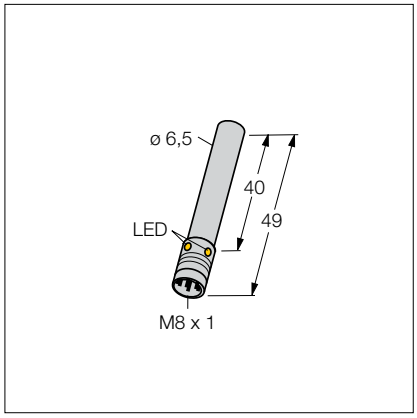

d025

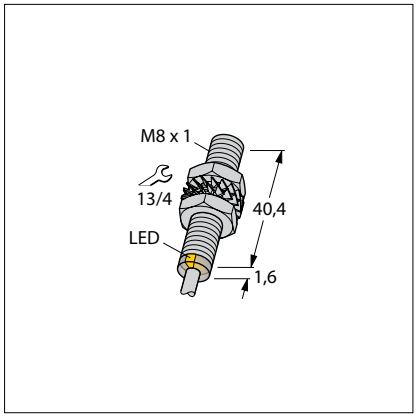

d020

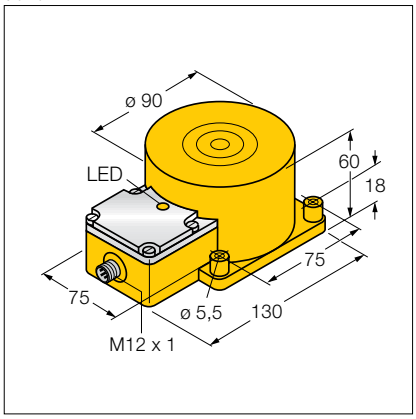

d023

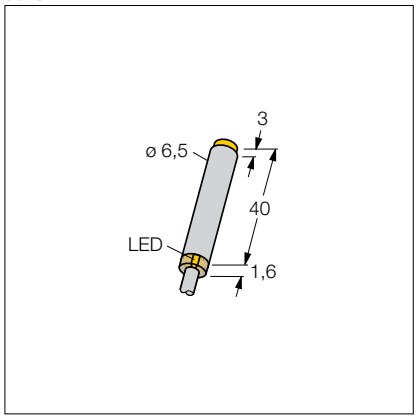

d026

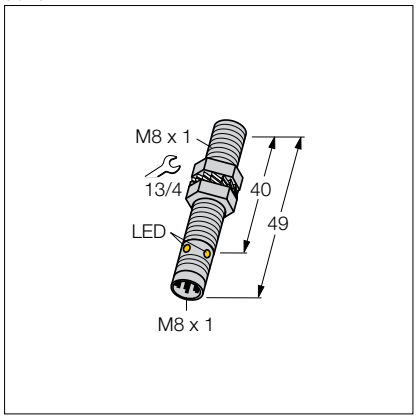

d021

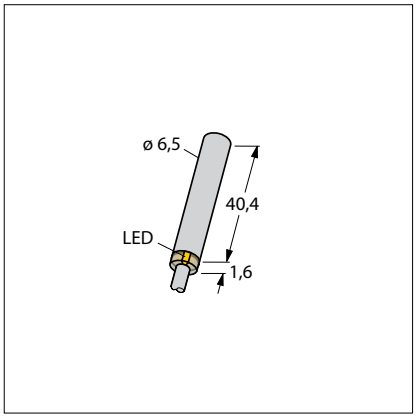

d024

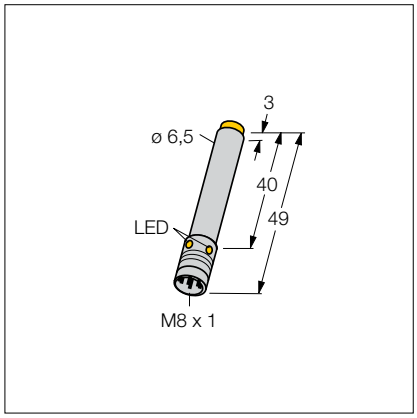

d027

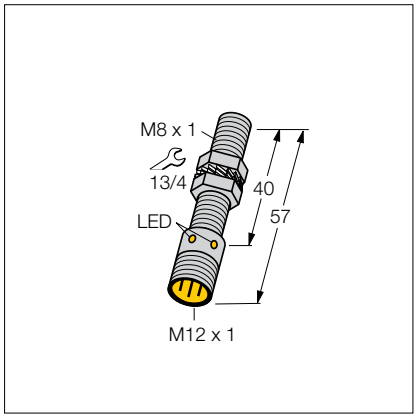

Hans Turck GmbH & Co. KG ▪ Tel. +49 208 49 52-0 ▪ Fax +49 208 49 52-264

gs in drawings

d028

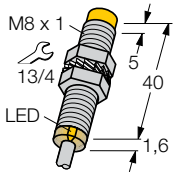

d031

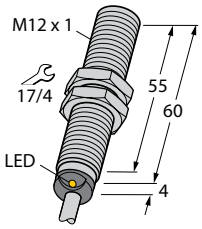

d034

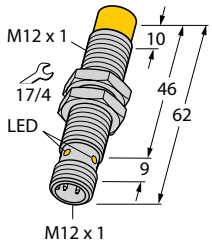

d029

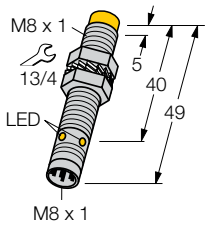

d032

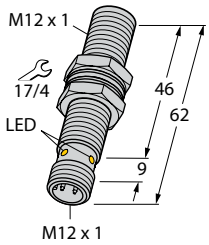

d035

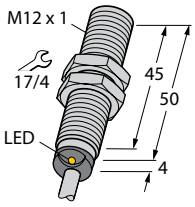

d030

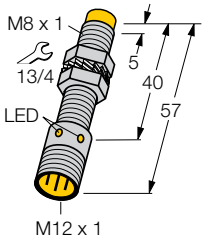

d033

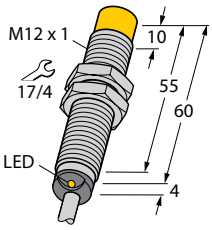

d036

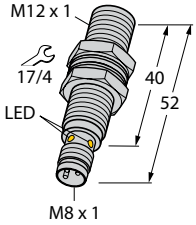

Dimension drawings

d037

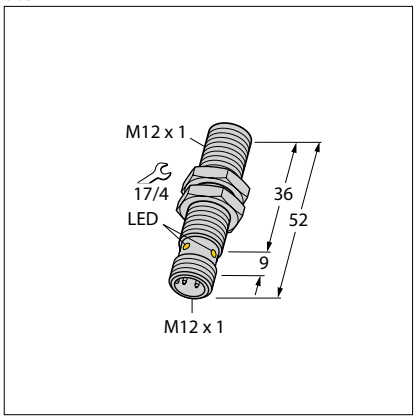

d040

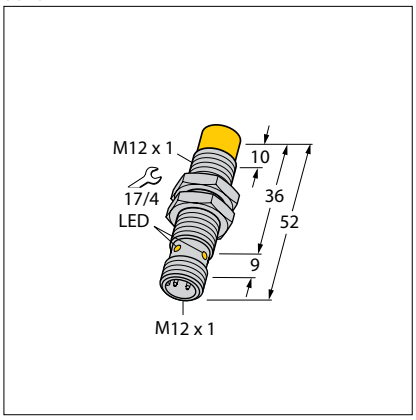

d043

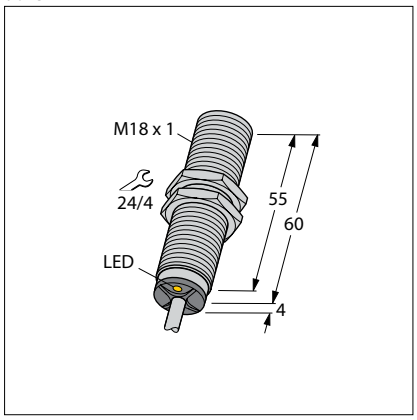

d038

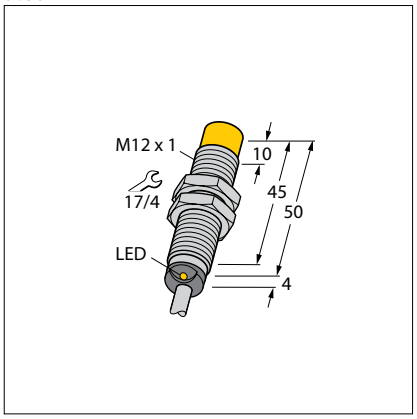

d041

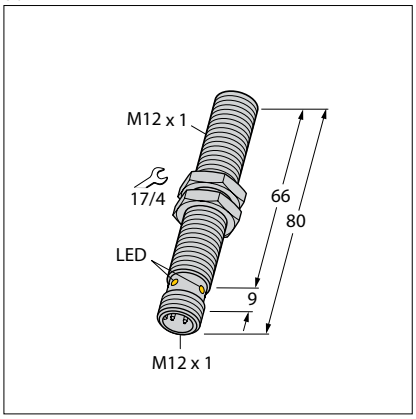

d044

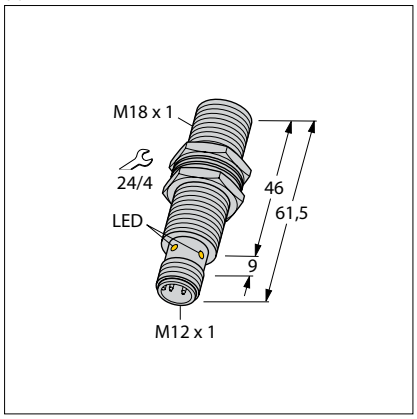

d039

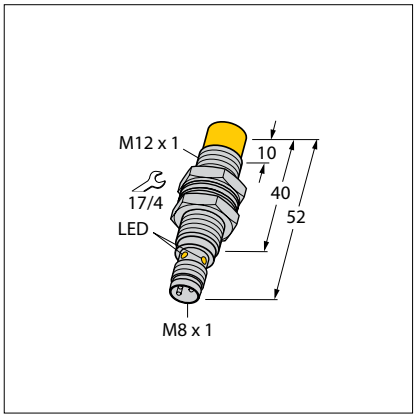

d042

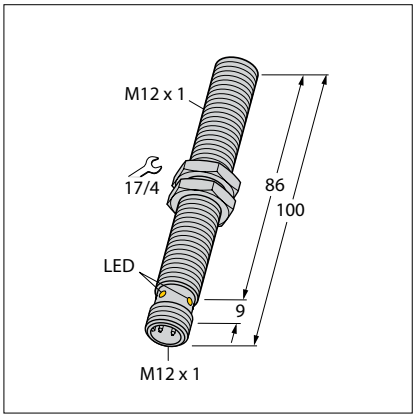

d045

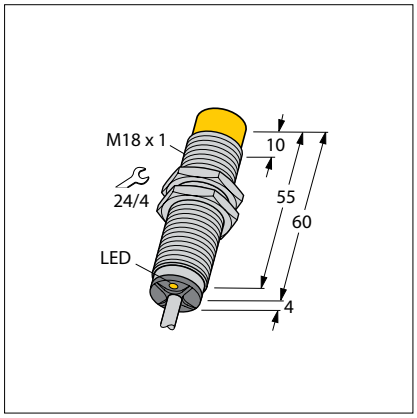

Hans Turck GmbH & Co. KG ▪ Tel. +49 208 49 52-0 ▪ Fax +49 208 49 52-264

gs in drawings

d046

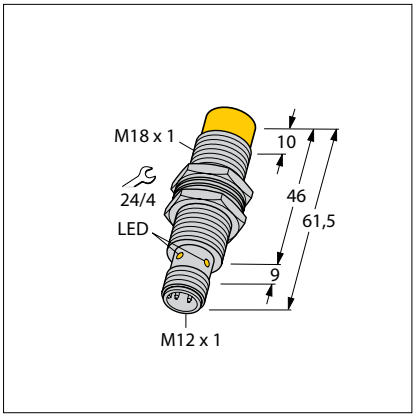

d049

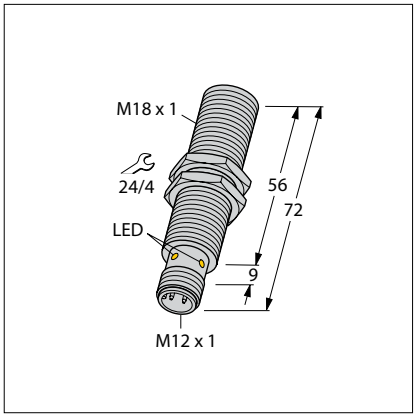

d052

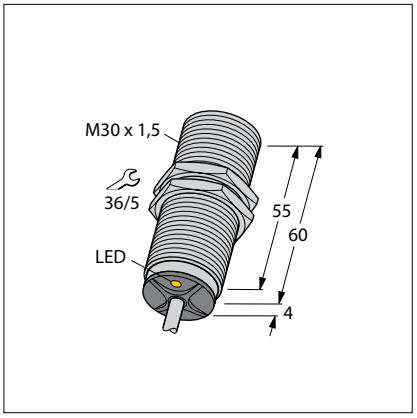

d047

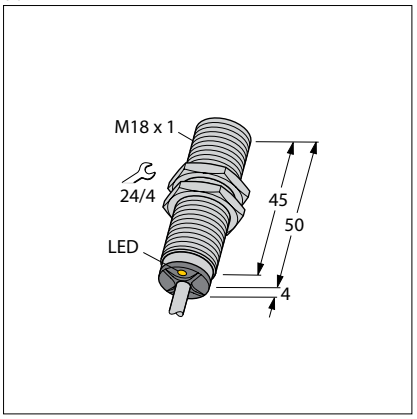

d050

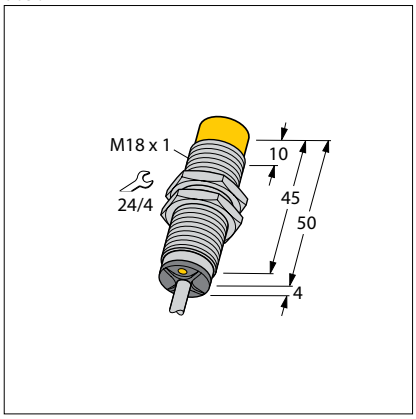

d053

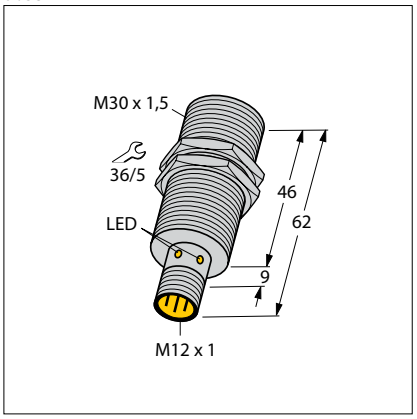

d048

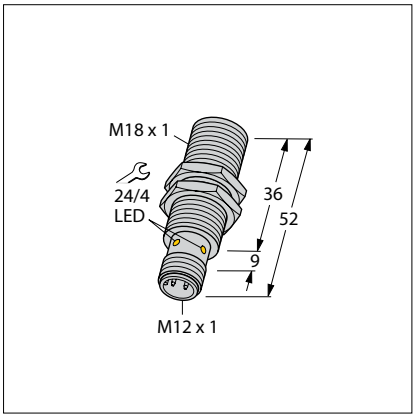

d051

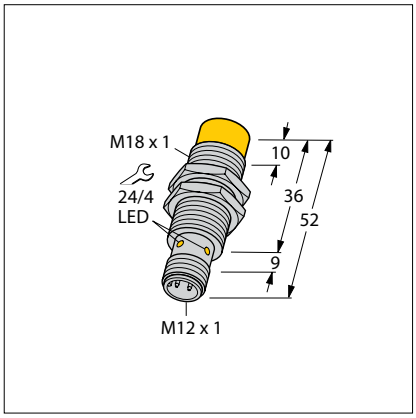

d054

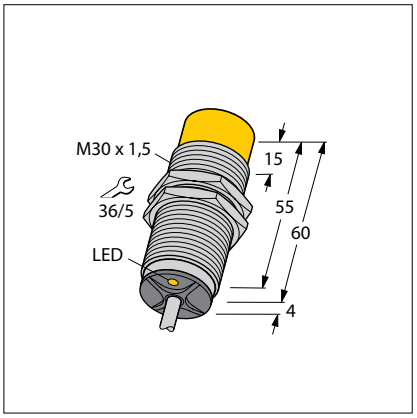

Dimension drawings

d055

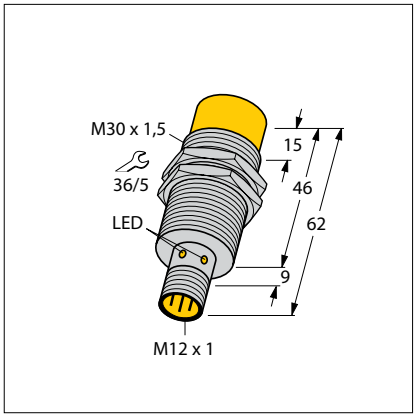

d058

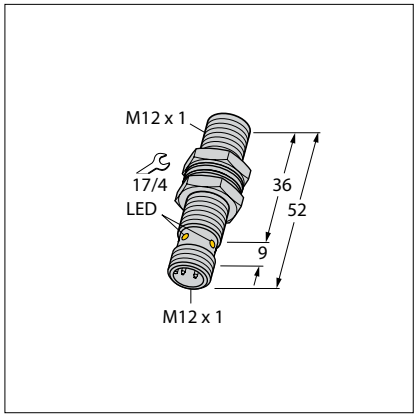

d061

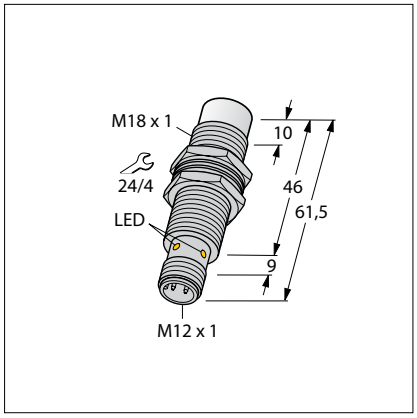

d056

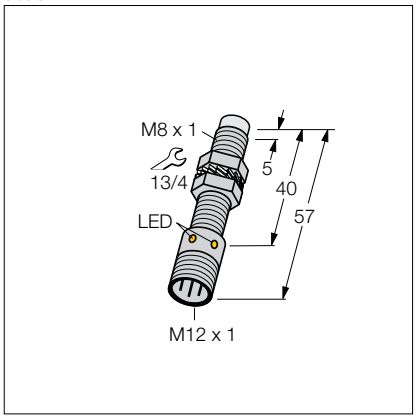

d059

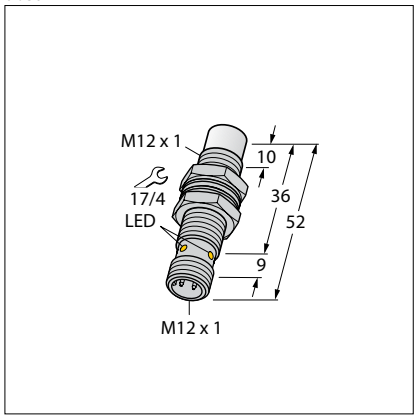

d062

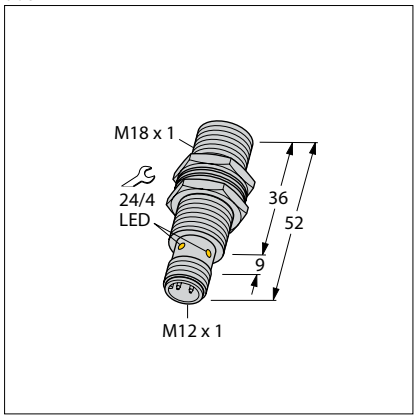

d057

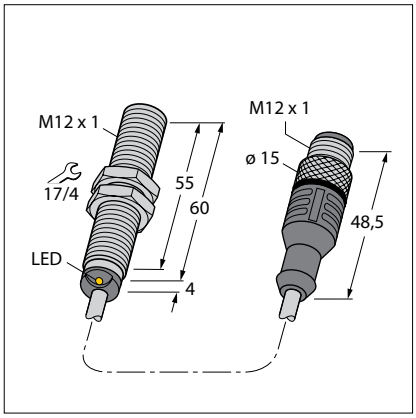

d060

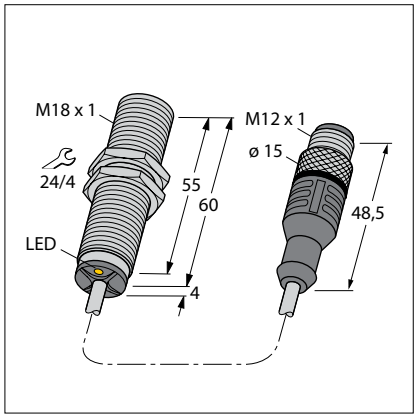

d063

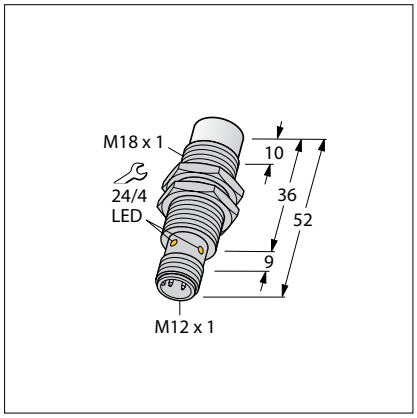

Hans Turck GmbH & Co. KG ▪ Tel. +49 208 49 52-0 ▪ Fax +49 208 49 52-264

gs in drawings

d064

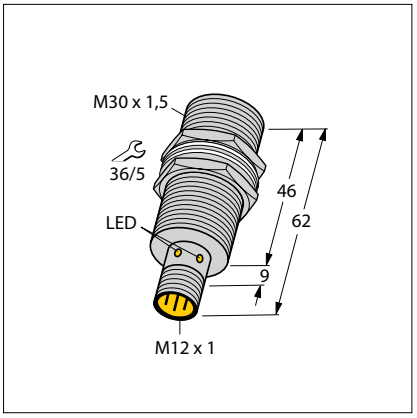

d067

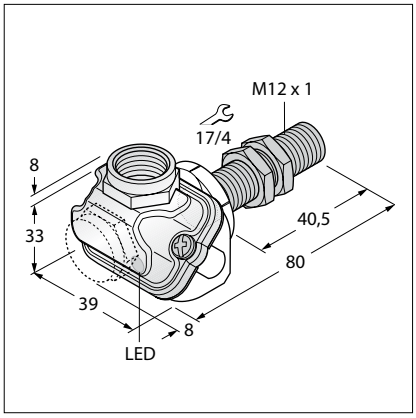

d070

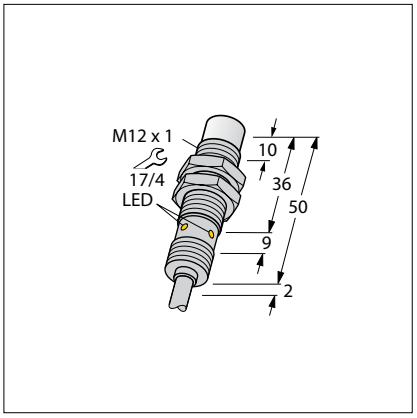

d065

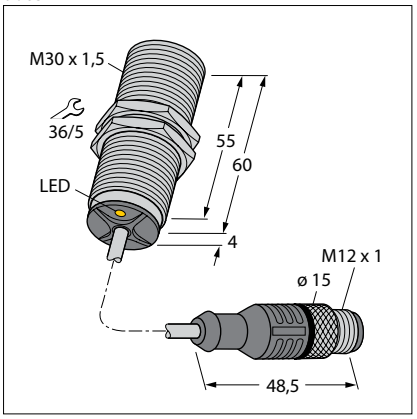

d068

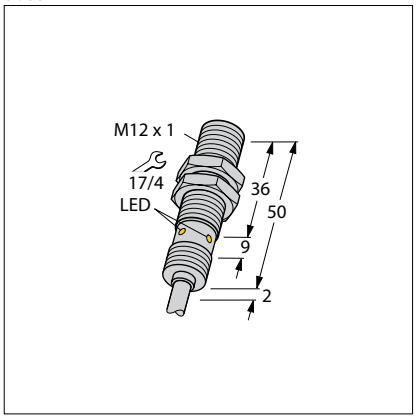

d071

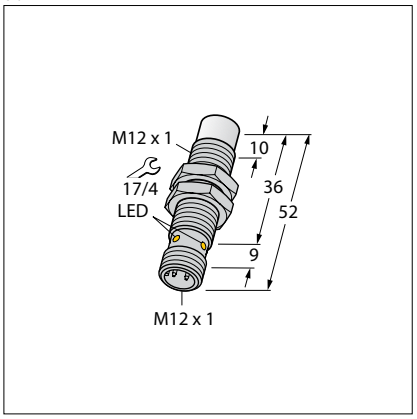

d066

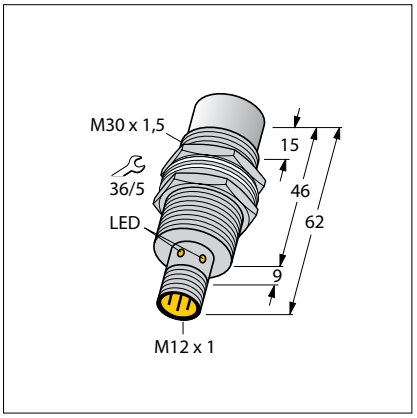

d069

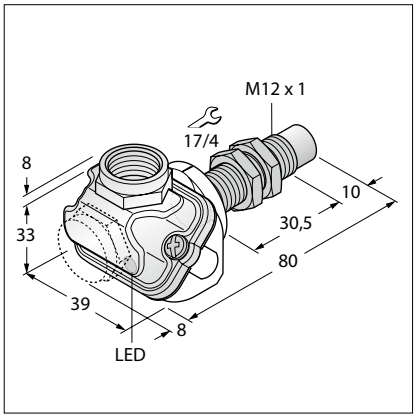

d072

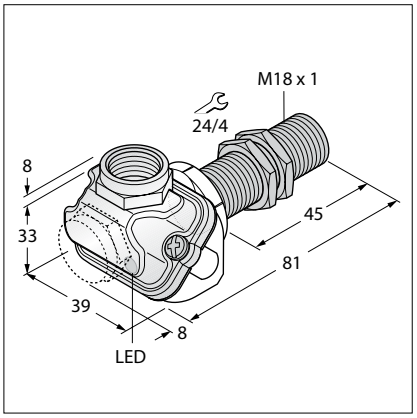

Dimension drawings

d073

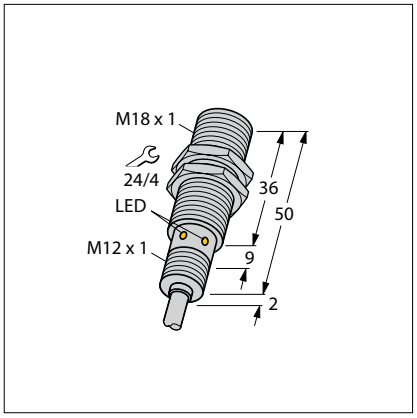

d076

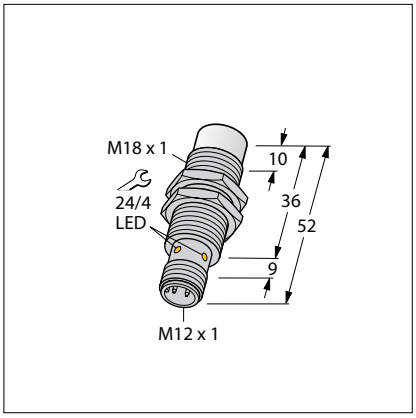

d079

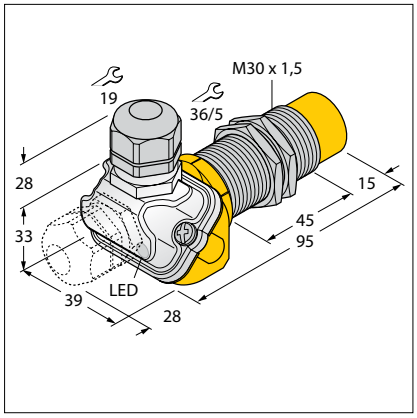

d074

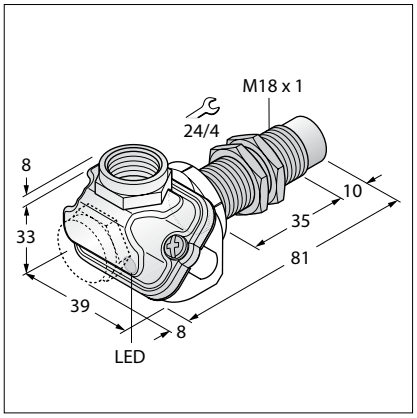

d077

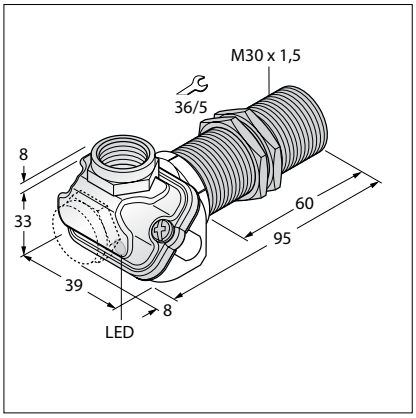

d080

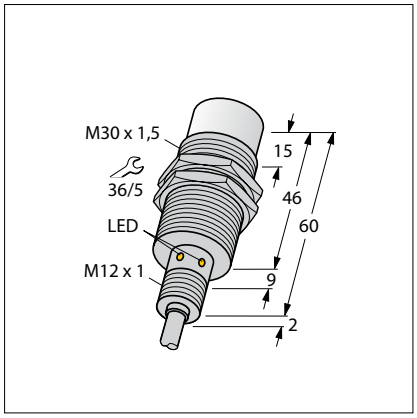

d075

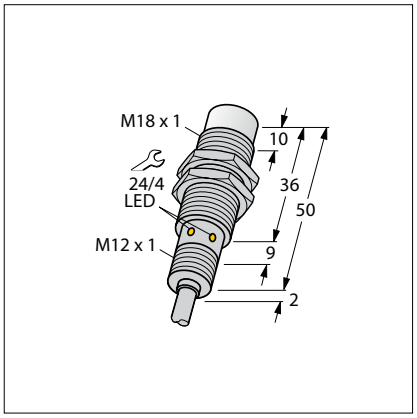

d078

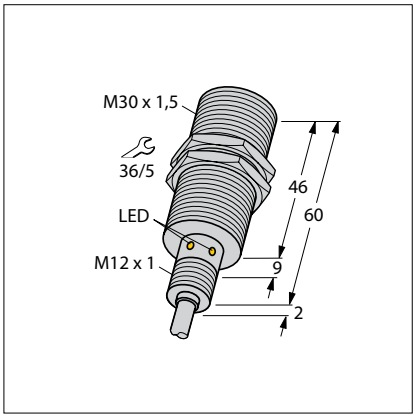

d081

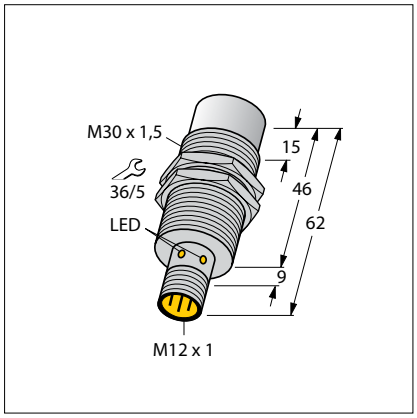

Hans Turck GmbH & Co. KG ▪ Tel. +49 208 49 52-0 ▪ Fax +49 208 49 52-264

gs in drawings

d082

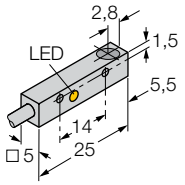

d085

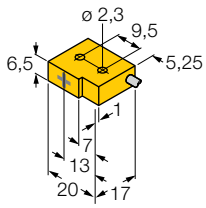

d088

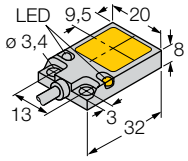

d083

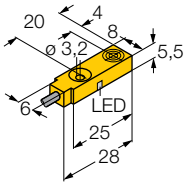

d086

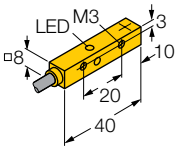

d089

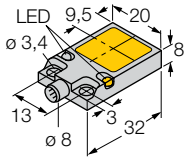

d084

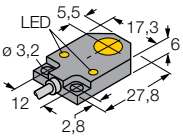

d087

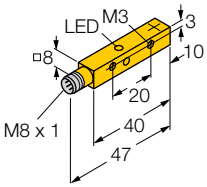

d090

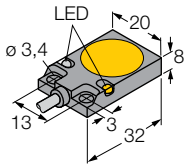

Dimension drawings

d091

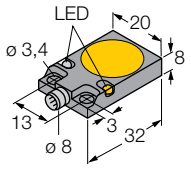

d094

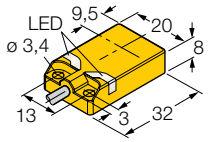

d097

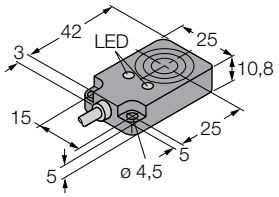

d092

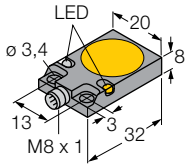

d095

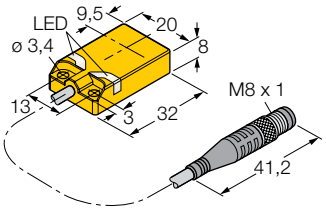

d098

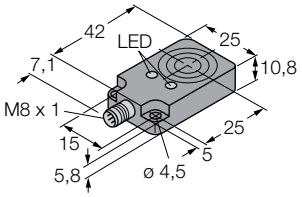

d093

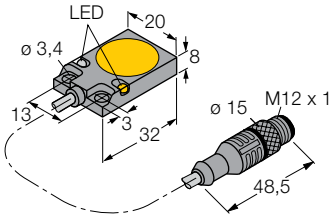

d096

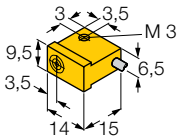

d099

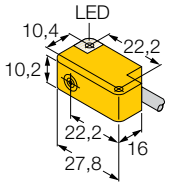

gs in drawings

d100

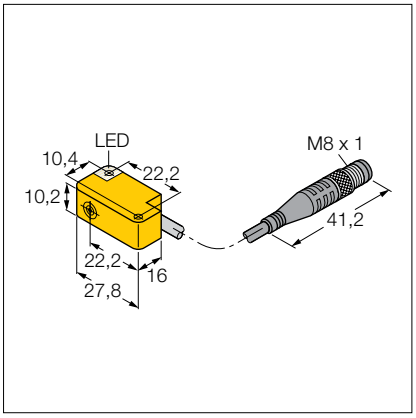

d103

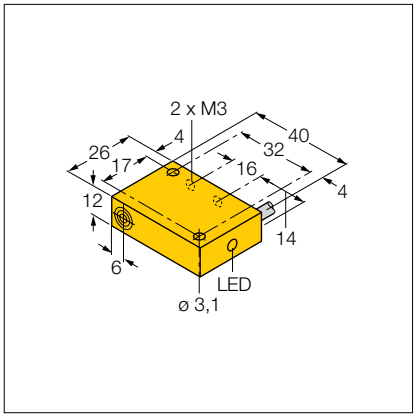

d106

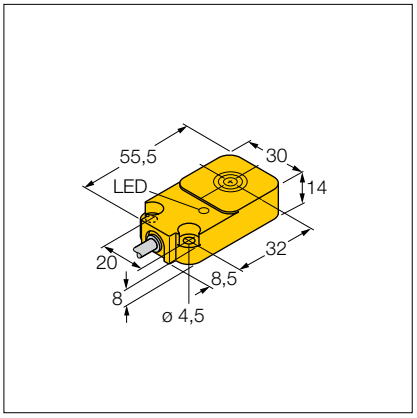

d101

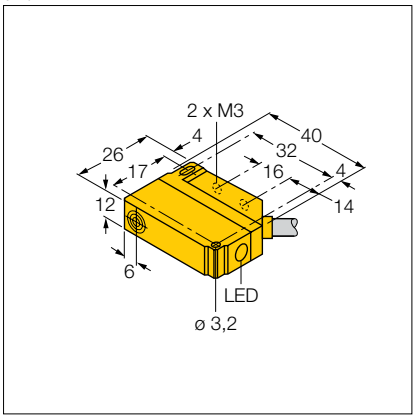

d104

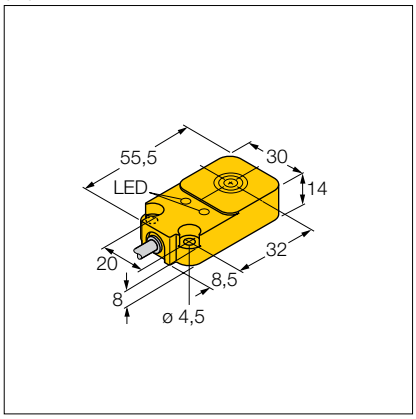

d107

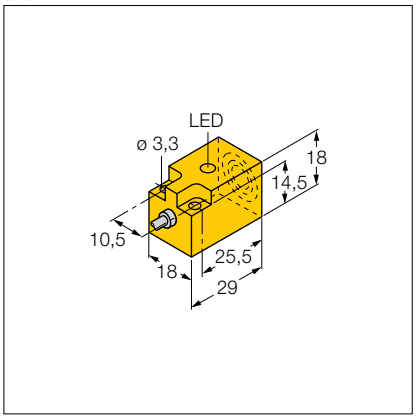

d102

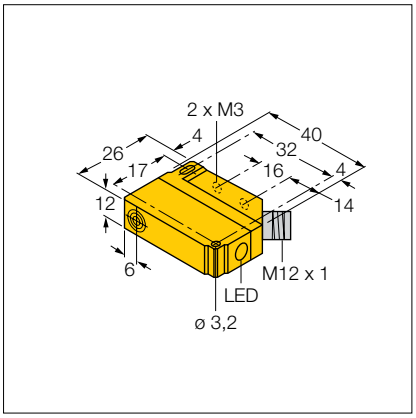

d105

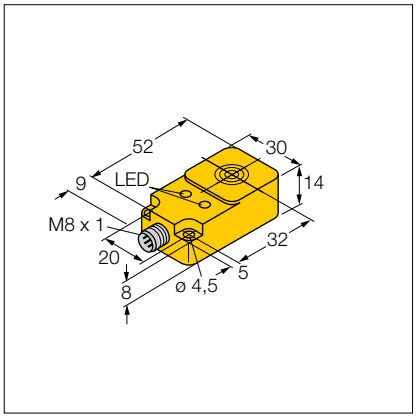

d108

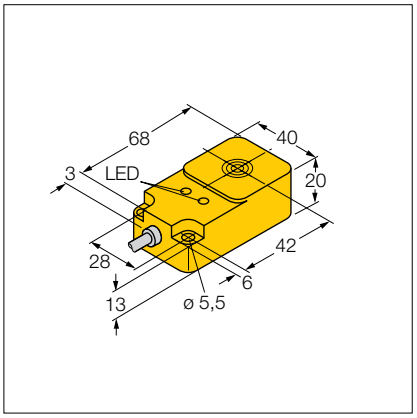

Dimension drawings

d109

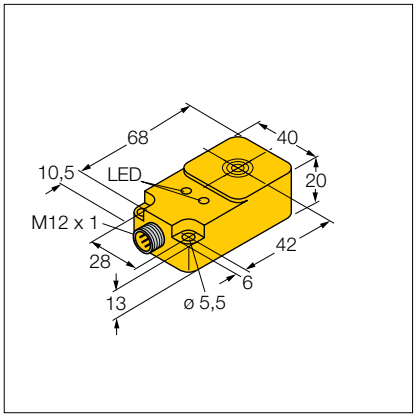

d112

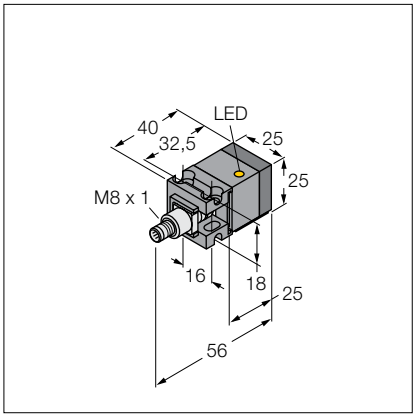

d115

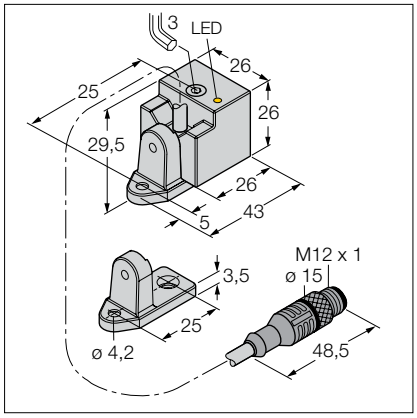

d110

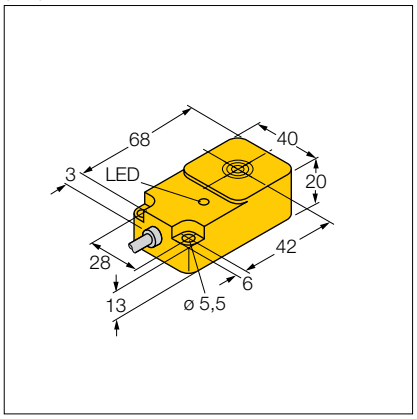

d113

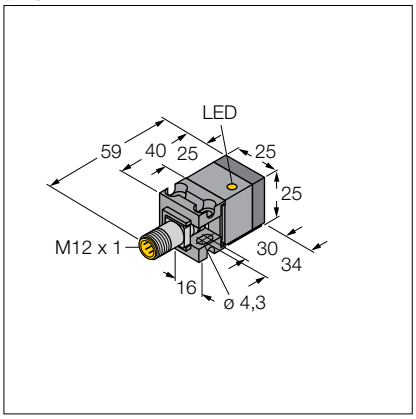

d116

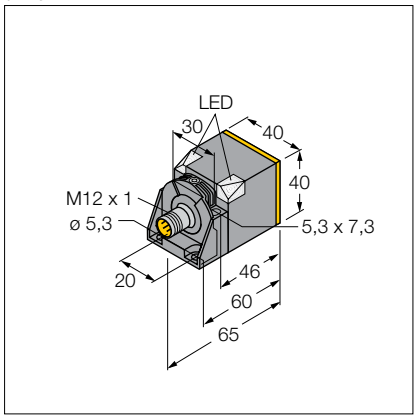

d111

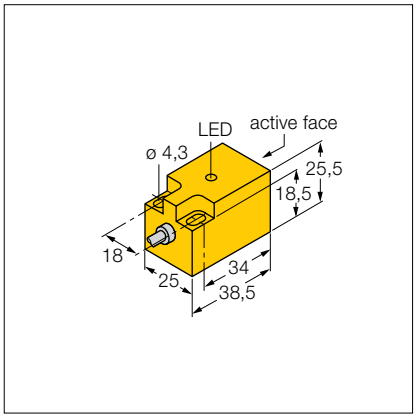

d114

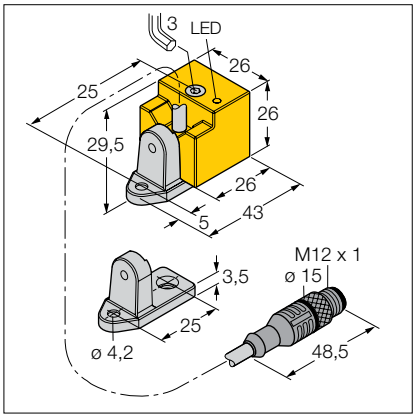

d117

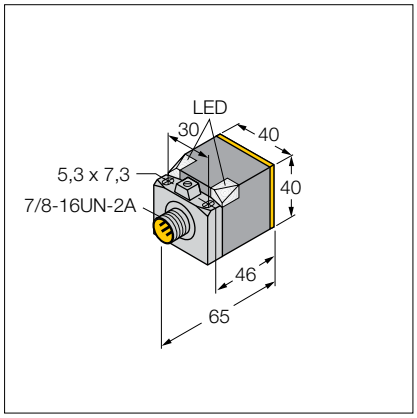

gs in drawings

d118

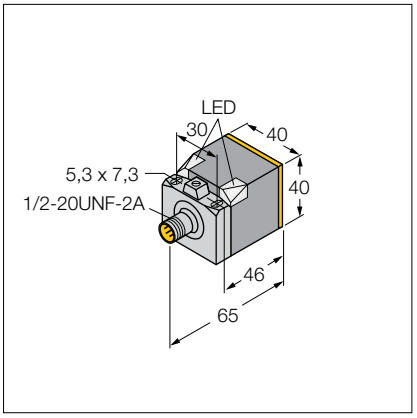

d121

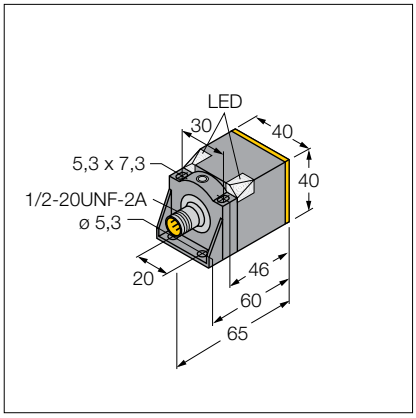

d124

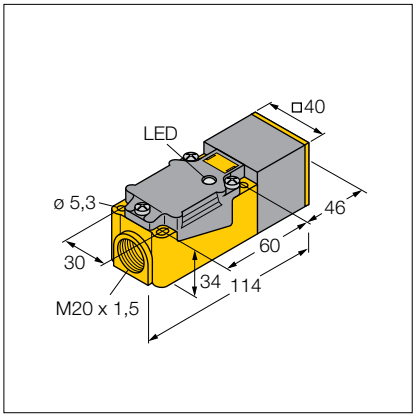

d119

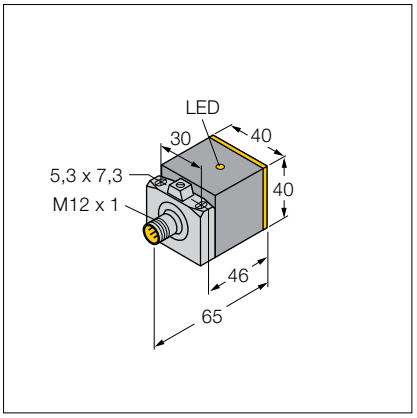

d122

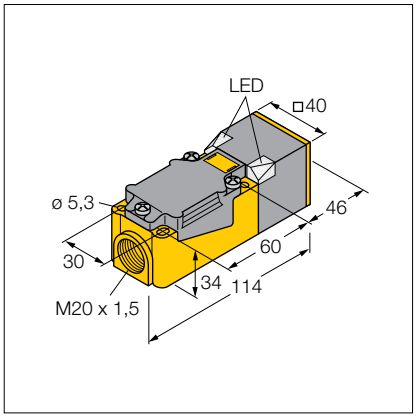

d125

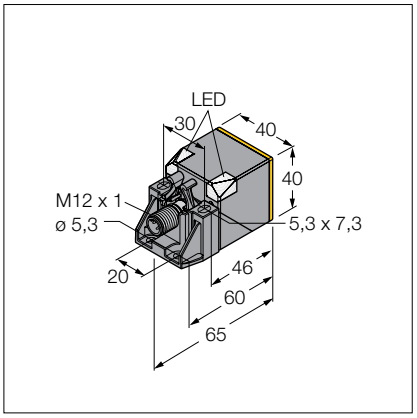

d120

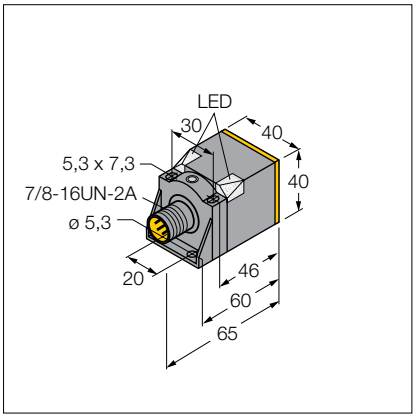

d123

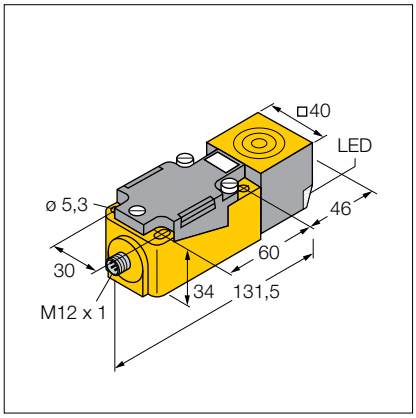

d126

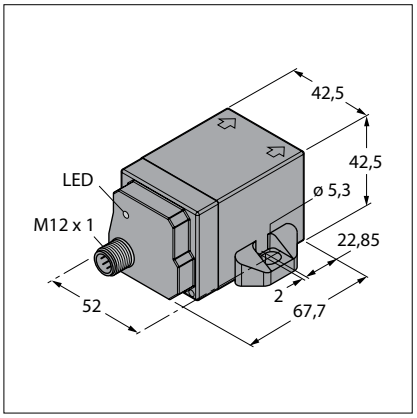

Dimension drawings

d127

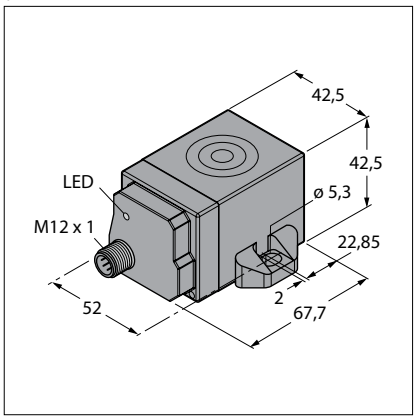

d130

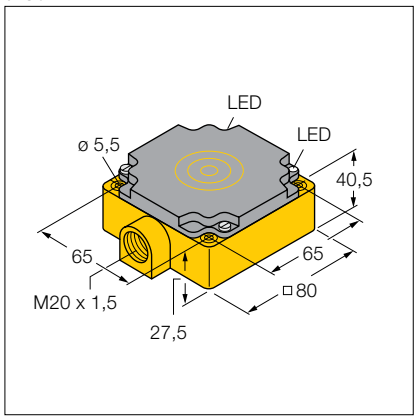

d133

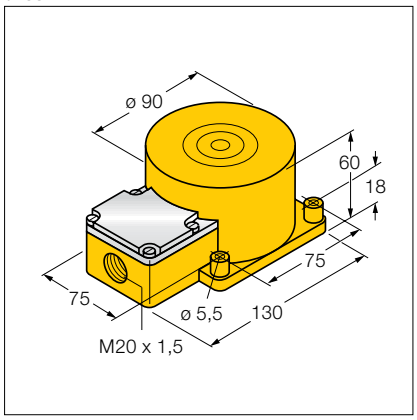

d128

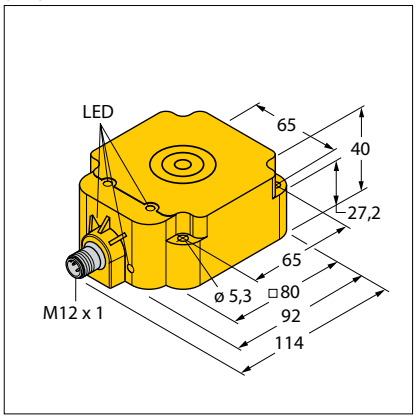

d131

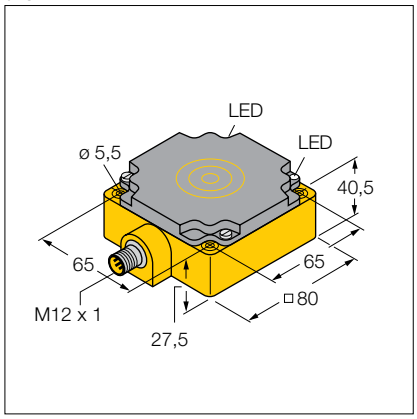

d134

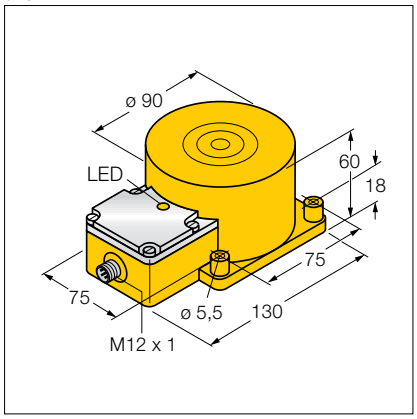

d129

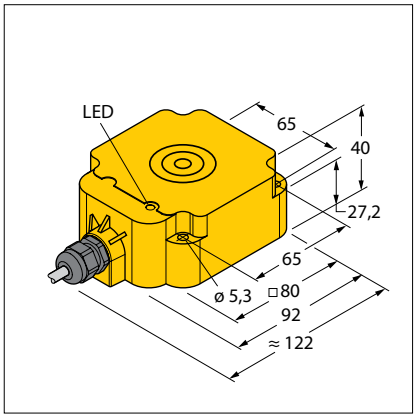

d132

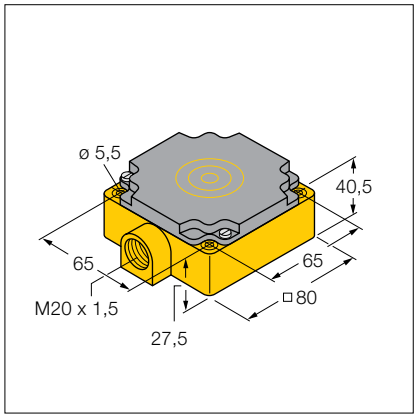

d135

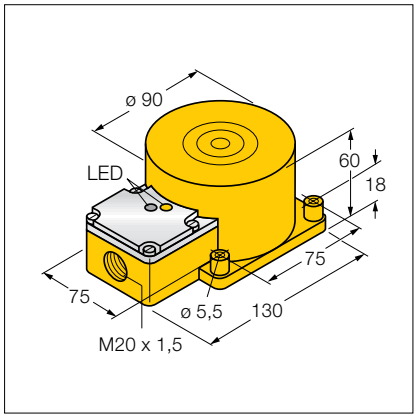

Hans Turck GmbH & Co. KG ▪ Tel. +49 208 49 52-0 ▪ Fax +49 208 49 52-264

gs in drawings

d136

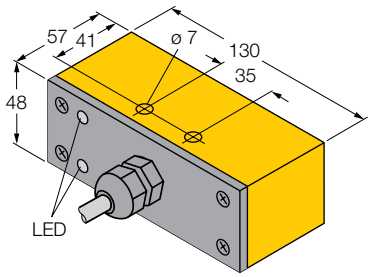

d139

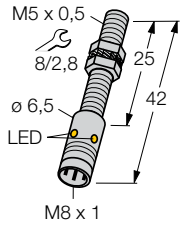

d142

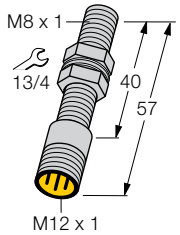

d137

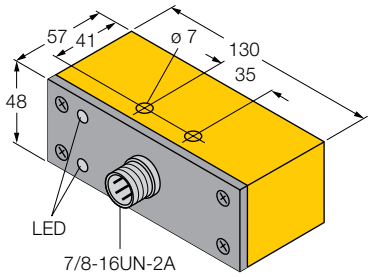

d140

d143

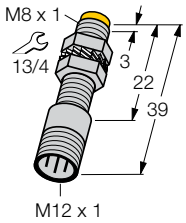

d138

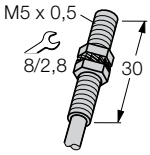

d141

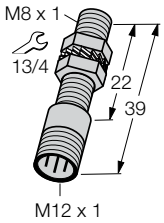

d144

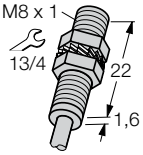

Dimension drawings

d145

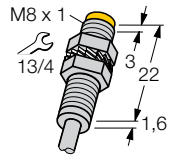

d148

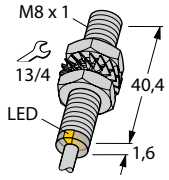

d151

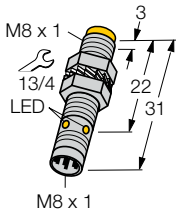

d146

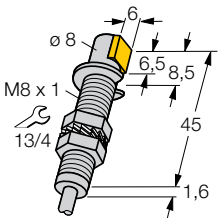

d149

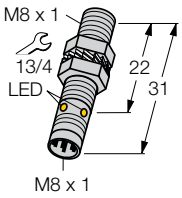

d152

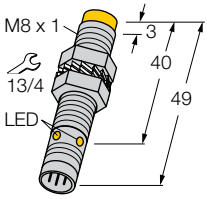

d147

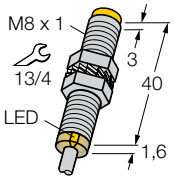

d150

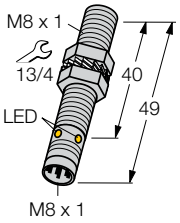

d153

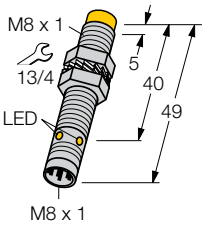

Hans Turck GmbH & Co. KG ▪ Tel. +49 208 49 52-0 ▪ Fax +49 208 49 52-264

gs in drawings

d154

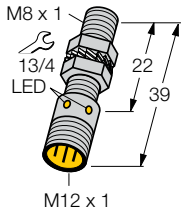

d157

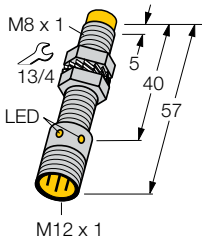

d160

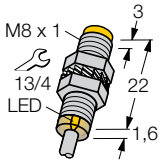

d155

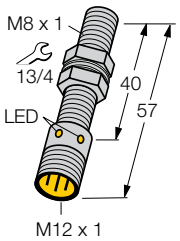

d158

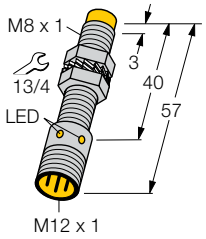

d161

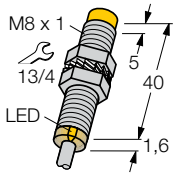

d156

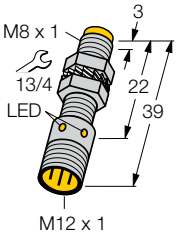

d159

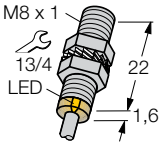

d162

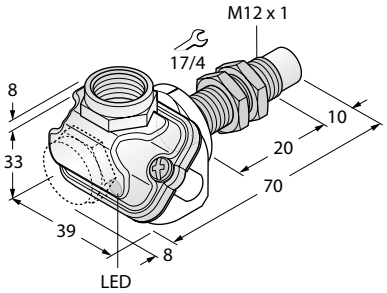

Dimension drawings

d163

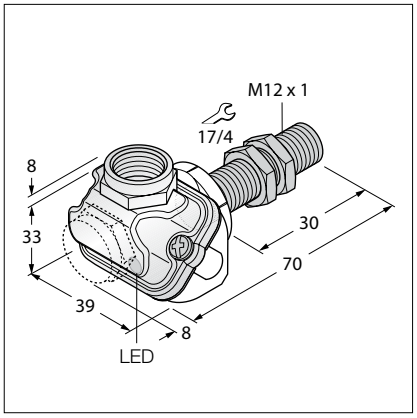

d166

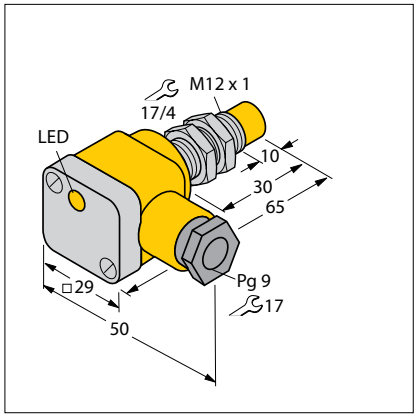

d169

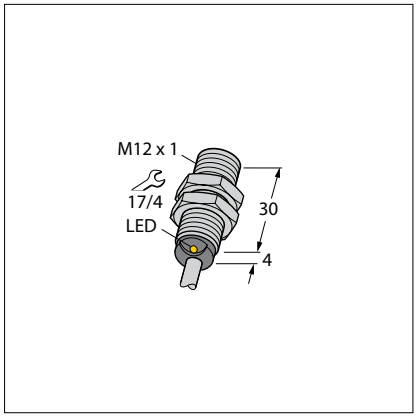

d164

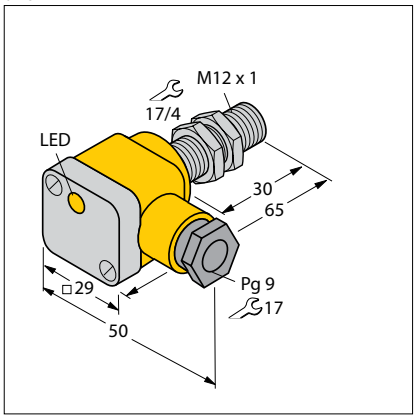

d167

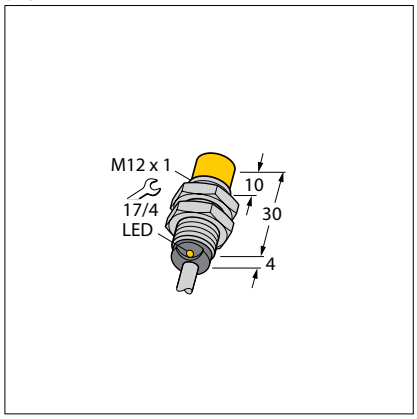

d170

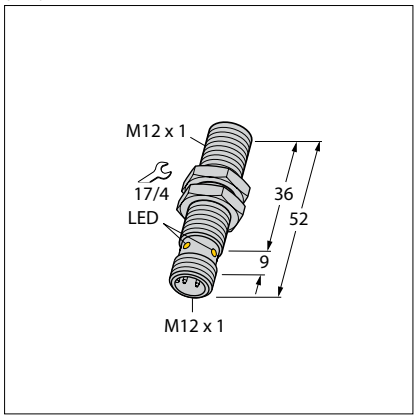

d165

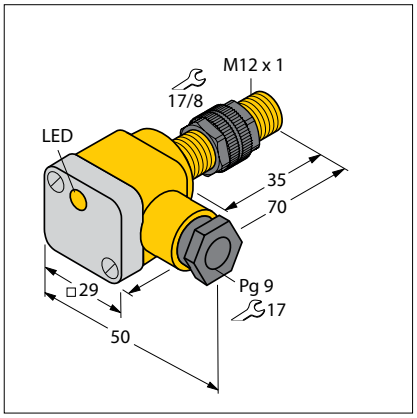

d168

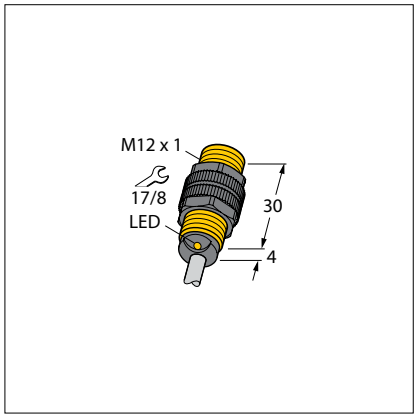

d171

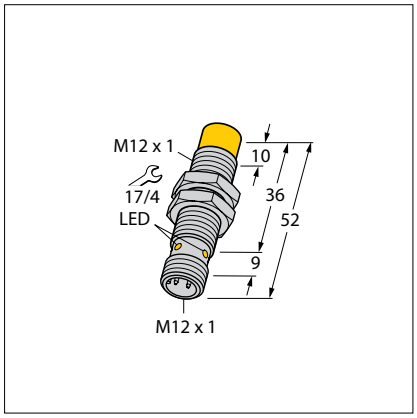

Hans Turck GmbH & Co. KG ▪ Tel. +49 208 49 52-0 ▪ Fax +49 208 49 52-264

gs in drawings

d172

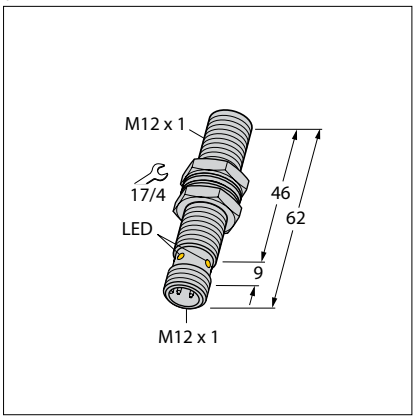

d175

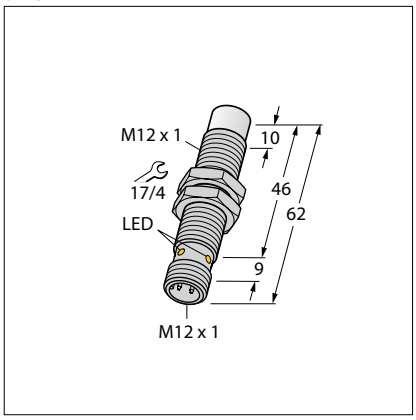

d178

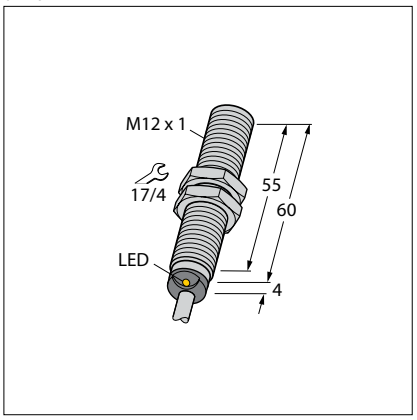

d173

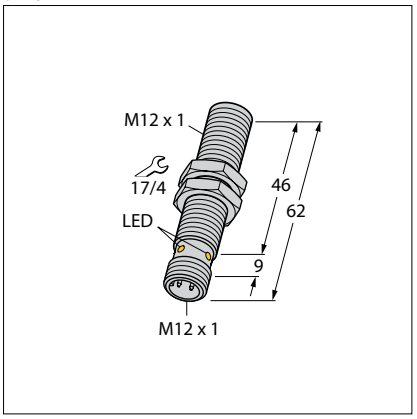

d176

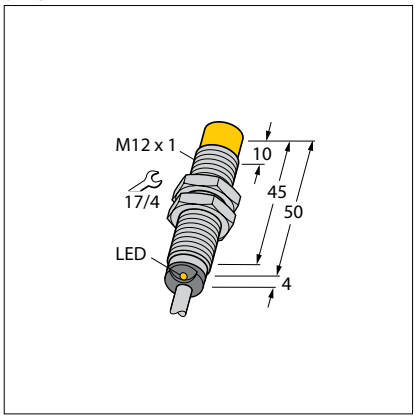

d179

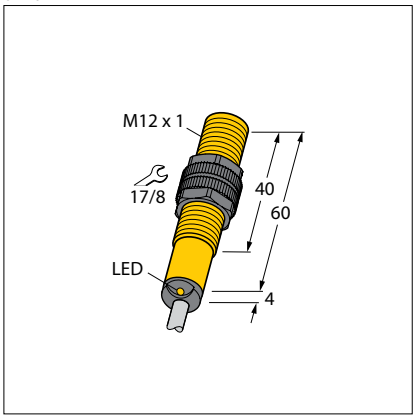

d174

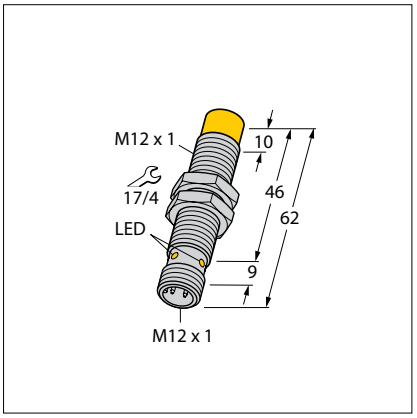

d177

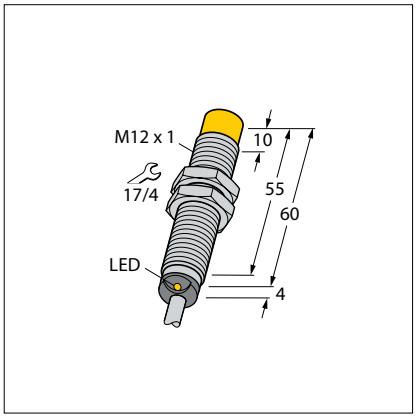

d180

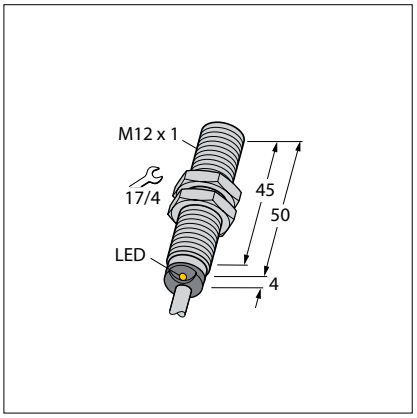

Dimension drawings

d181

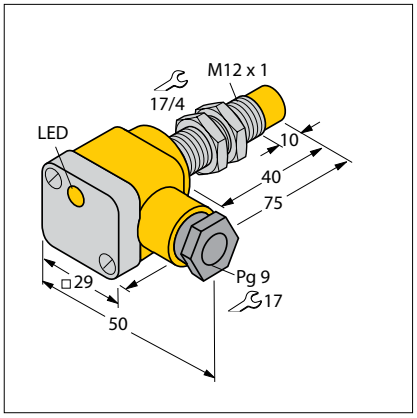

d184

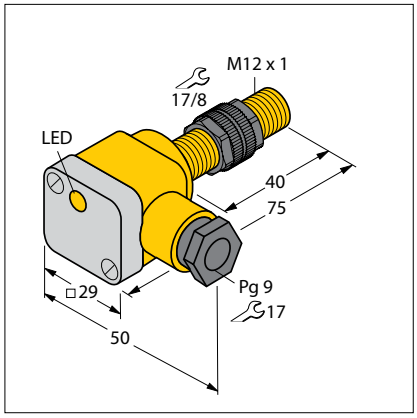

d187

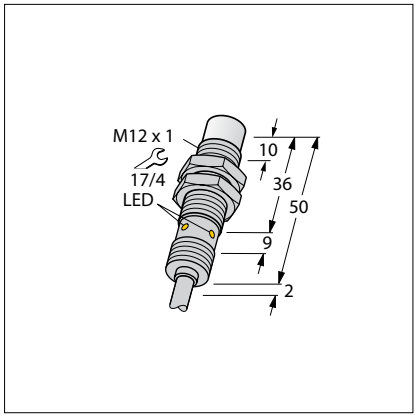

d182

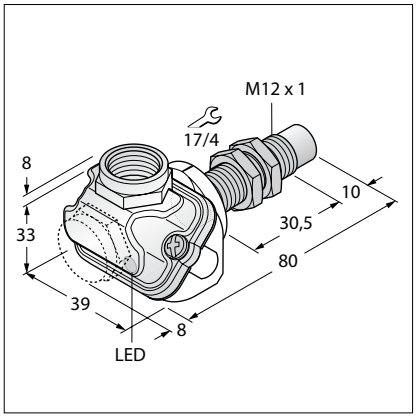

d185

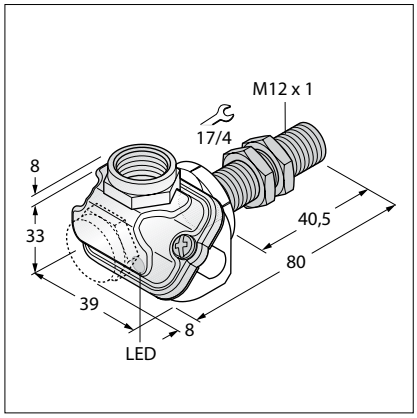

d188

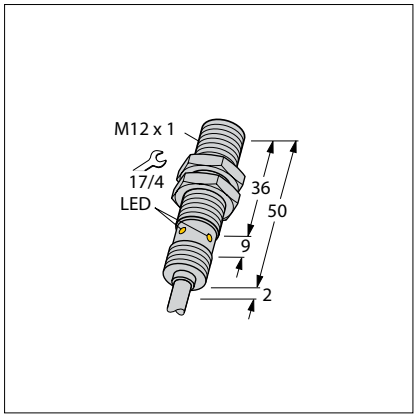

d183

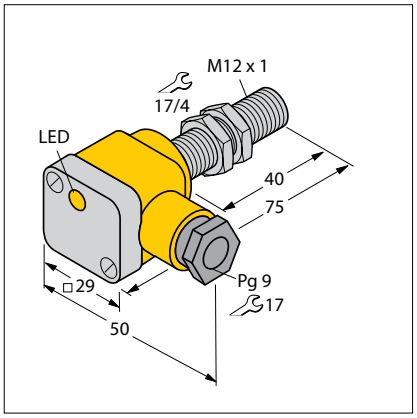

d186

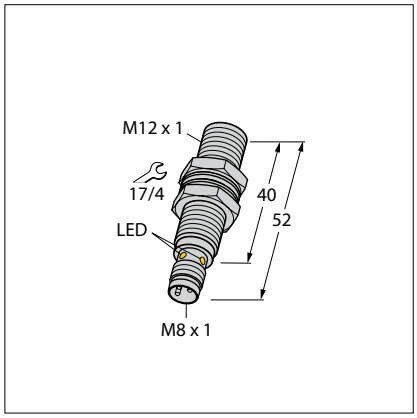

d189

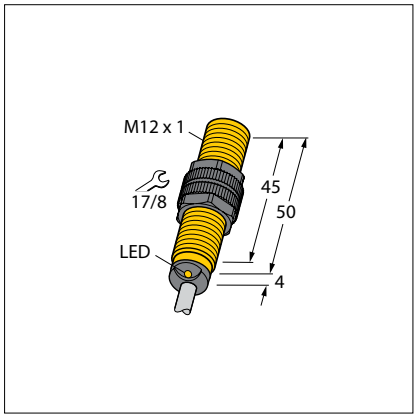

Hans Turck GmbH & Co. KG ▪ Tel. +49 208 49 52-0 ▪ Fax +49 208 49 52-264

gs in drawings

d190

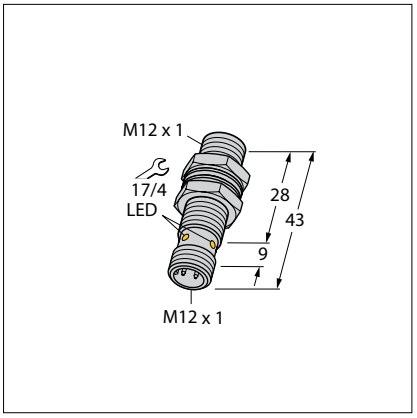

d193

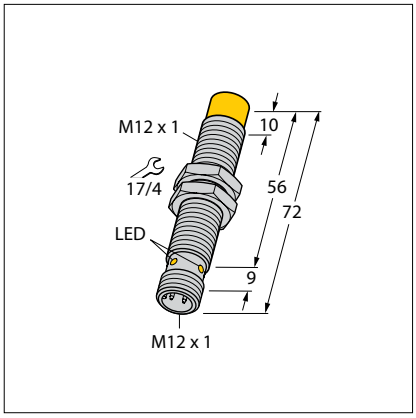

d196

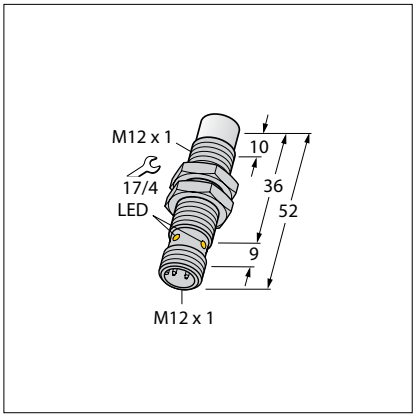

d191

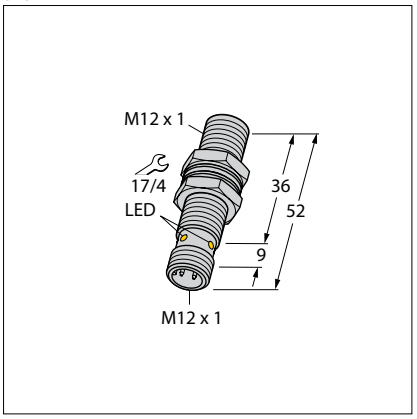

d194

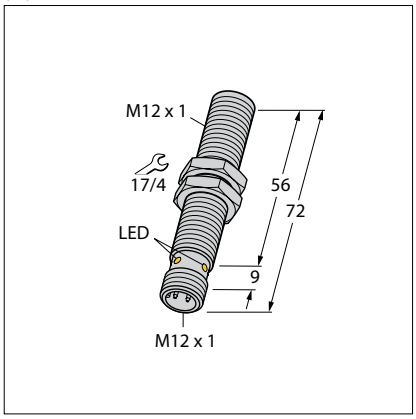

d197

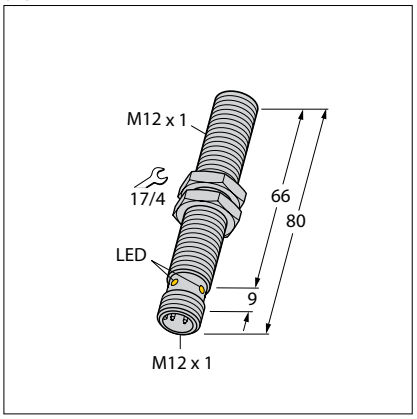

d192

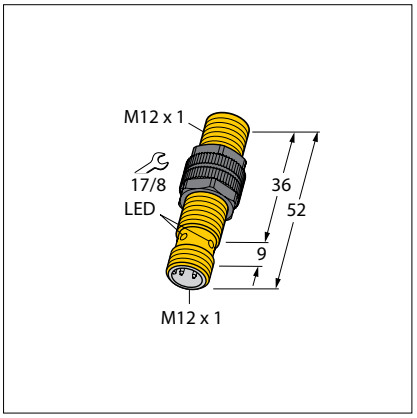

d195

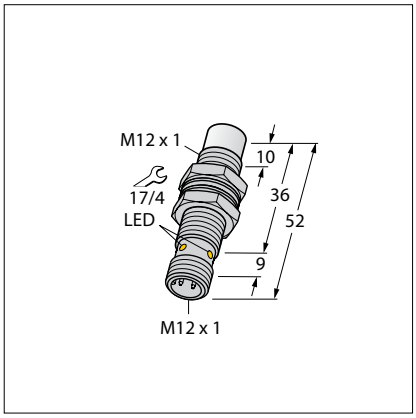

d198

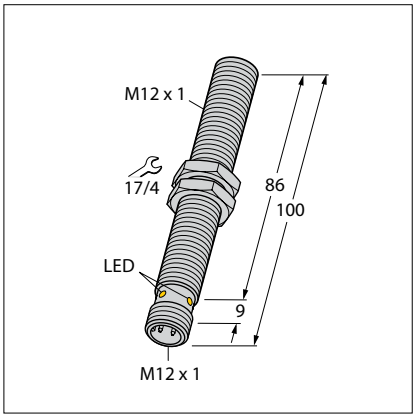

Dimension drawings

d199

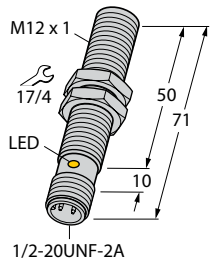

d202

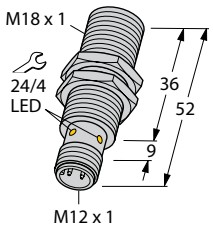

d205

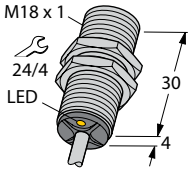

d200

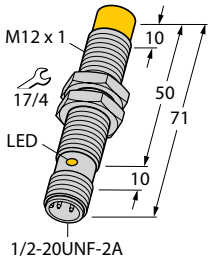

d203

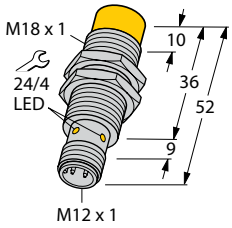

d206

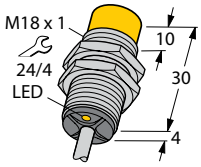

d201

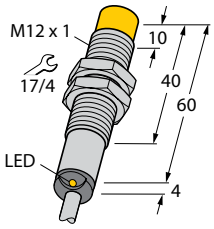

d204

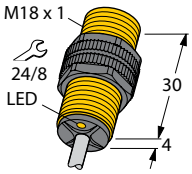

d207

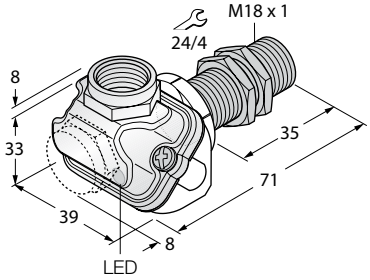

gs in drawings

d208

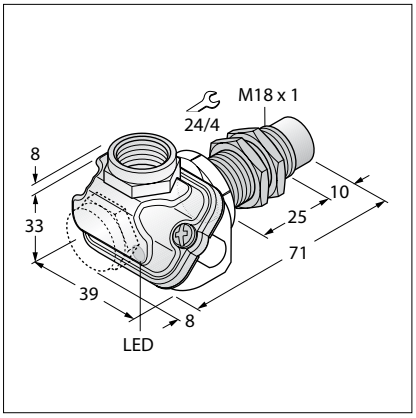

d211

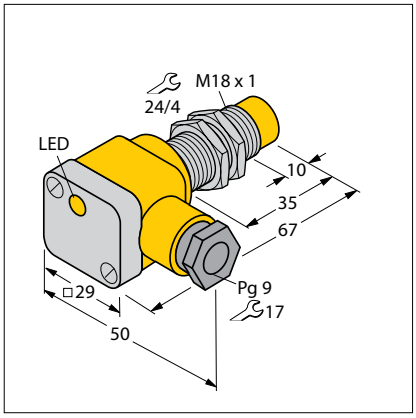

d214

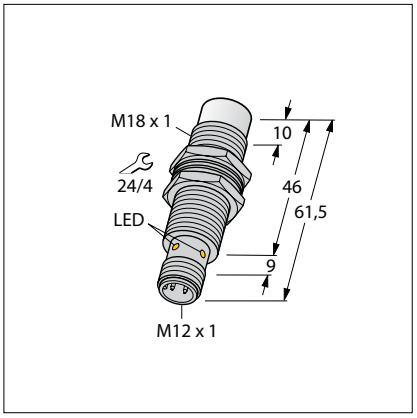

d209

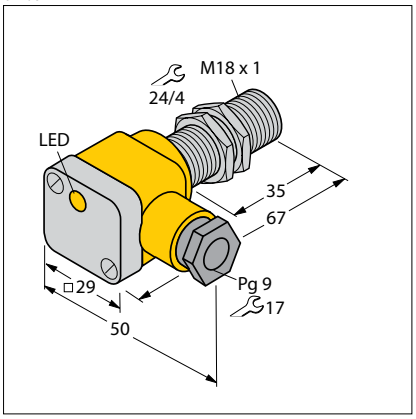

d212

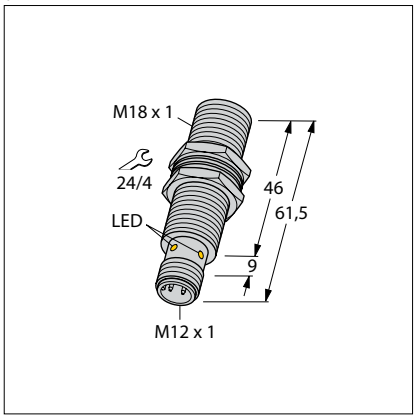

d215

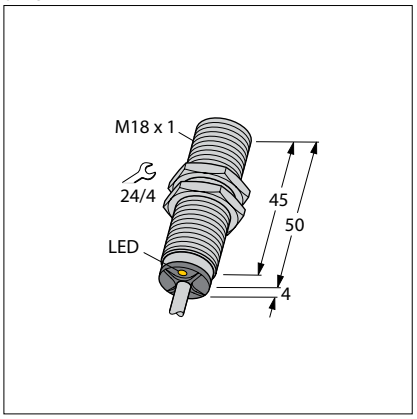

d210

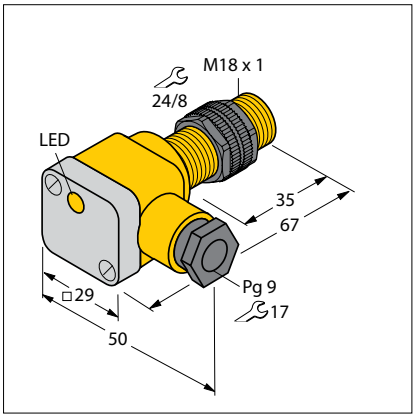

d213

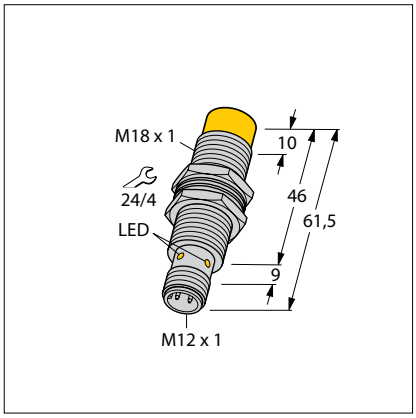

d216

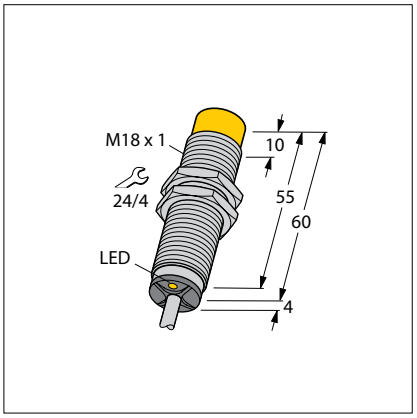

Dimension drawings

d217

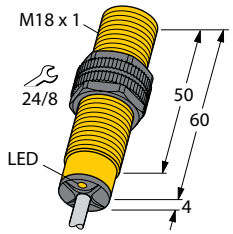

d220

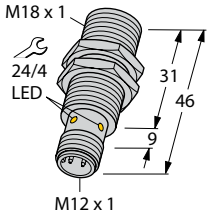

d223

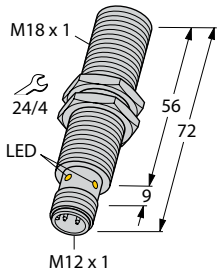

d218

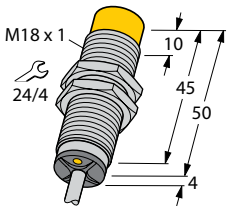

d221

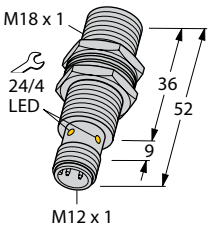

d224

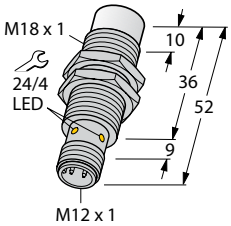

d219

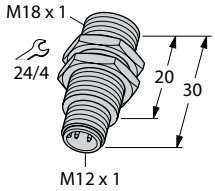

d222

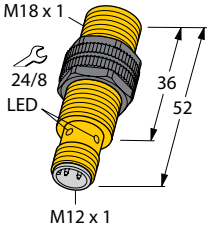

d225

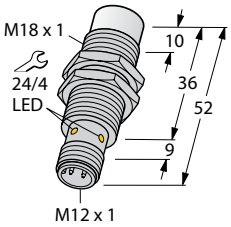

Hans Turck GmbH & Co. KG ▪ Tel. +49 208 49 52-0 ▪ Fax +49 208 49 52-264

gs in drawings

d226

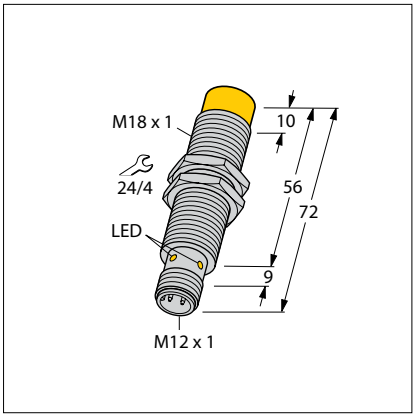

d229

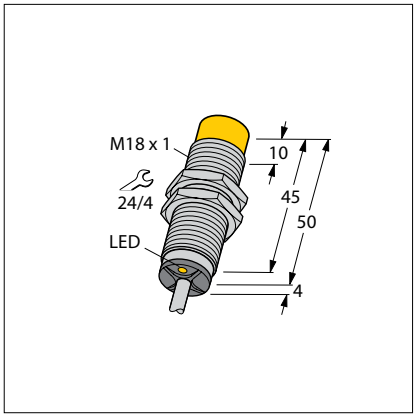

d232

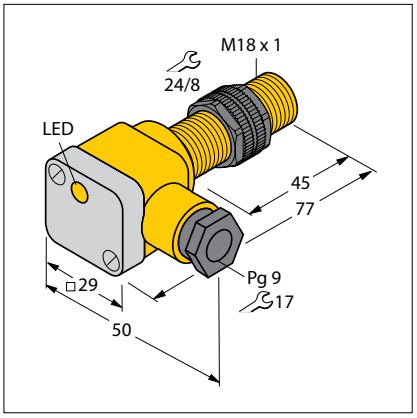

d227

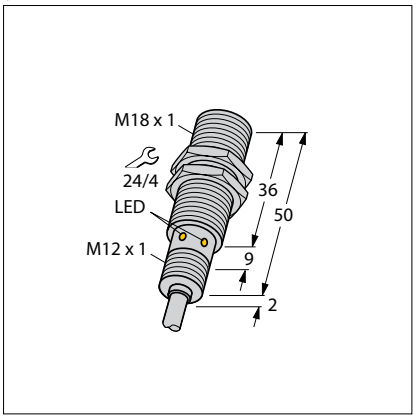

d230

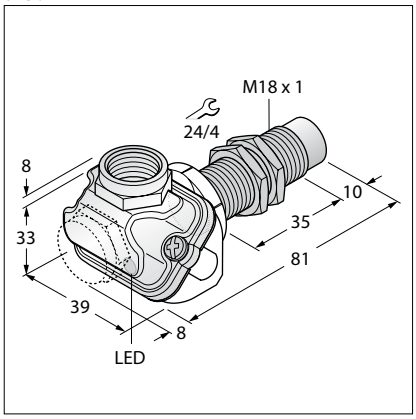

d233

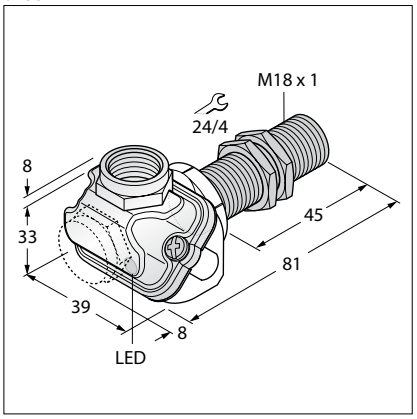

d228

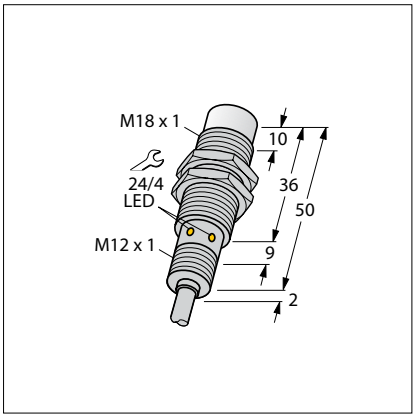

d231

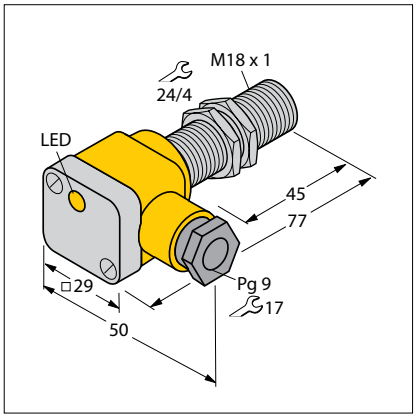

d234

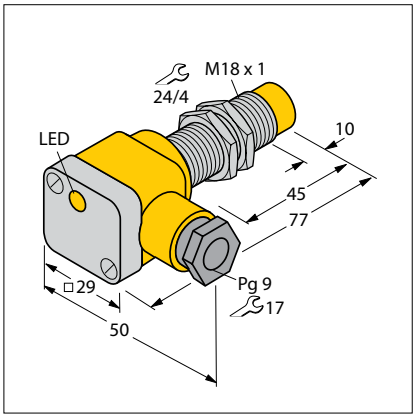

Dimension drawings

d235

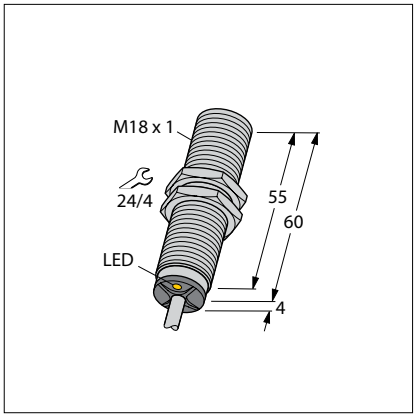

d238

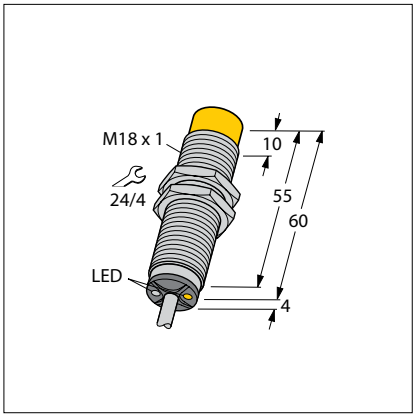

d241

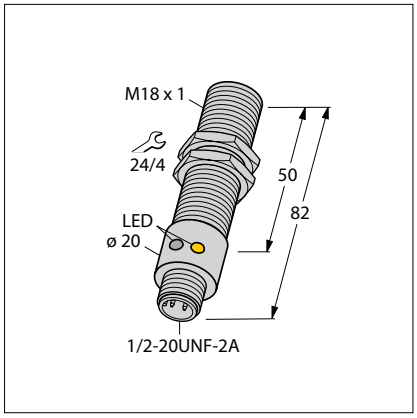

d236

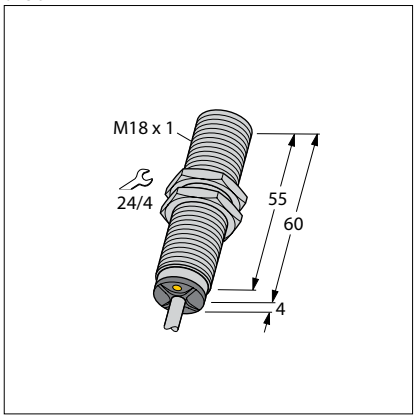

d239

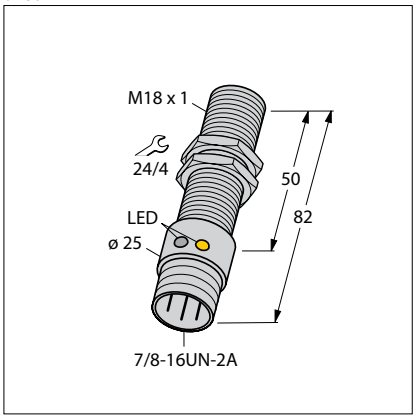

d242

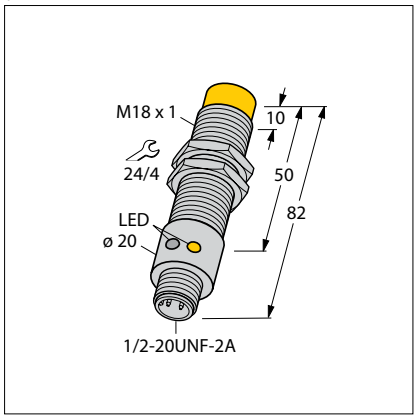

d237

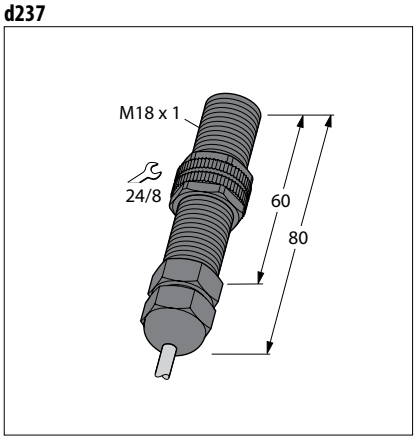

d240

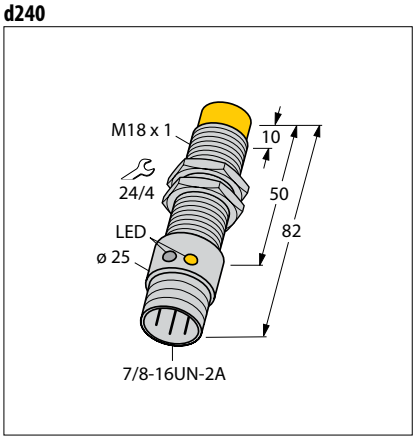

d243

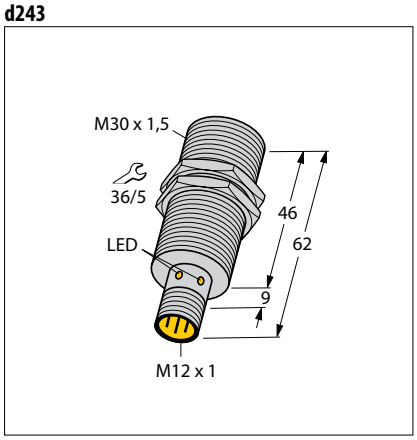

gs in drawings

d244

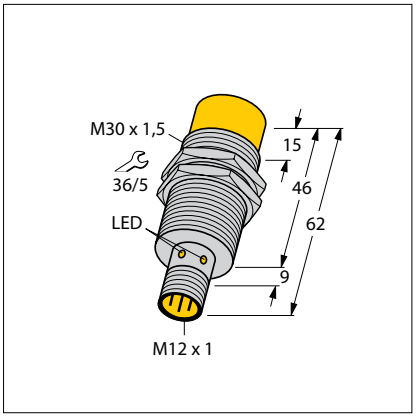

d245

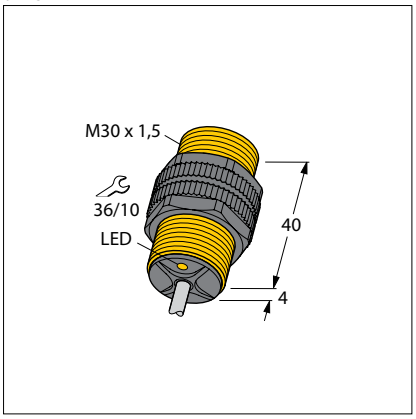

d246

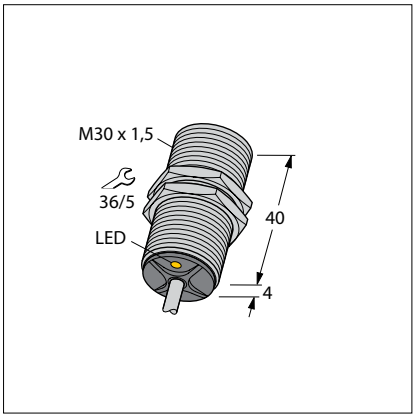

d247

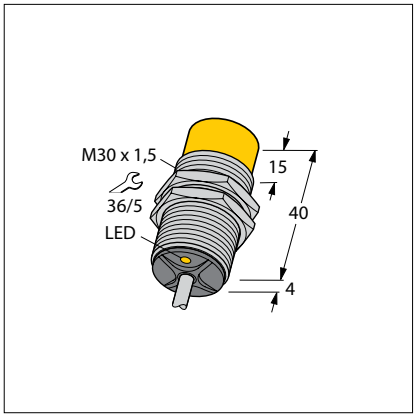

d248

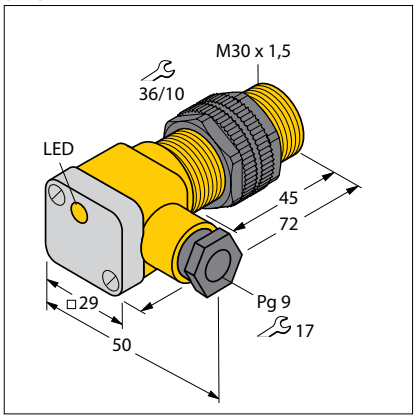

d249

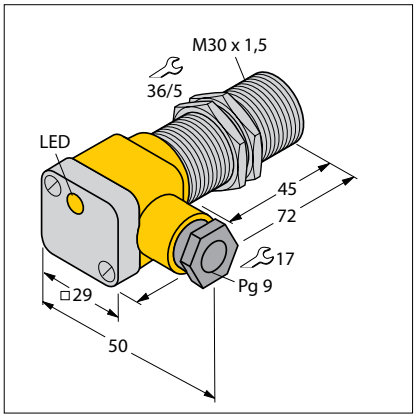

d250

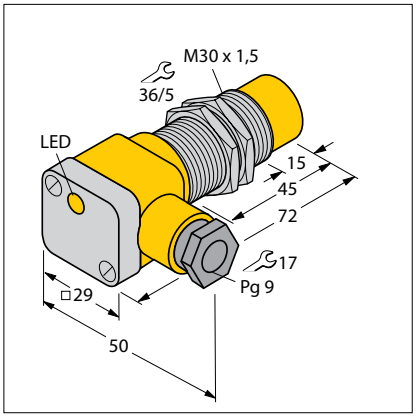

d251

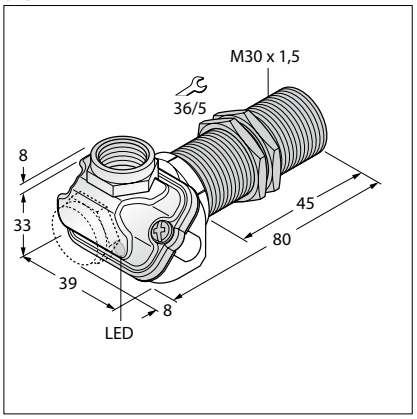

d252

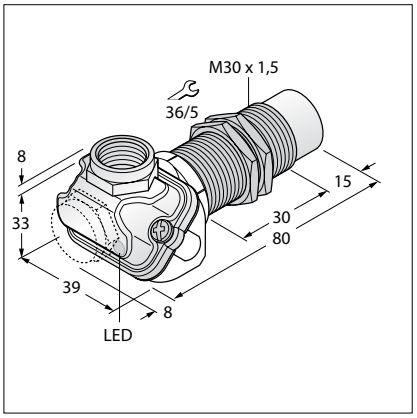

Dimension drawings

d253

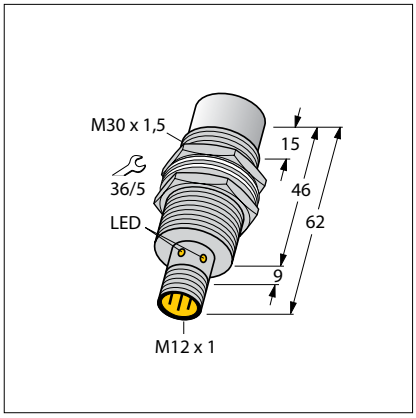

d256

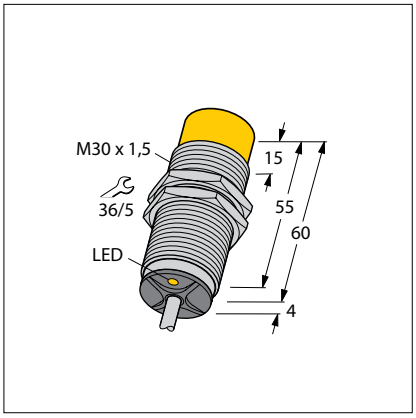

d259

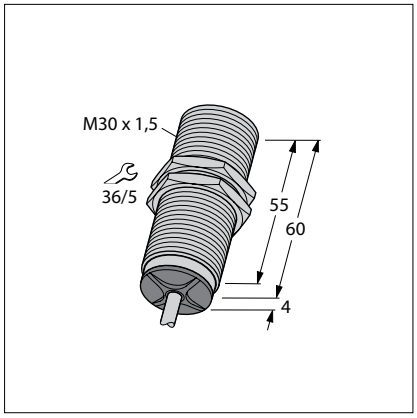

d254

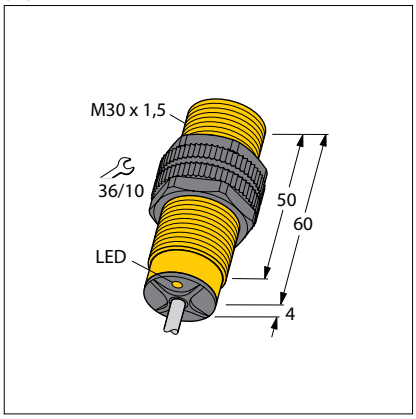

d257

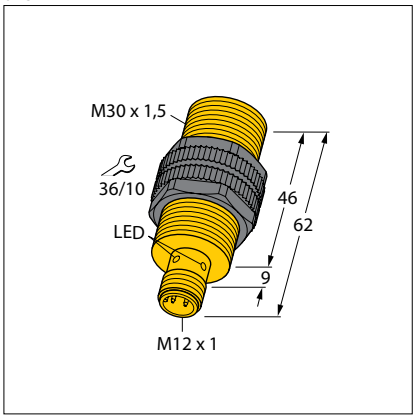

d260

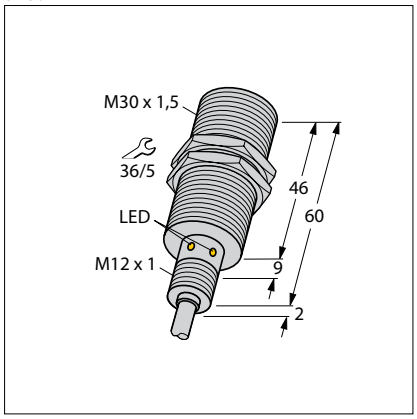

d255

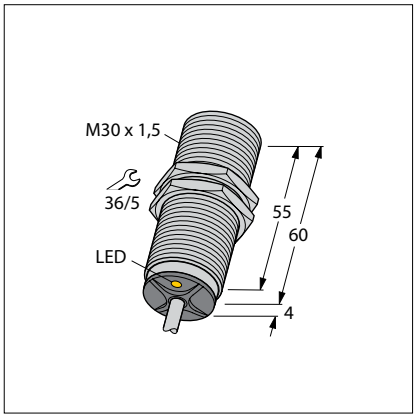

d258

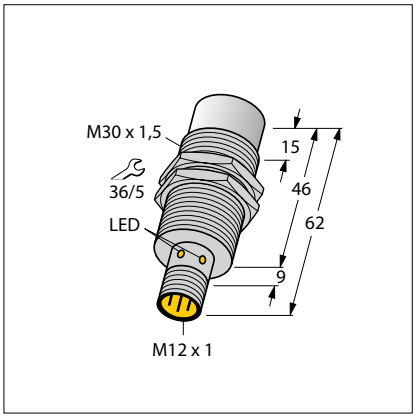

d261

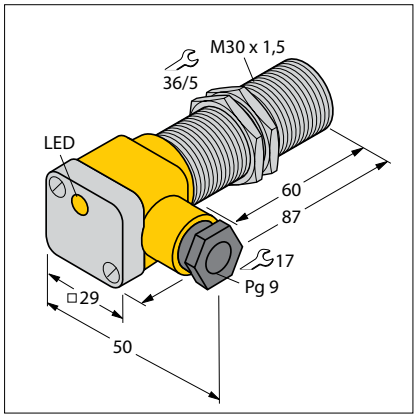

gs in drawings

d262

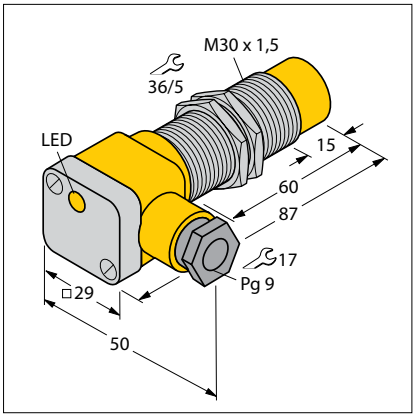

d265

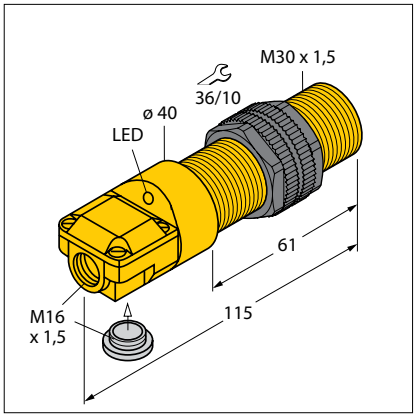

d268

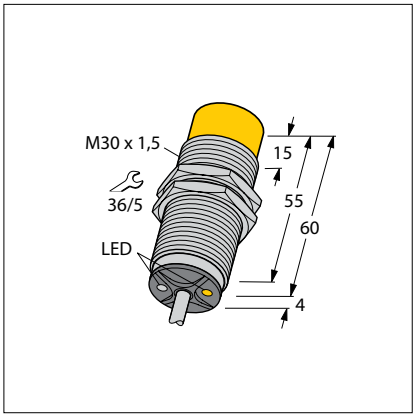

d263

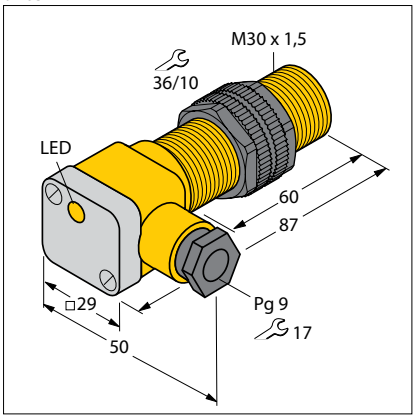

d266

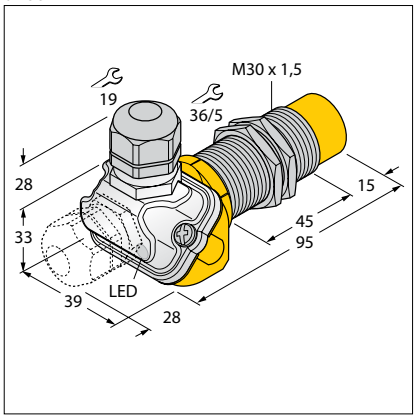

d269

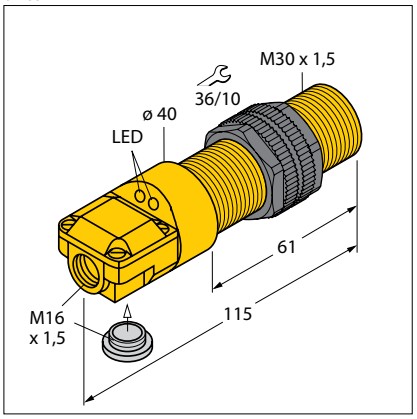

d264

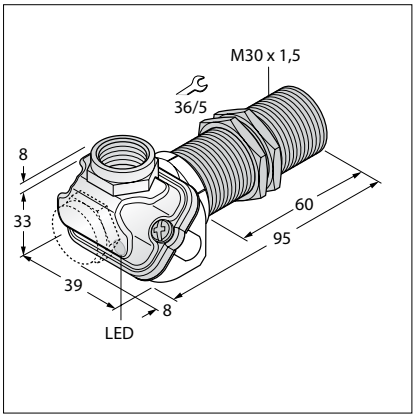

d267

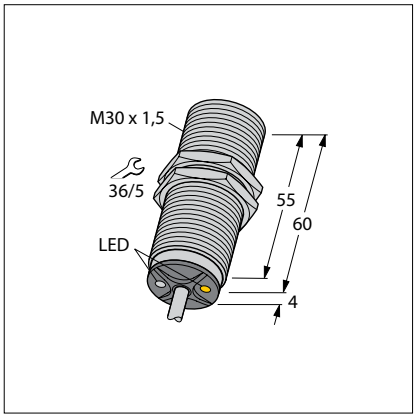

d270

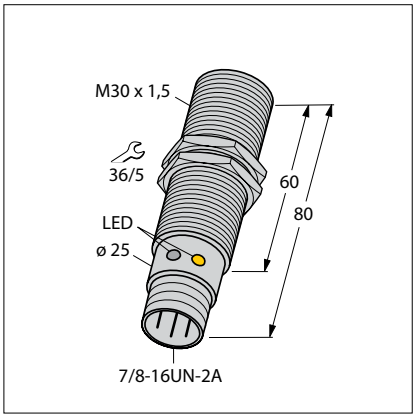

Dimension drawings

d271

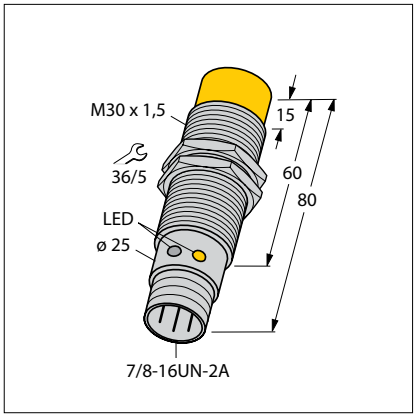

d274

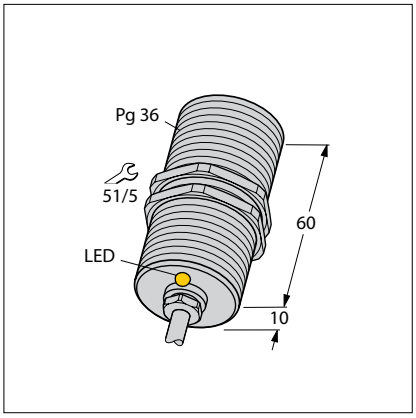

d277

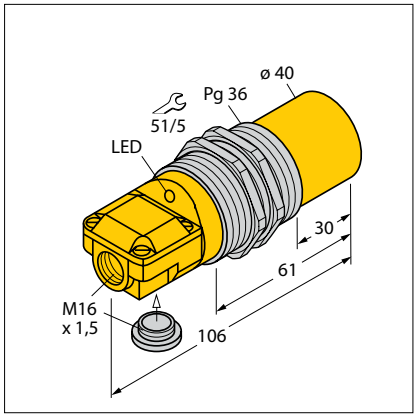

d272

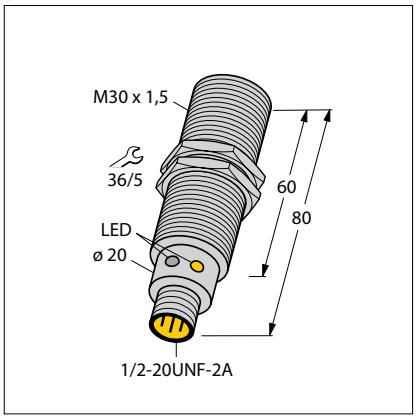

d275

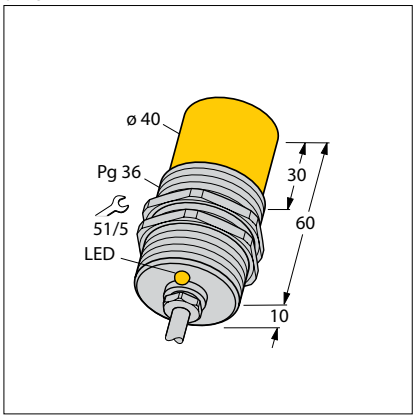

d278

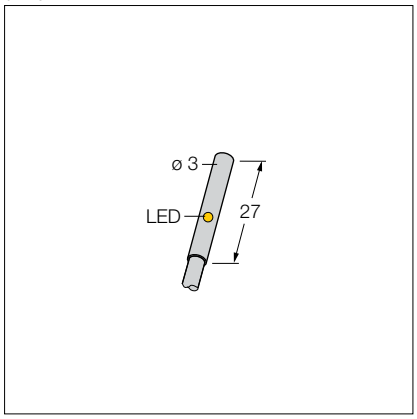

d273

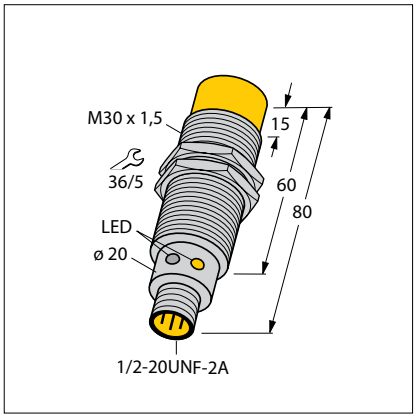

d276

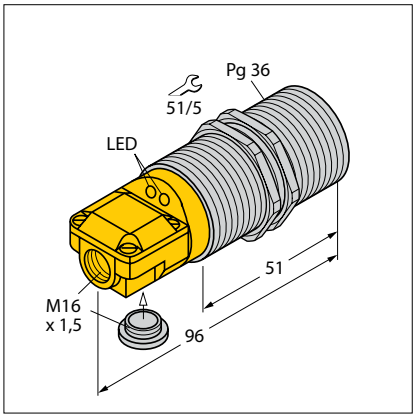

d279

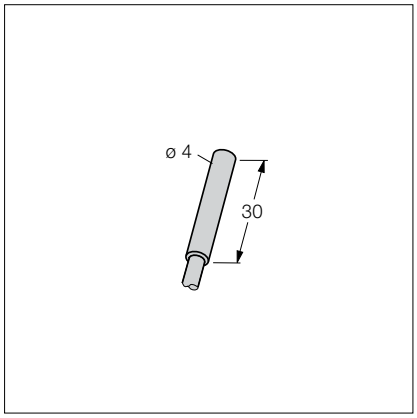

Hans Turck GmbH & Co. KG ▪ Tel. +49 208 49 52-0 ▪ Fax +49 208 49 52-264

gs in drawings

d280

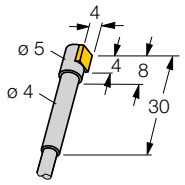

d283

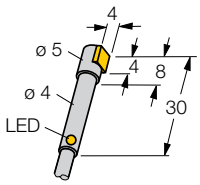

d286

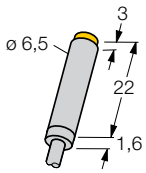

d281

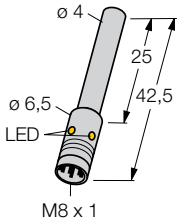

d284

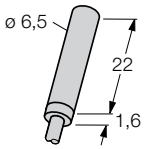

d287

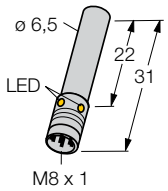

d282

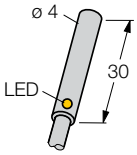

d285

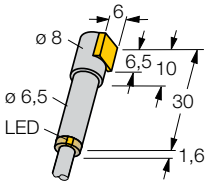

d288

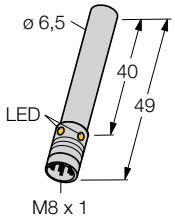

Dimension drawings

d289

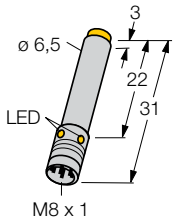

d292

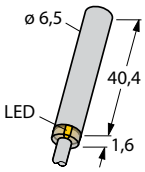

d295

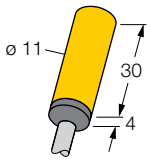

d290

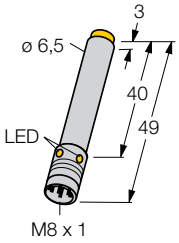

d293

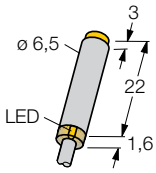

d296

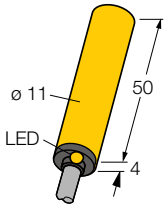

d291

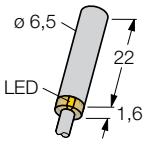

d294

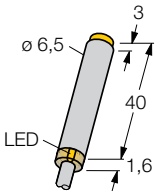

d297

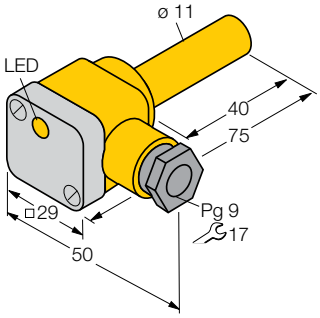

gs in drawings

d298

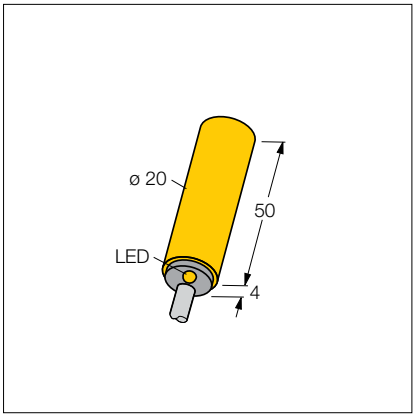

d301

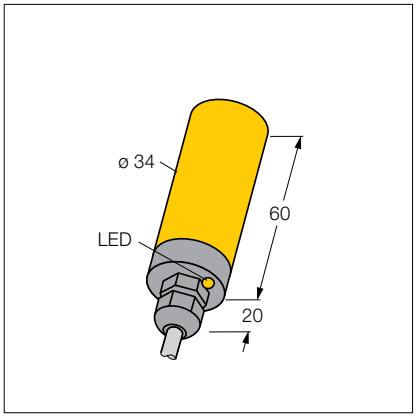

d304

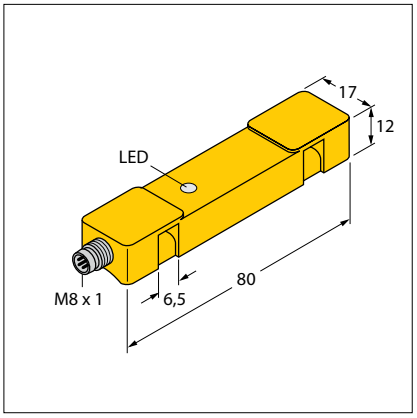

d299

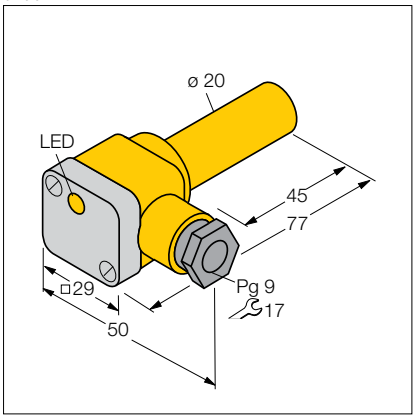

d302

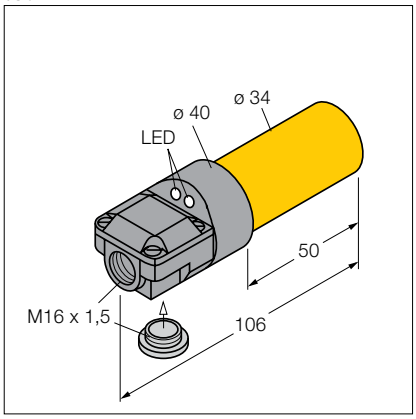

d305

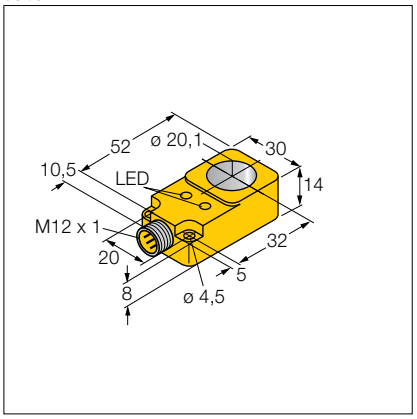

d300

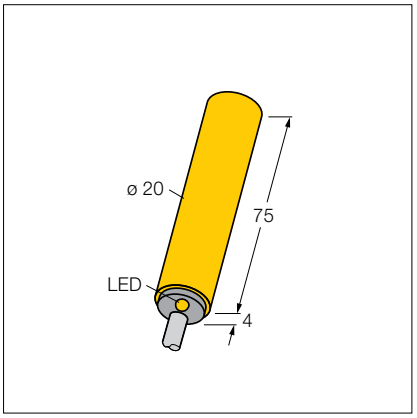

d303

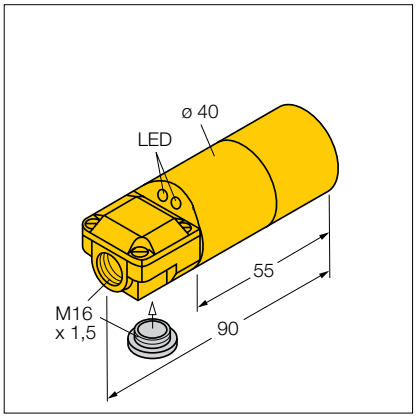

d306

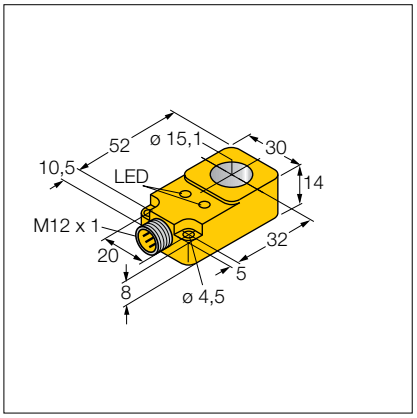

Dimension drawings

d307

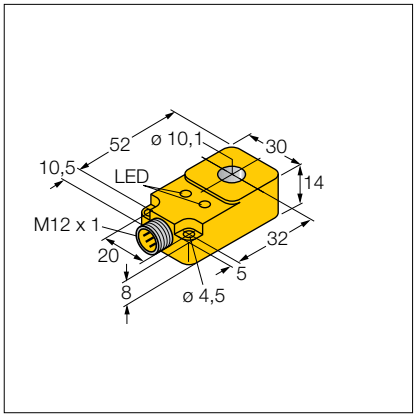

d310

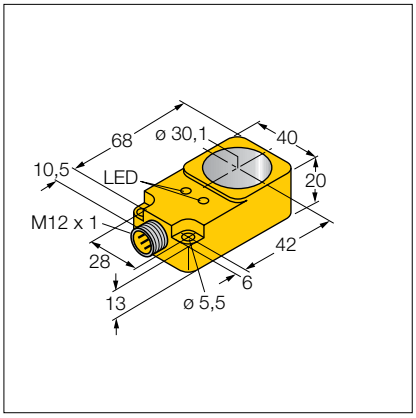

d313

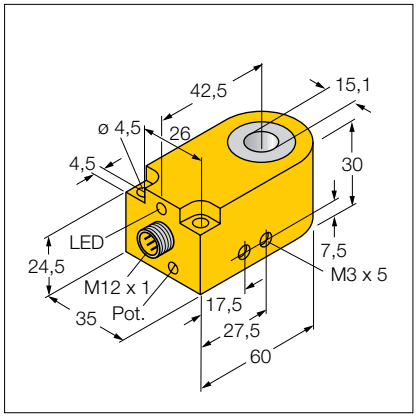

d308

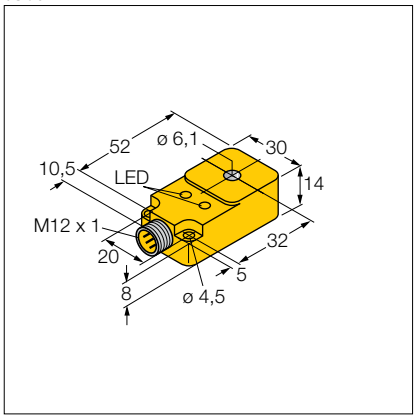

d311

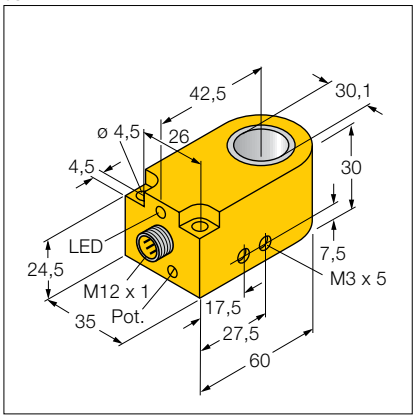

d314

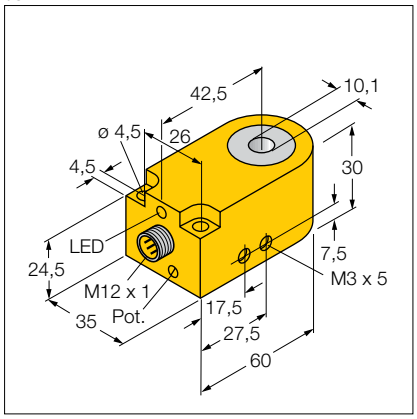

d309

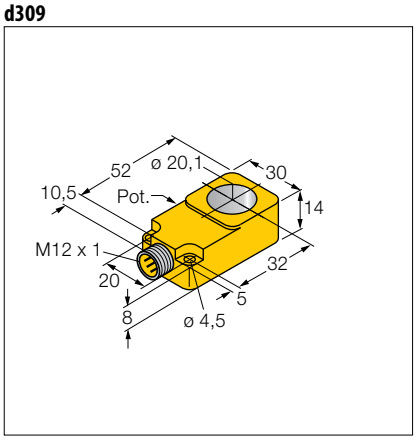

d312

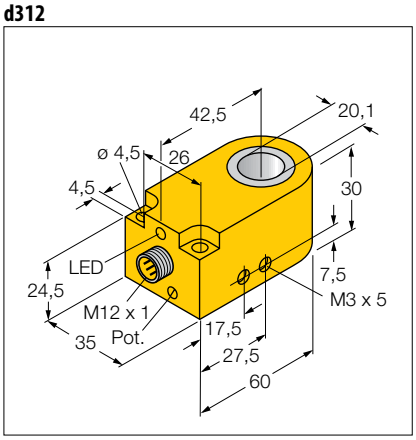

d315

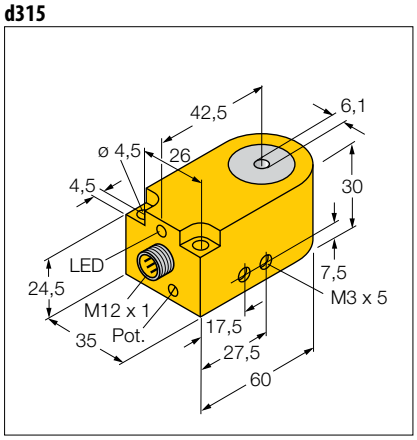

Hans Turck GmbH & Co. KG ▪ Tel. +49 208 49 52-0 ▪ Fax +49 208 49 52-264

gs in drawings

d316

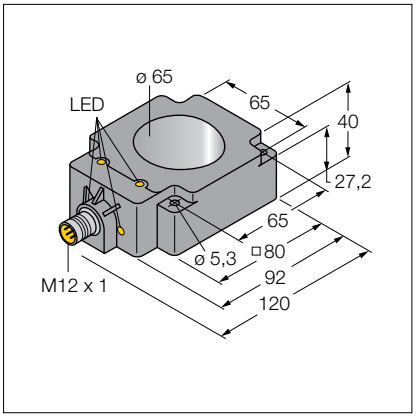

d319

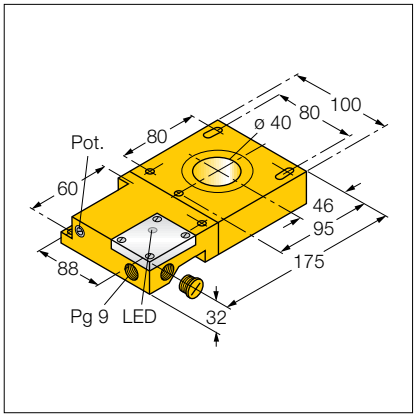

d322

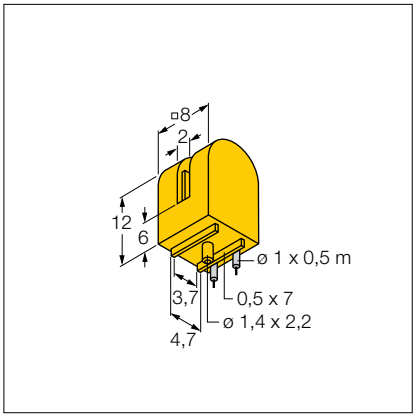

d317

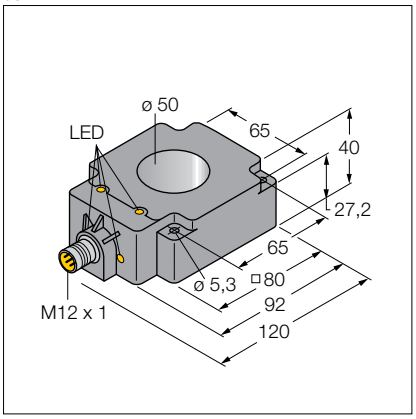

d320

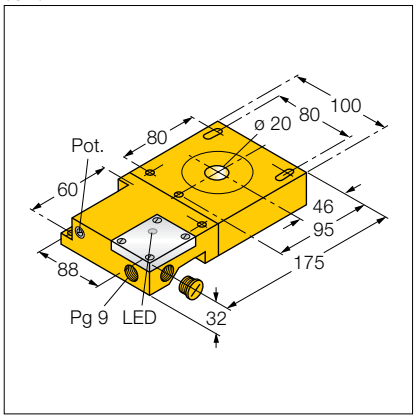

d323

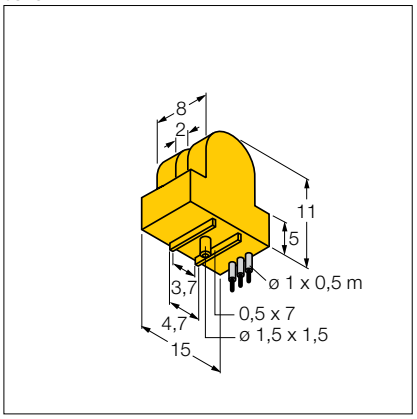

d318

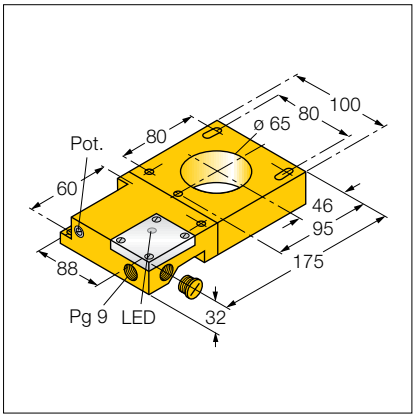

d321

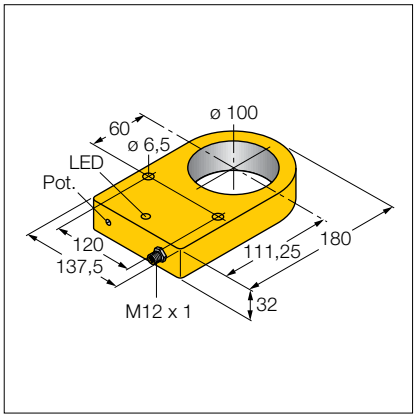

d324

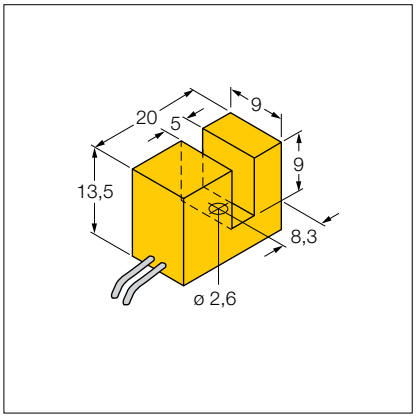

Dimension drawings

d325

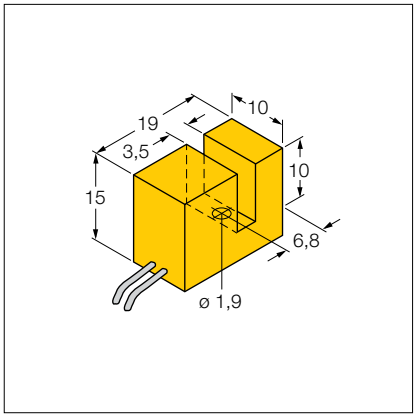

d328

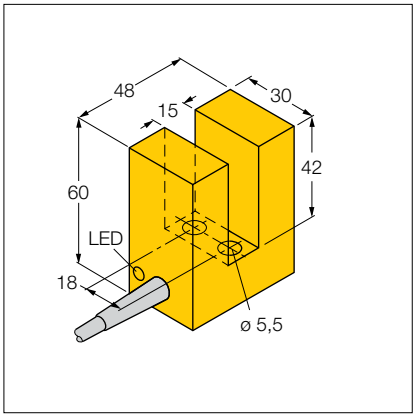

d331

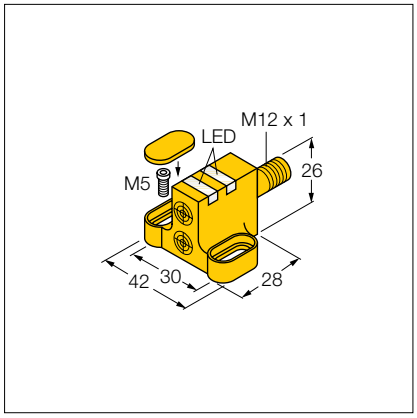

d326

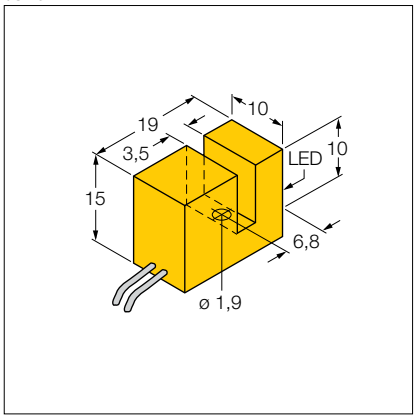

d329

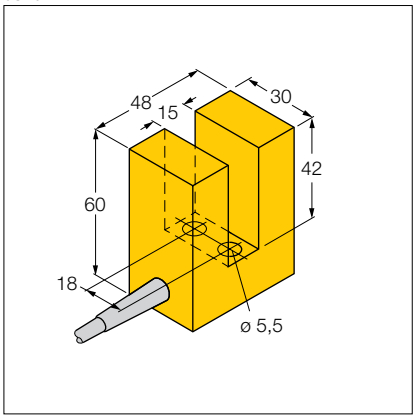

d332

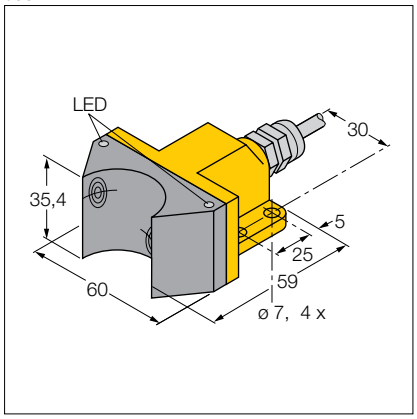

d327

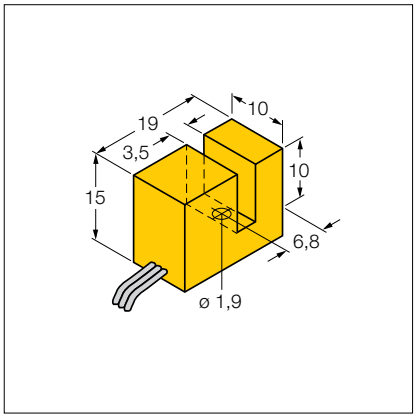

d330

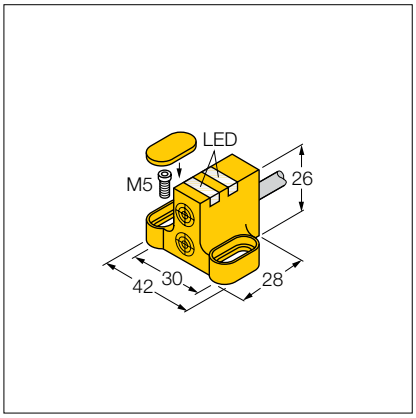

d333

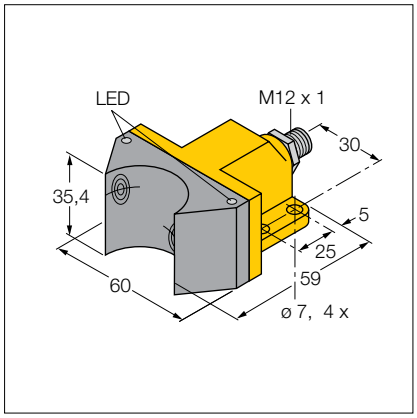

Hans Turck GmbH & Co. KG ▪ Tel. +49 208 49 52-0 ▪ Fax +49 208 49 52-264

gs in drawings

d334

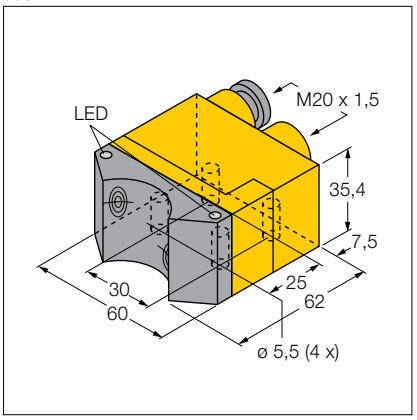

d337

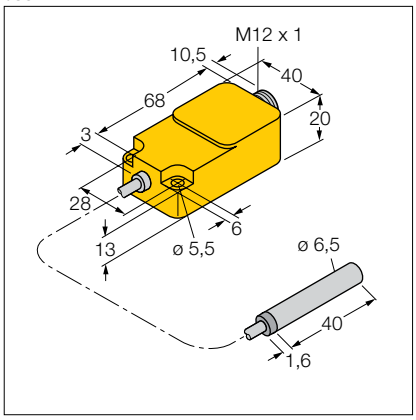

d340

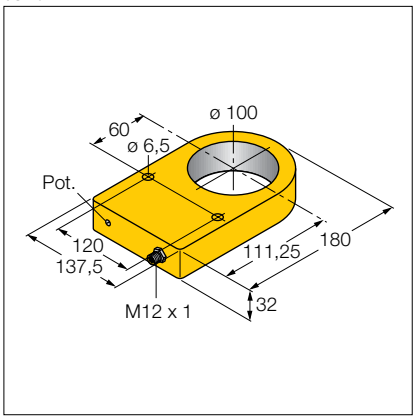

d335

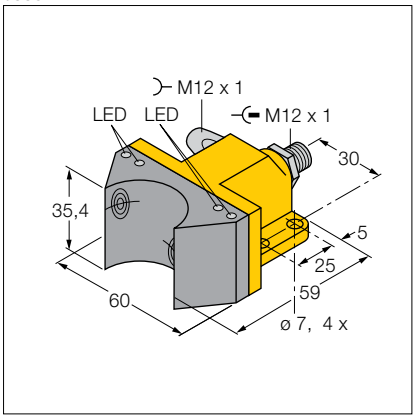

d338

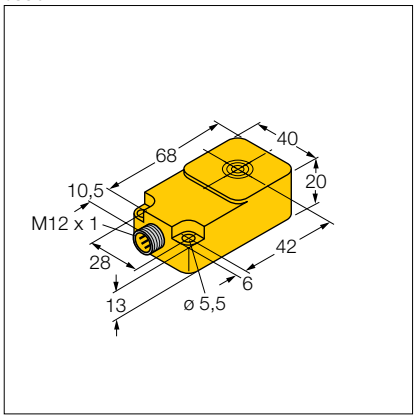

d341

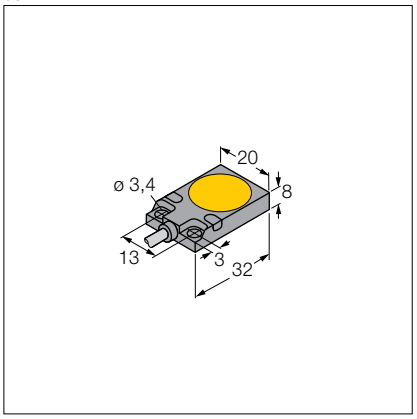

d336

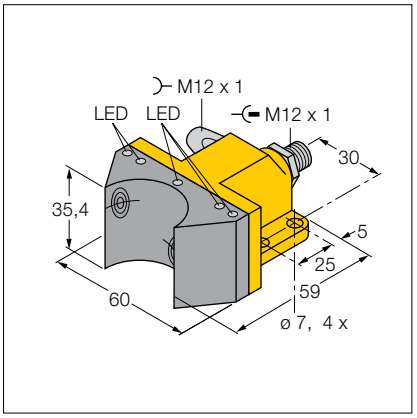

d339

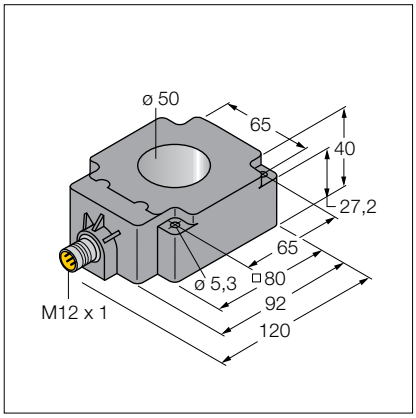

d342

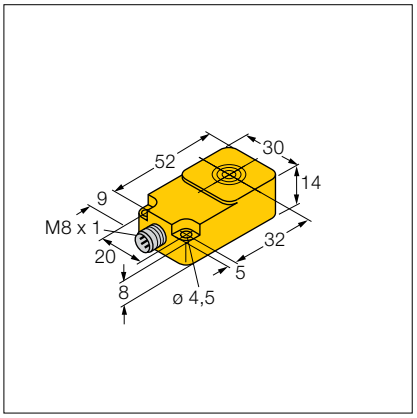

Dimension drawings

d343

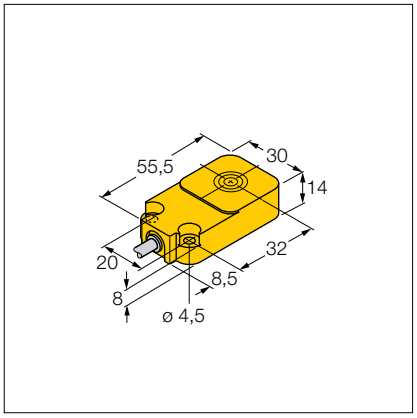

d346

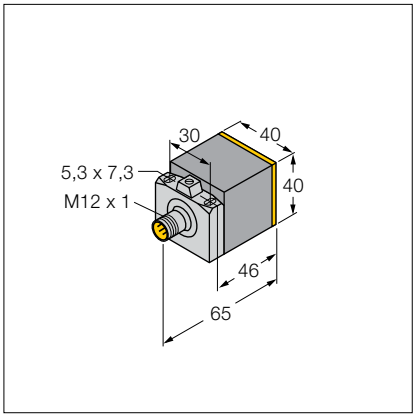

d349

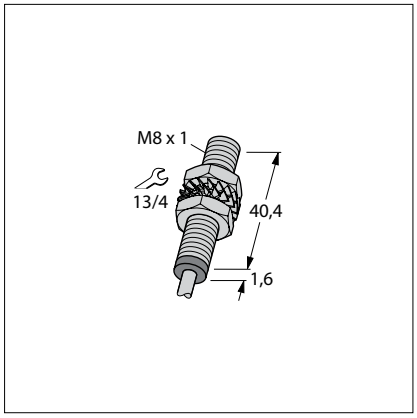

d344

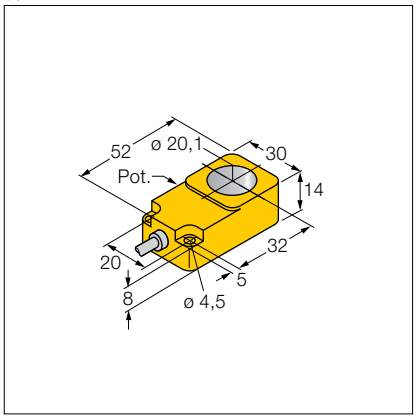

d347

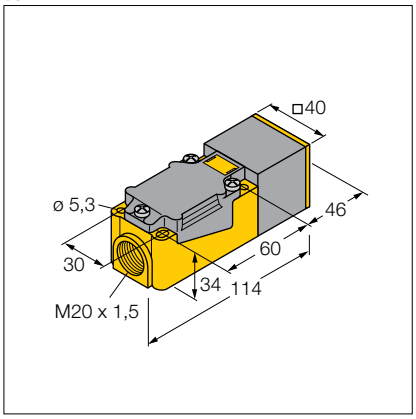

d350

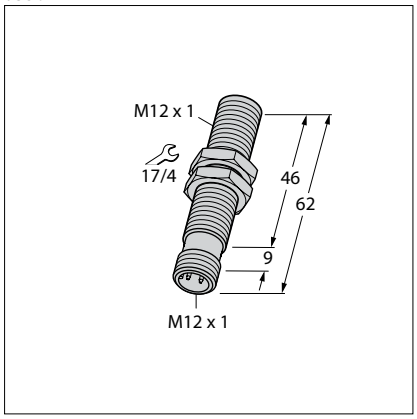

d345

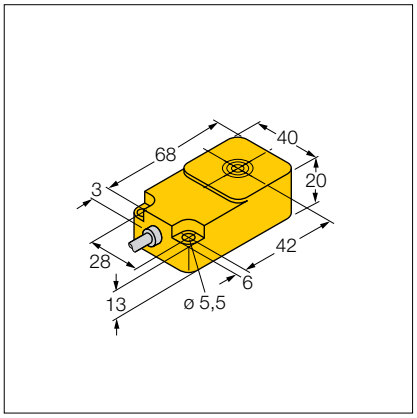

d348

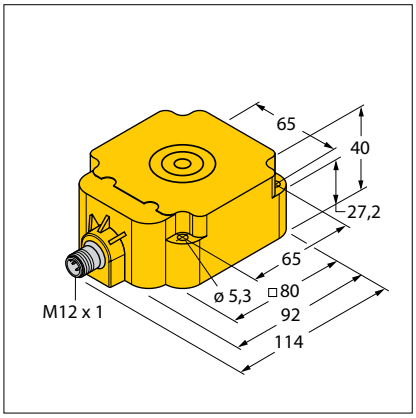

d351

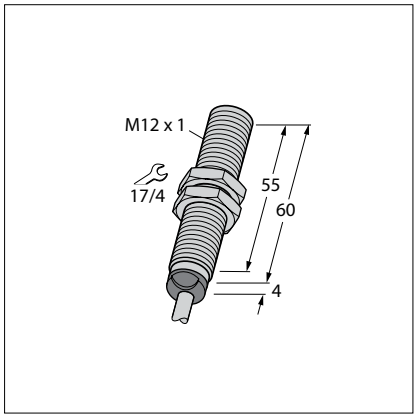

Hans Turck GmbH & Co. KG ▪ Tel. +49 208 49 52-0 ▪ Fax +49 208 49 52-264

gs in drawings

d352

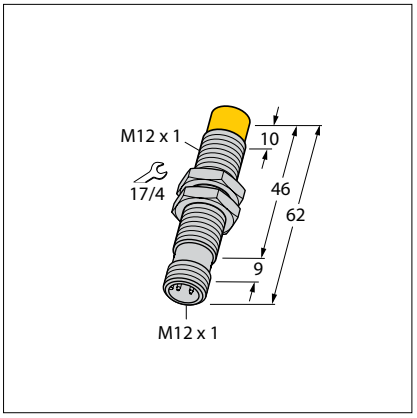

d355

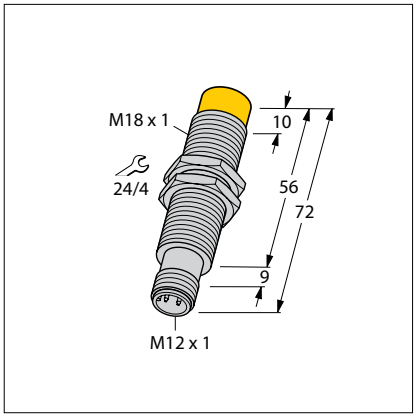

d358

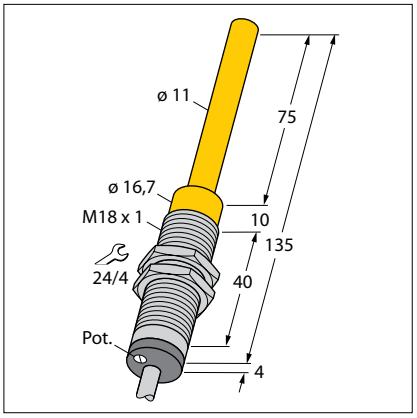

d353

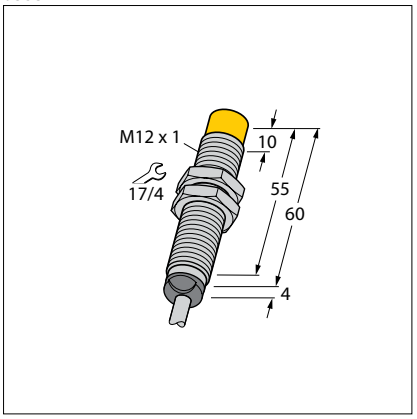

d356

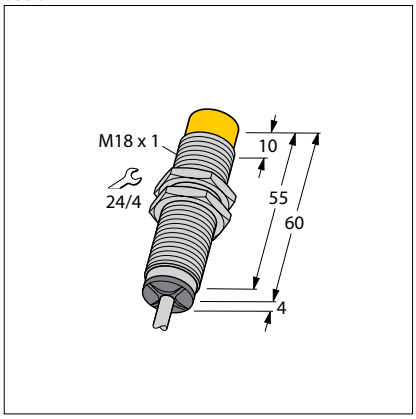

d359

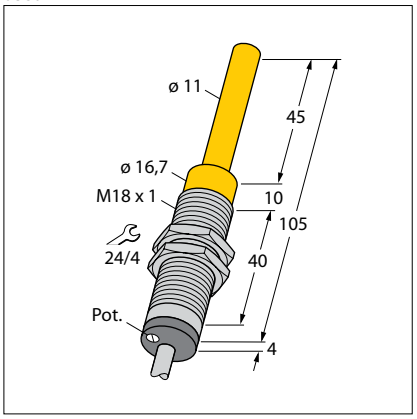

d354

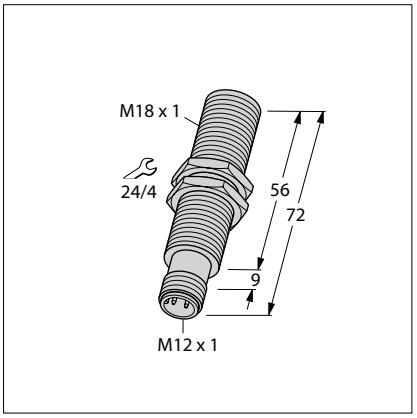

d357

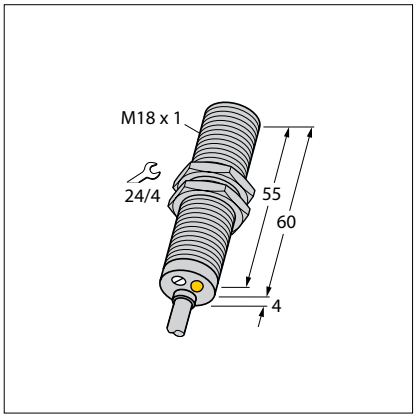

d360

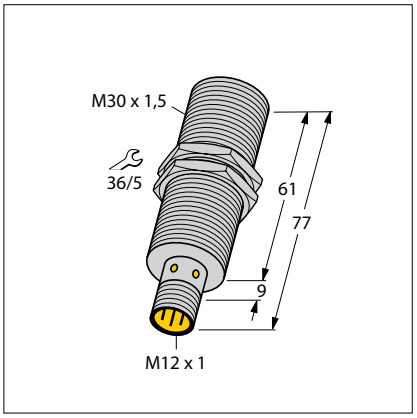

Dimension drawings

d361

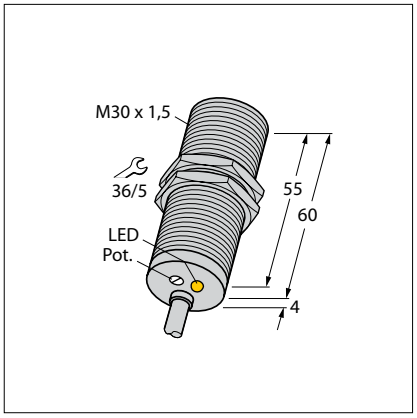

d364

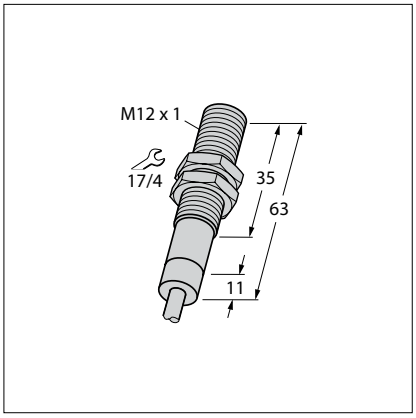

d367

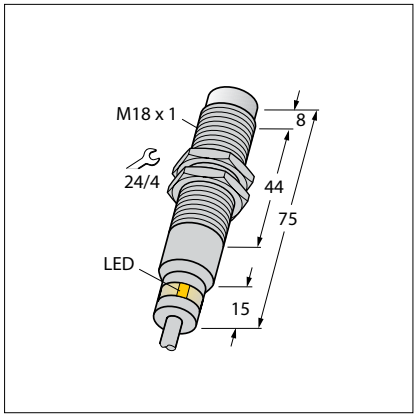

d362

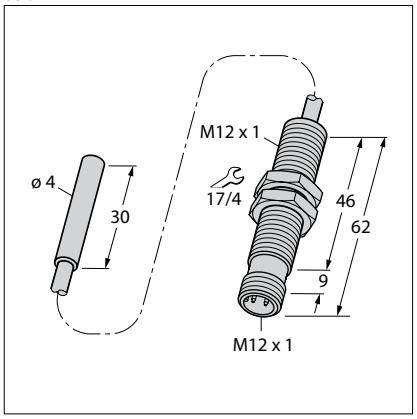

d365

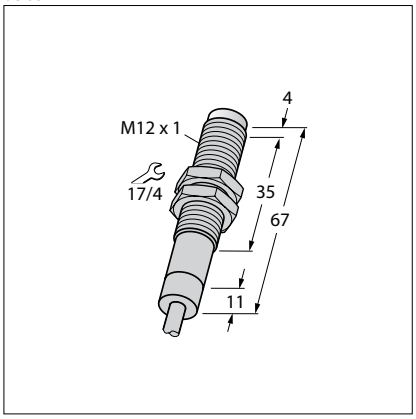

d368

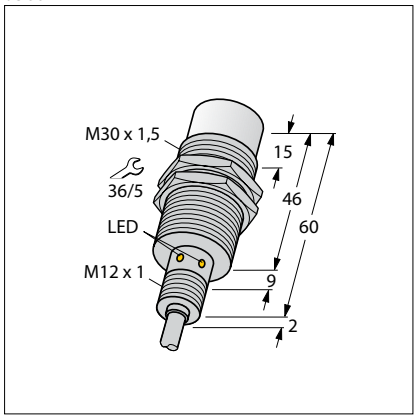

d363

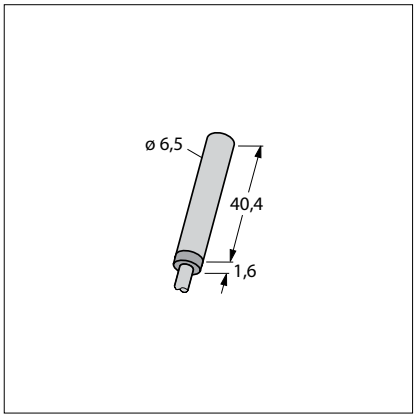

d366

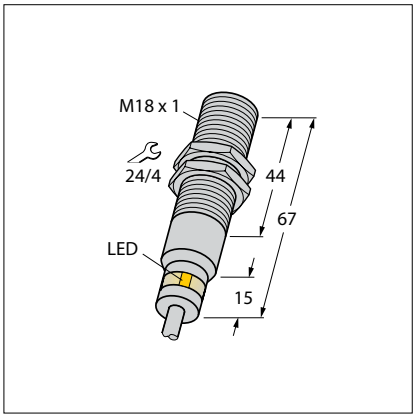

d369

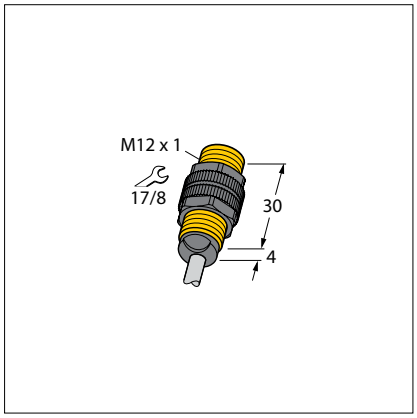

Hans Turck GmbH & Co. KG ▪ Tel. +49 208 49 52-0 ▪ Fax +49 208 49 52-264

gs in drawings

d370

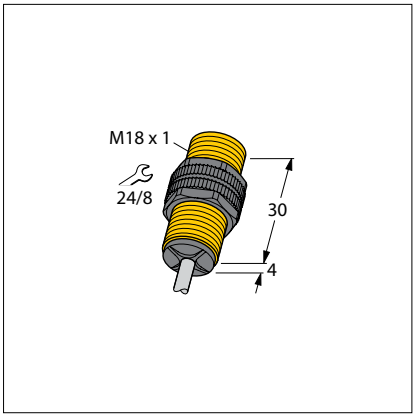

d373

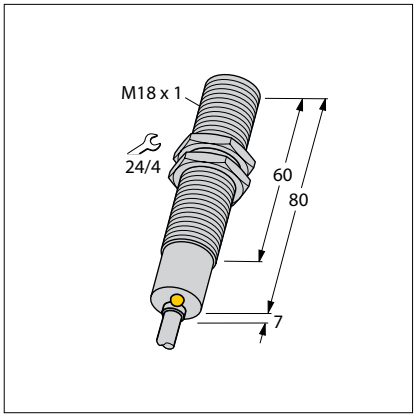

d376

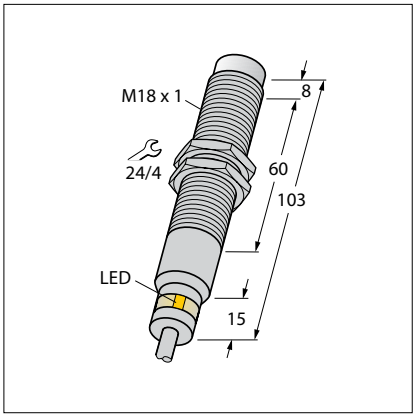

d371

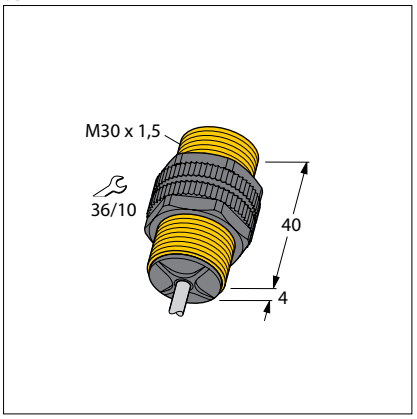

d374

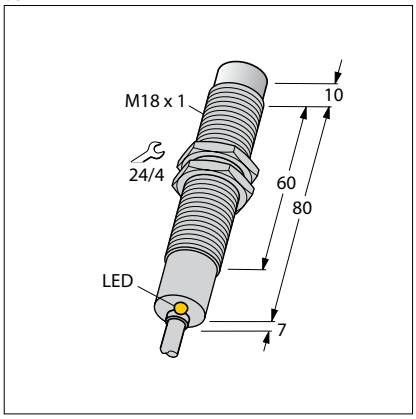

d377

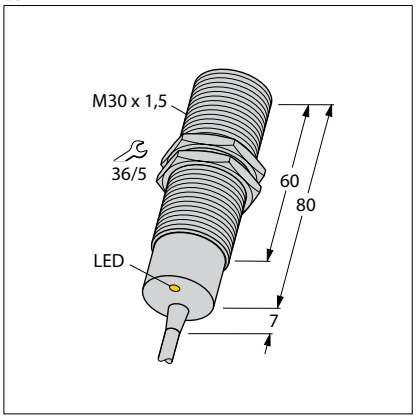

d372

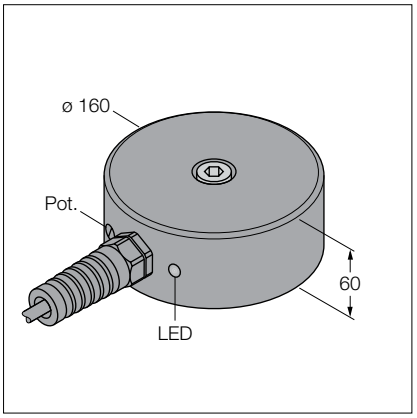

d375

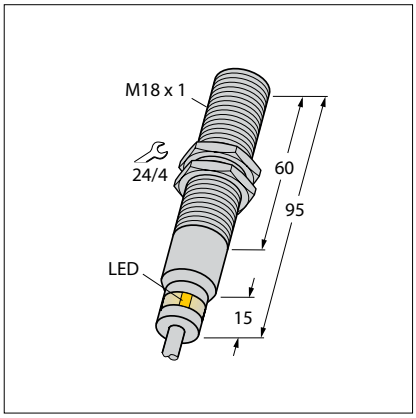

d378

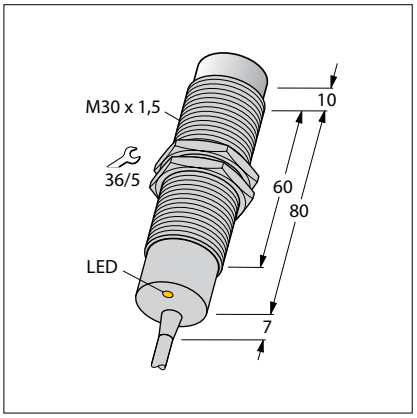

Dimension drawings

d379

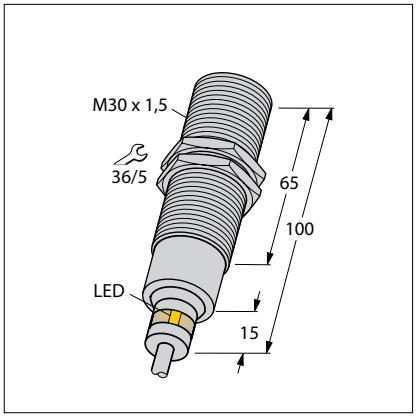

d382

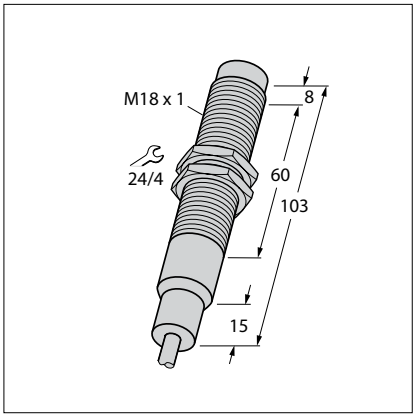

d385

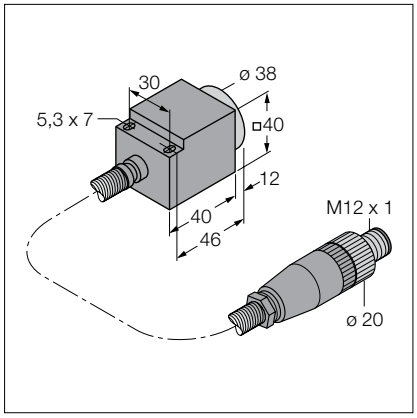

d380

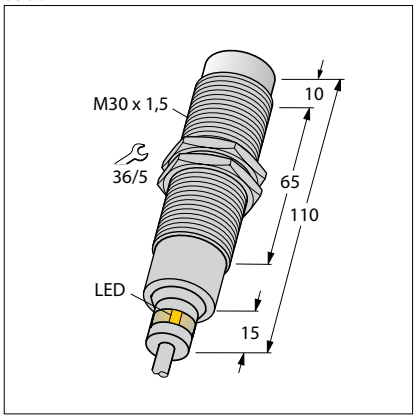

d383

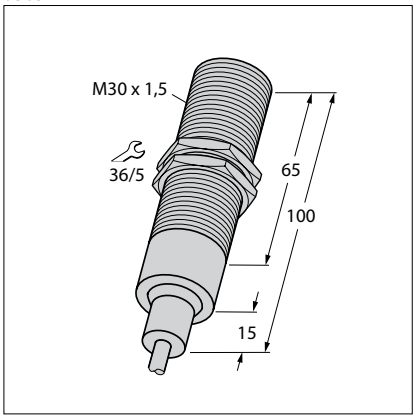

d386

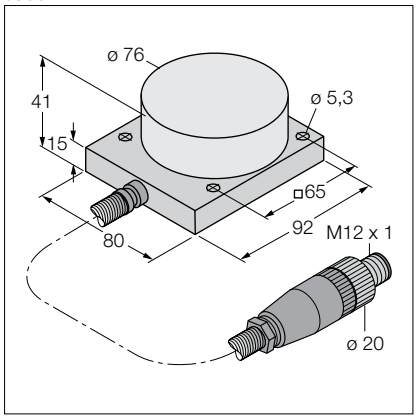

d381

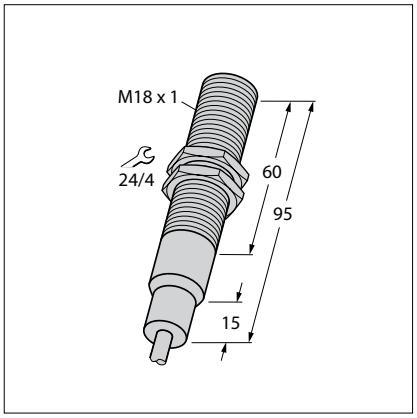

d384

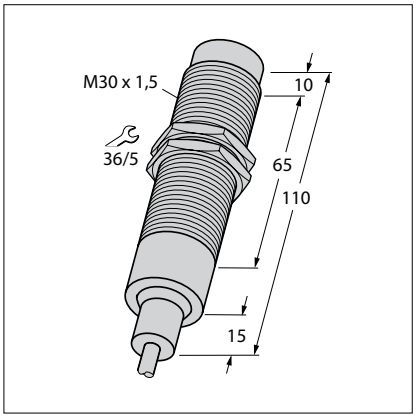

d387

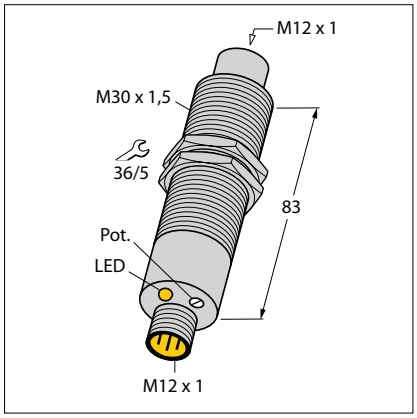

Hans Turck GmbH & Co. KG ▪ Tel. +49 208 49 52-0 ▪ Fax +49 208 49 52-264

gs in drawings

d388

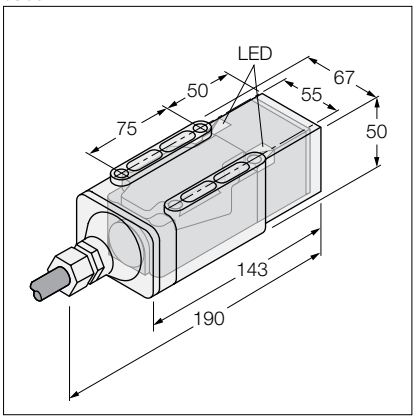

d391

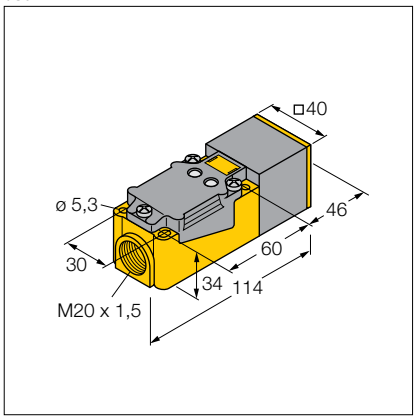

d394

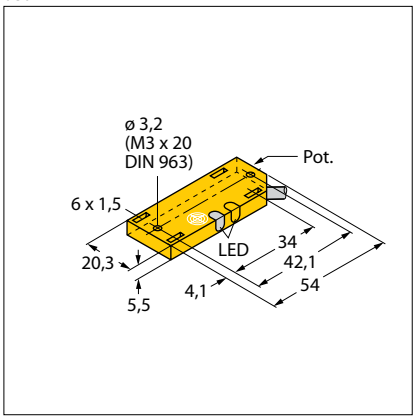

d389

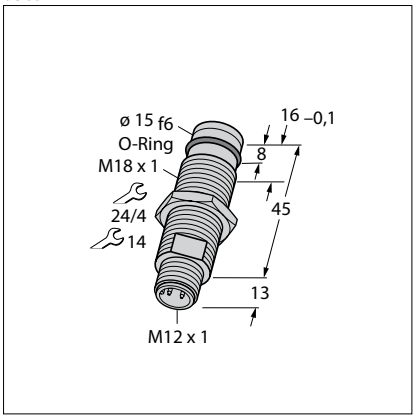

d392

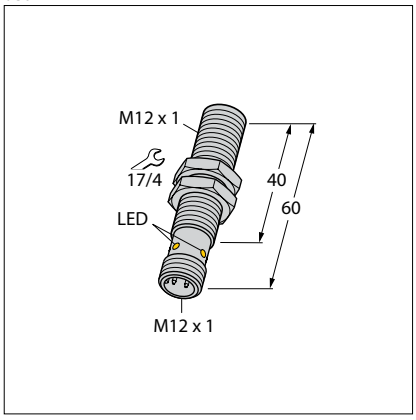

d395

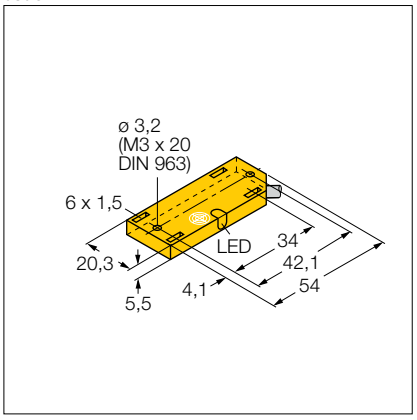

d390

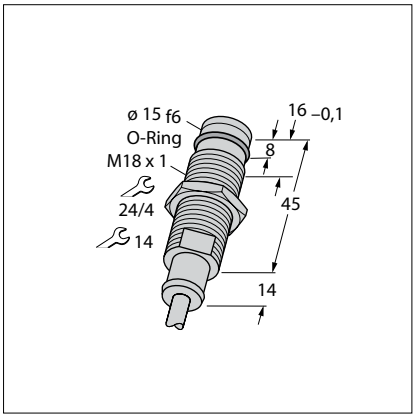

d393

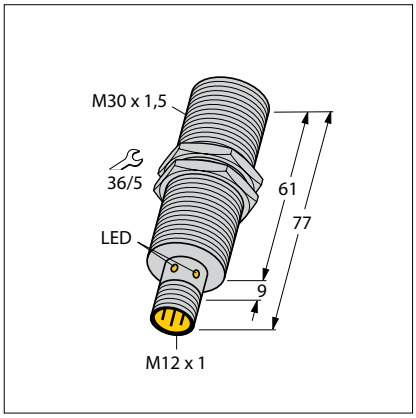

d396

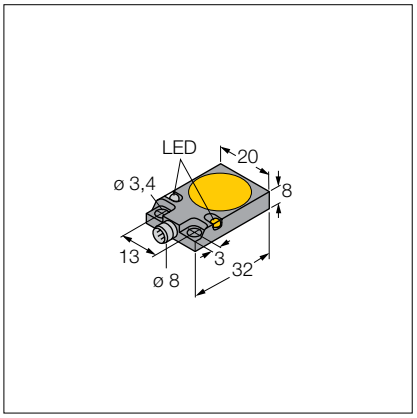

Dimension drawings

d397

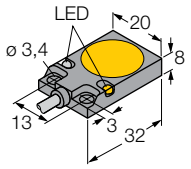

d400

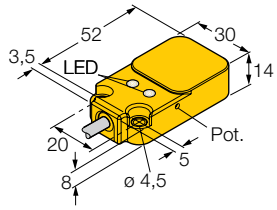

d403

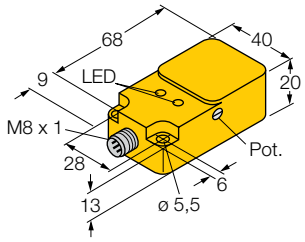

d398

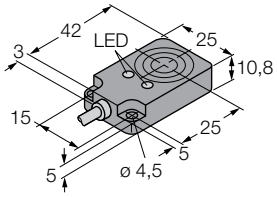

d401

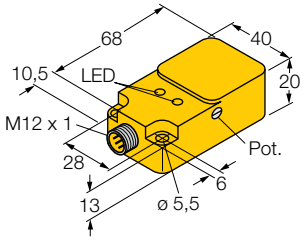

d404

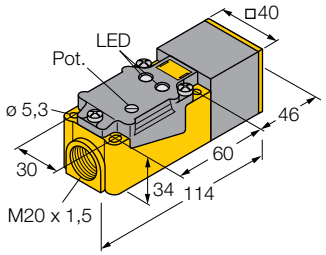

d399

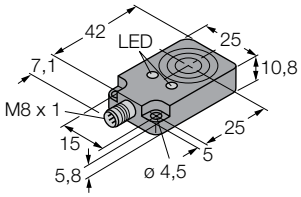

d402

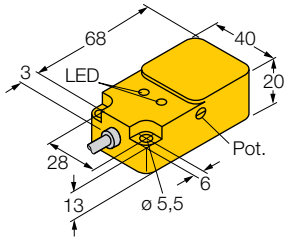

d405

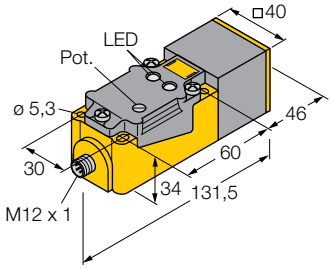

gs in drawings

d406

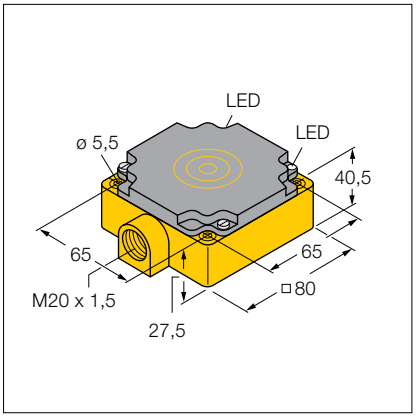

d409

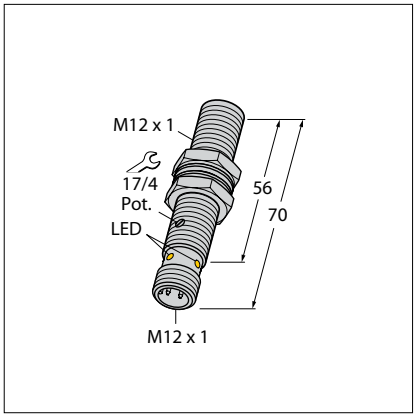

d412

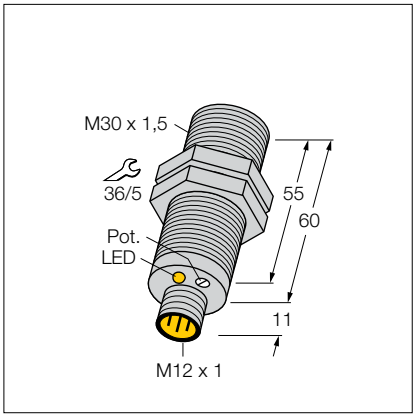

d407

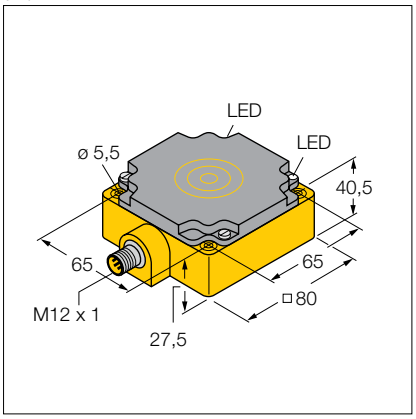

d410

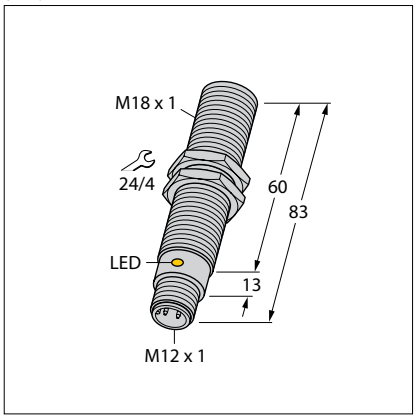

d413

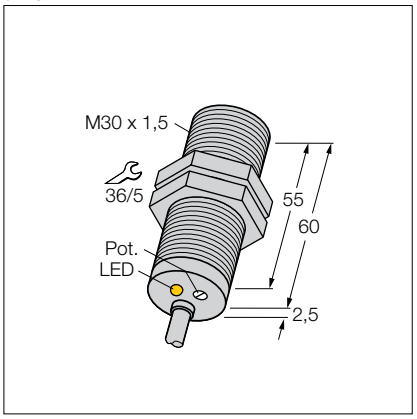

d408

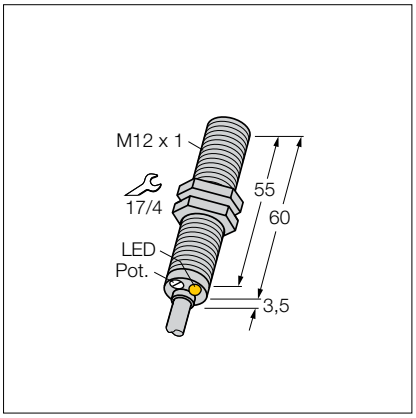

d411

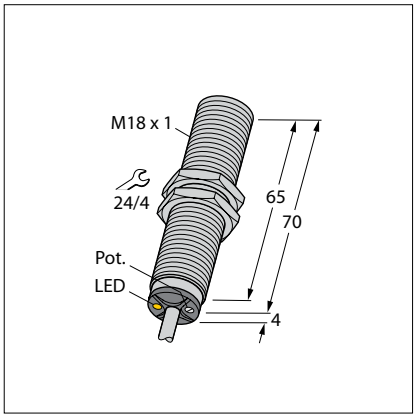

d414

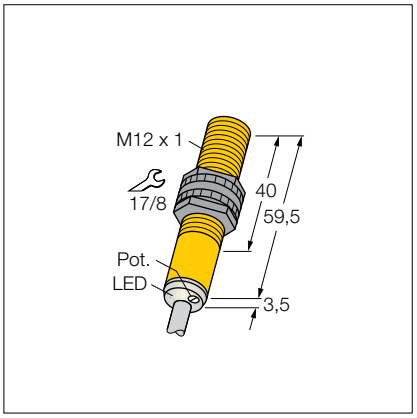

Dimension drawings

d415

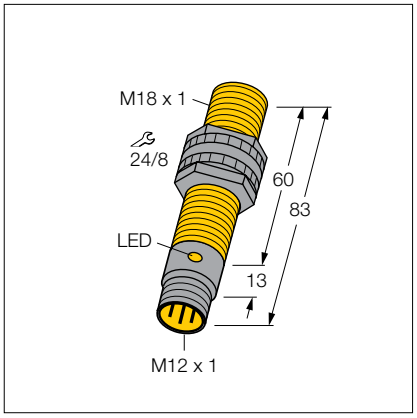

d418

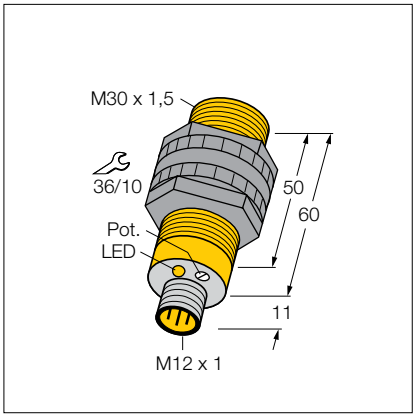

d421

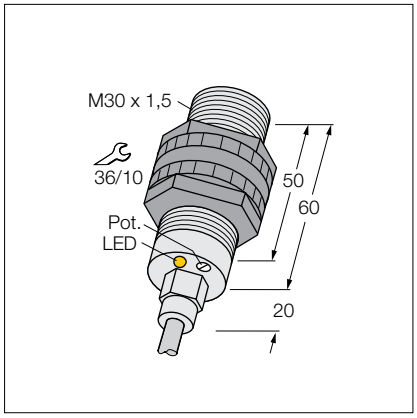

d416

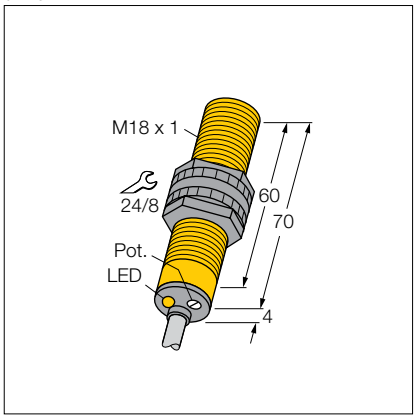

d419

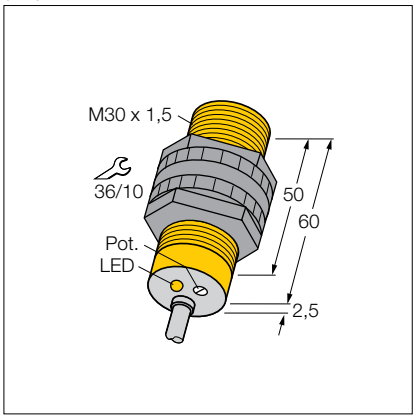

d422

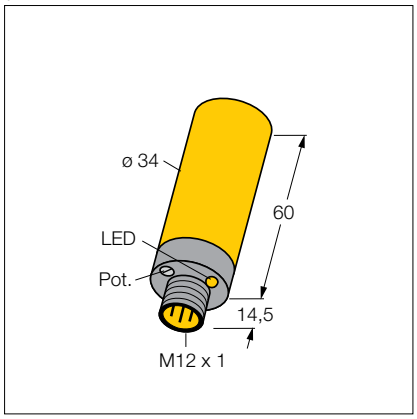

d417

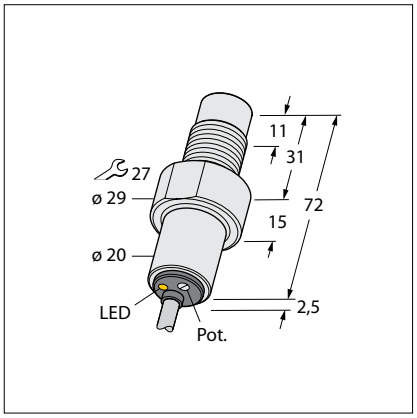

d420

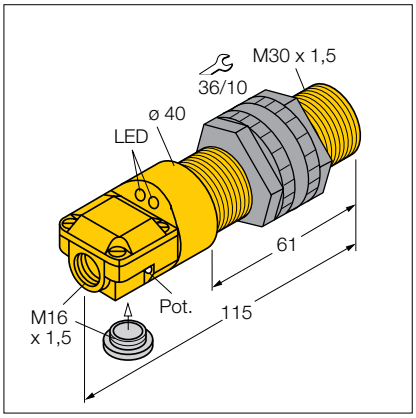

d423

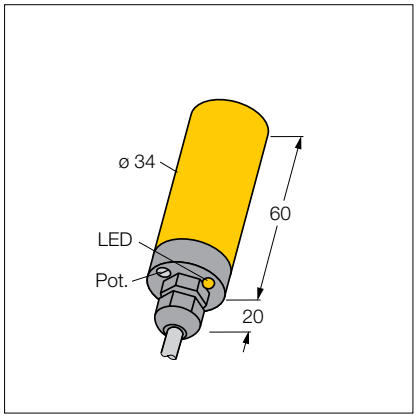

Hans Turck GmbH & Co. KG ▪ Tel. +49 208 49 52-0 ▪ Fax +49 208 49 52-264

gs in drawings

d424

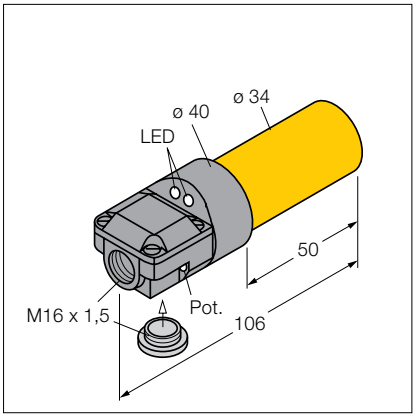

d427

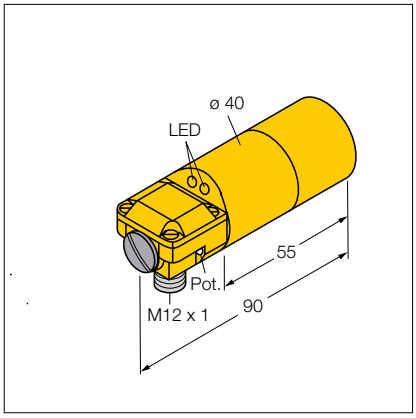

d430

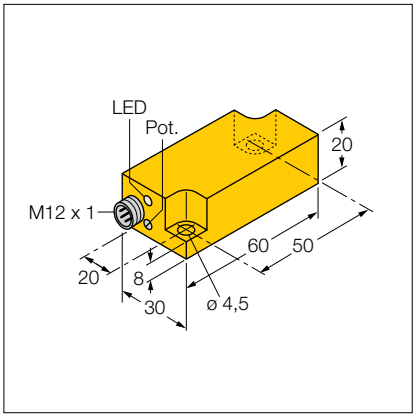

d425

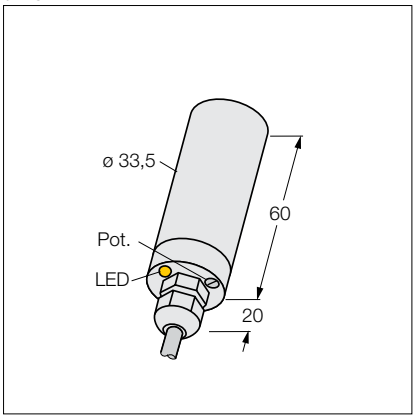

d428

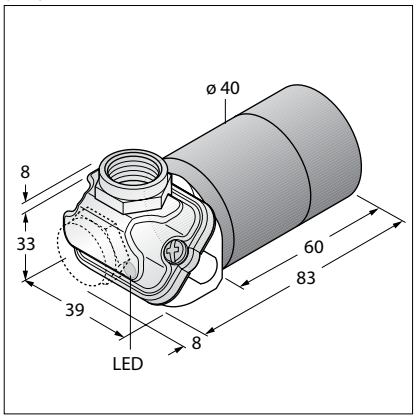

d431

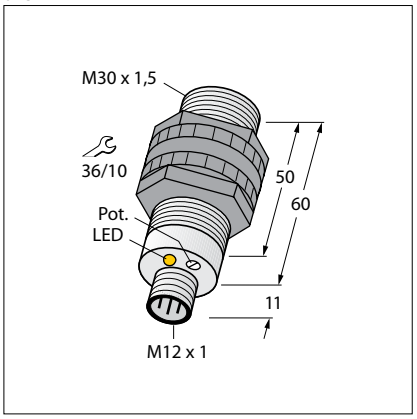

d426

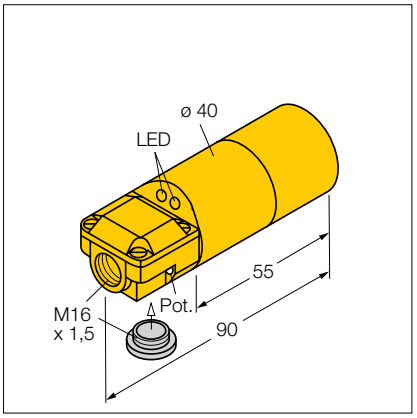

d429

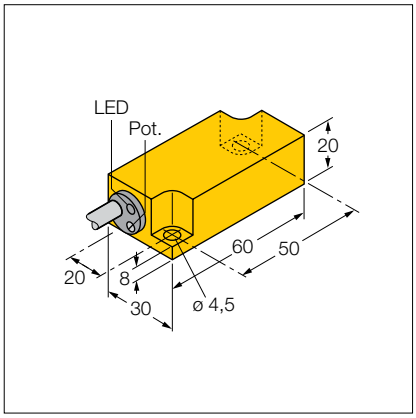

d432

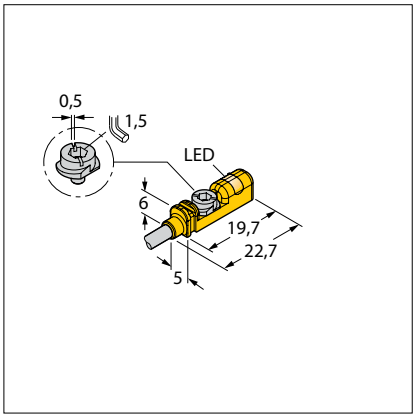

Dimension drawings

d433

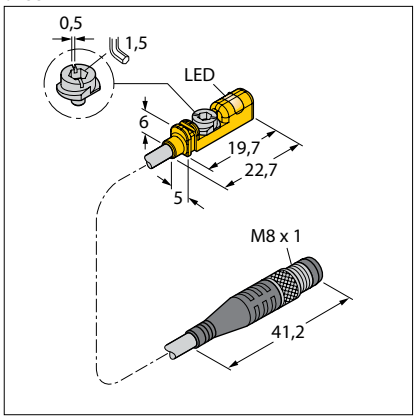

d436

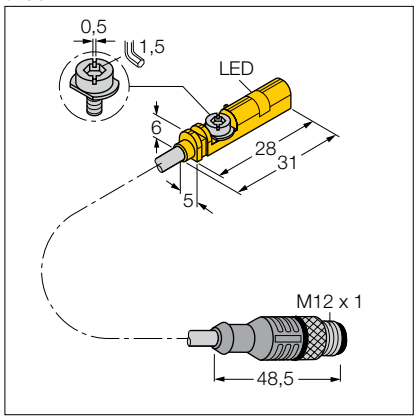

d439

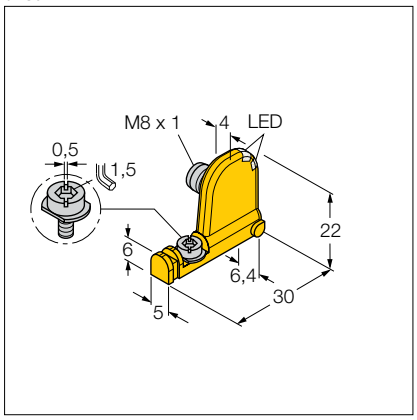

d434

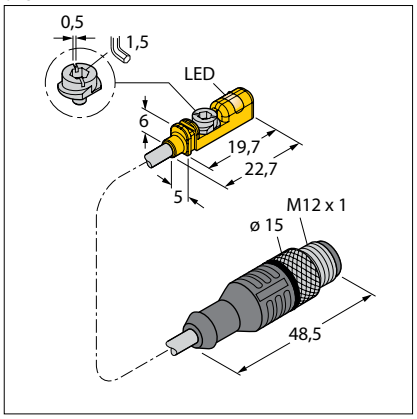

d437

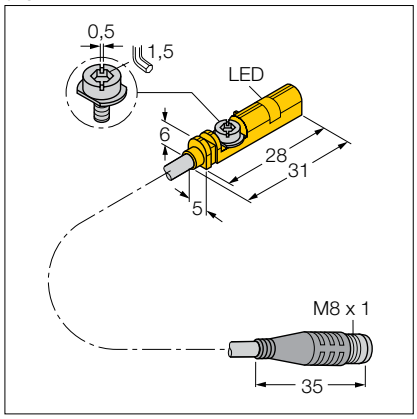

d440

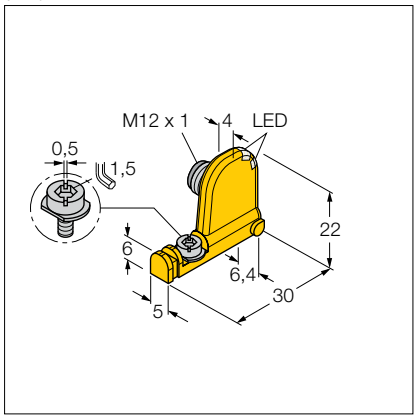

d435

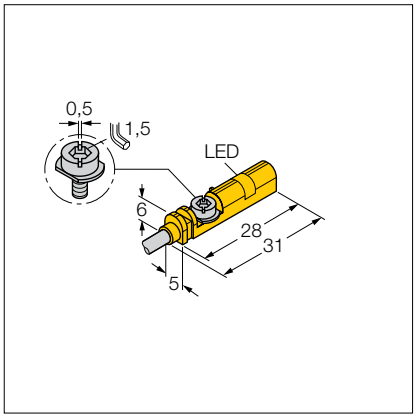

d438

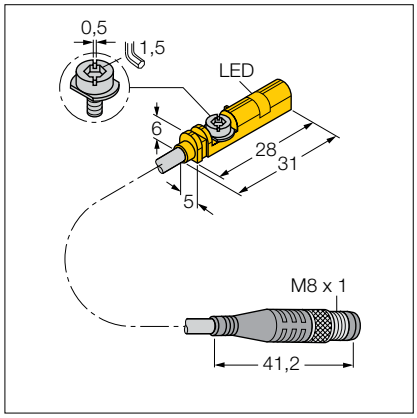

d441

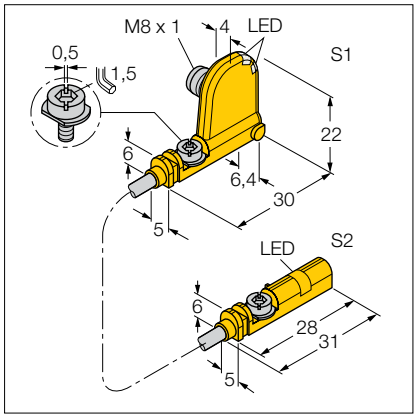

Hans Turck GmbH & Co. KG ▪ Tel. +49 208 49 52-0 ▪ Fax +49 208 49 52-264

gs in drawings

d442

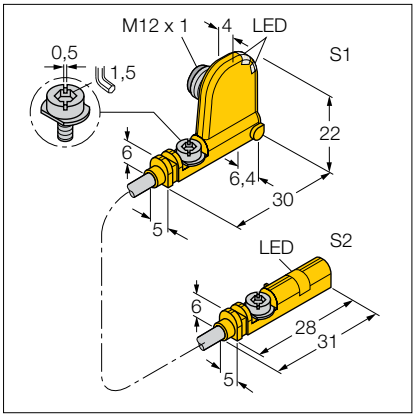

d445

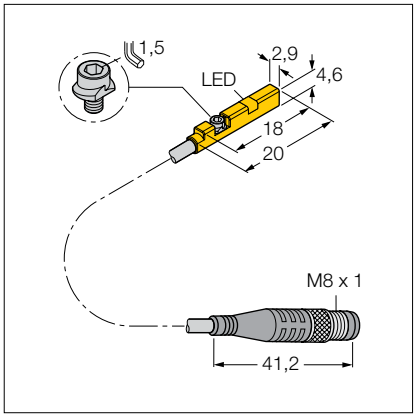

d448

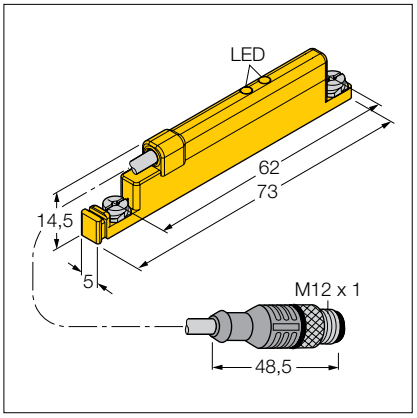

d443

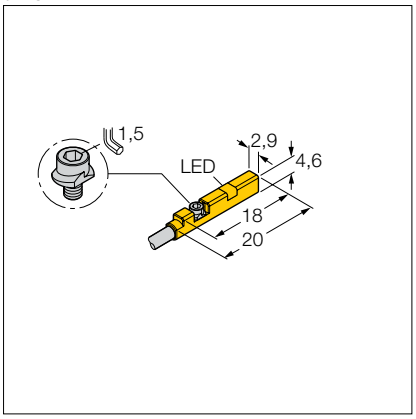

d446

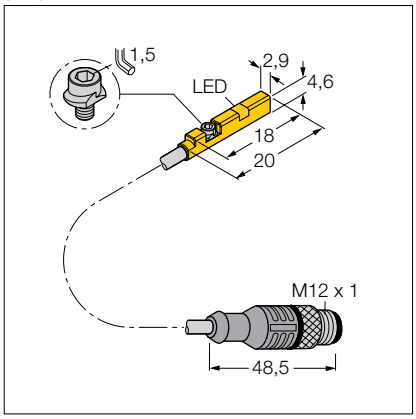

d449

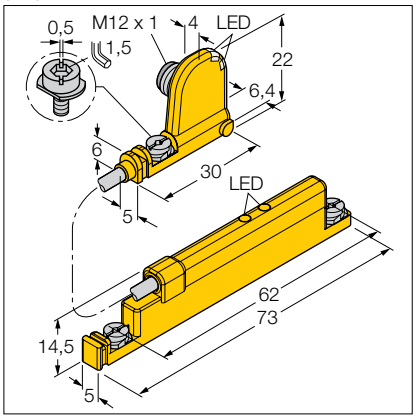

d444

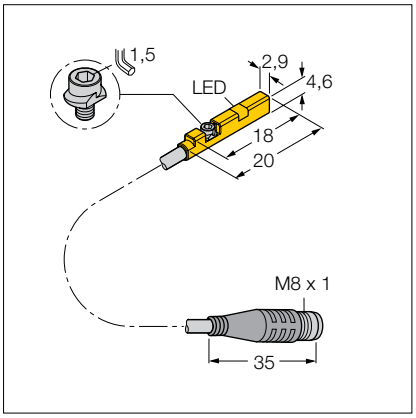

d447

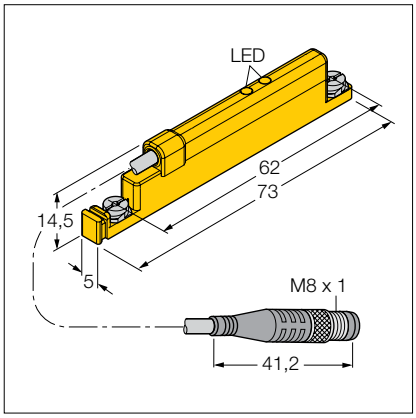

d450

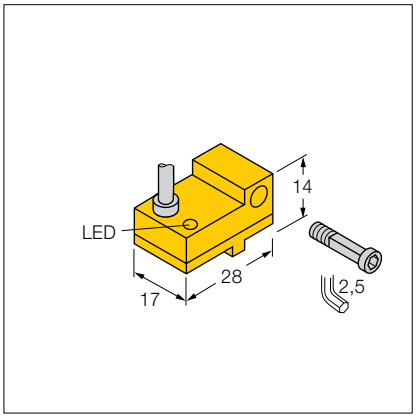

Dimension drawings

d451

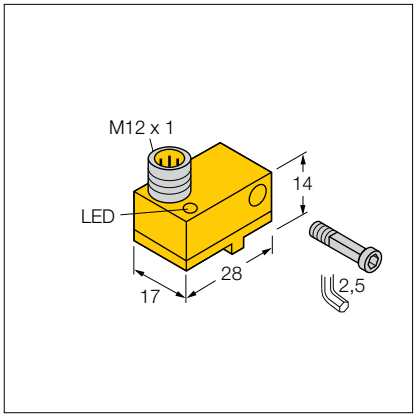

d454

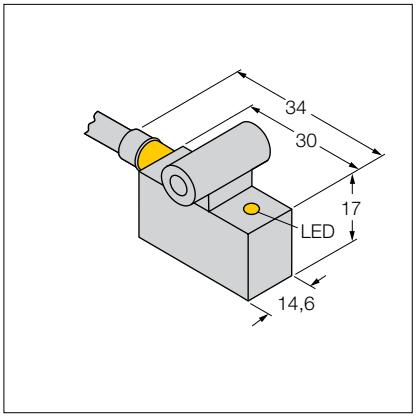

d457

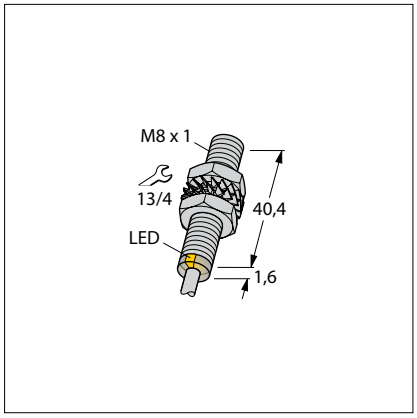

d452

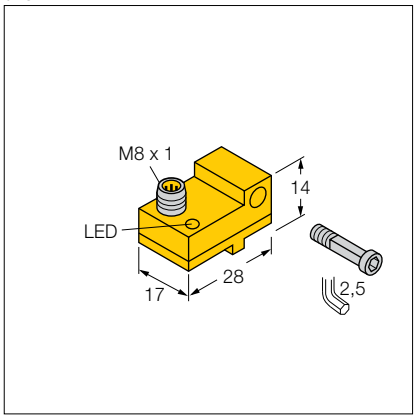

d455

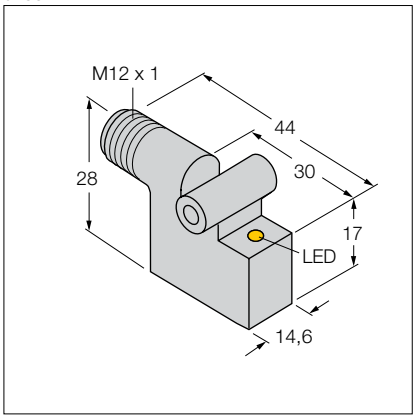

d458

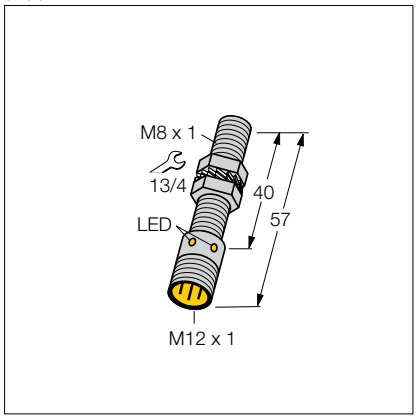

d453

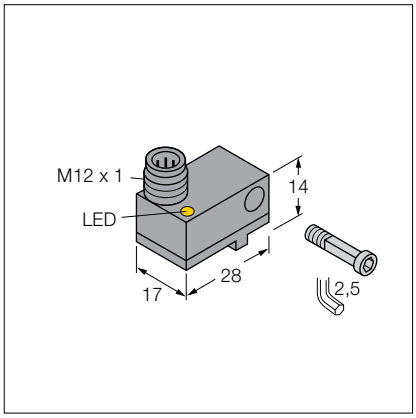

d456

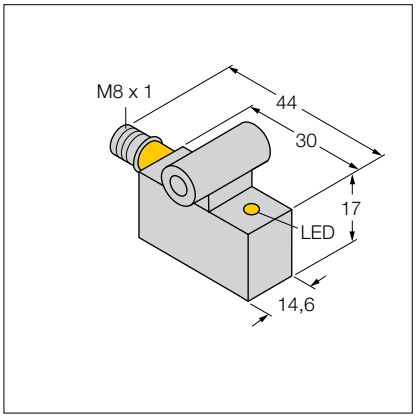

d459

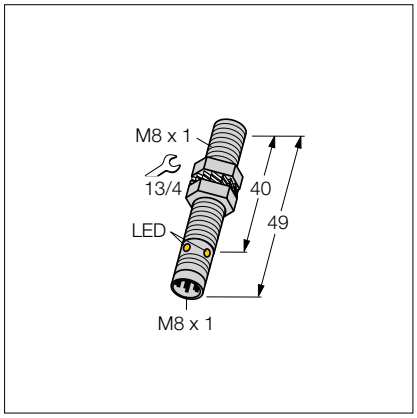

Hans Turck GmbH & Co. KG ▪ Tel. +49 208 49 52-0 ▪ Fax +49 208 49 52-264

gs
in drawings

d460

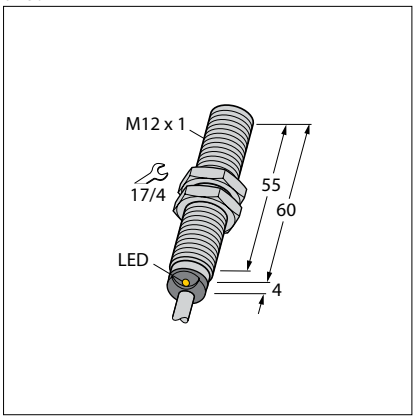

d463

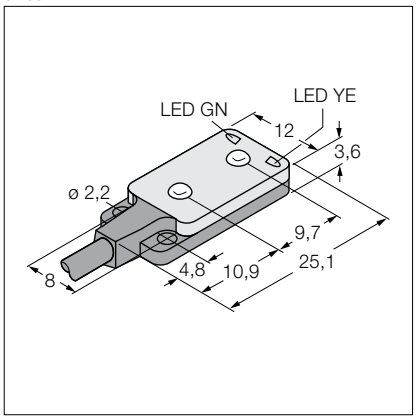

d466

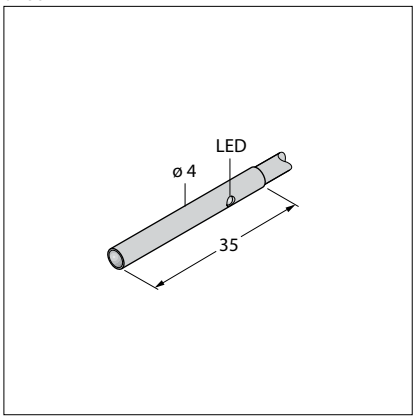

d461

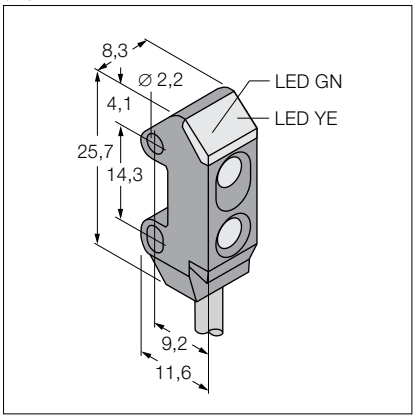

d464

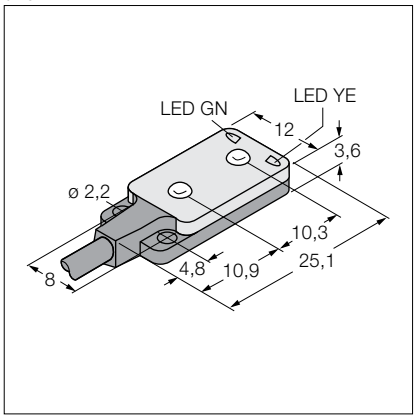

d467

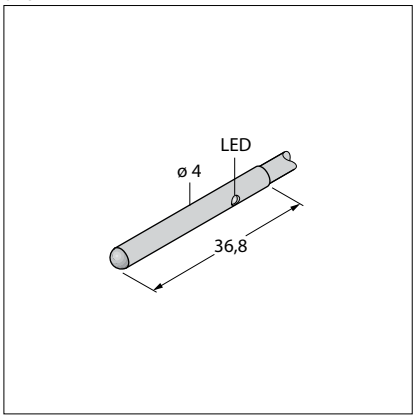

d462

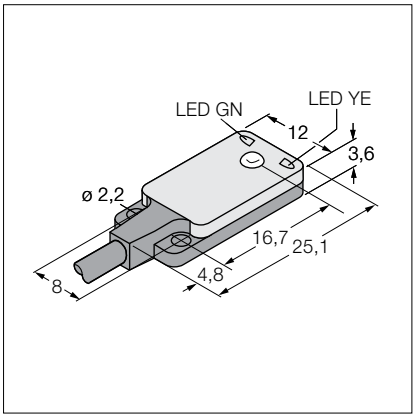

d465

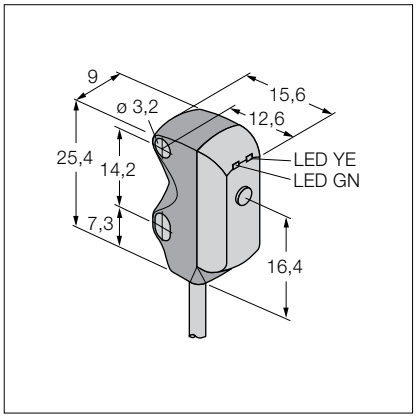

d468

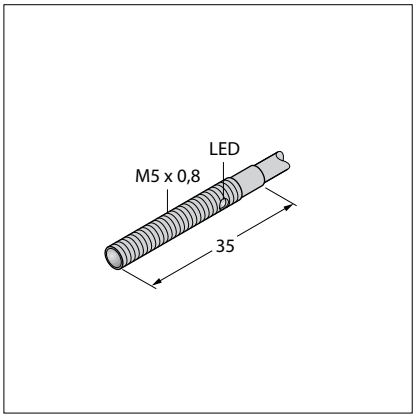

Dimension drawings

d469

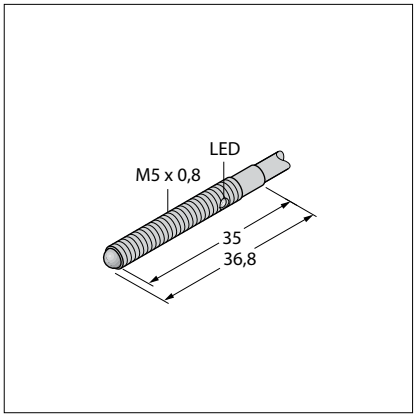

d472

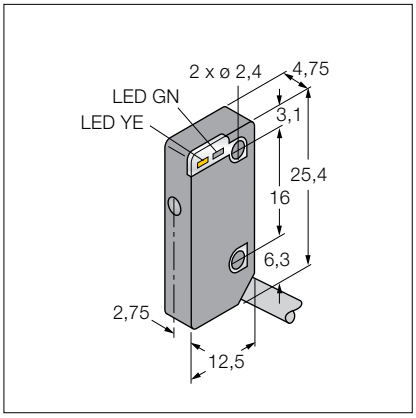

d475

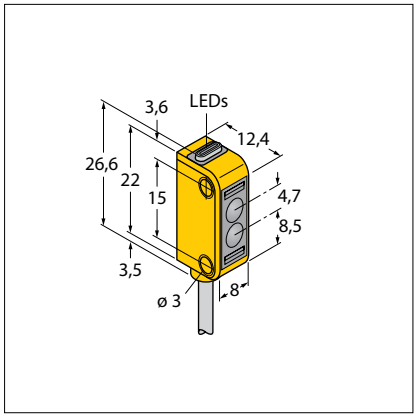

d470

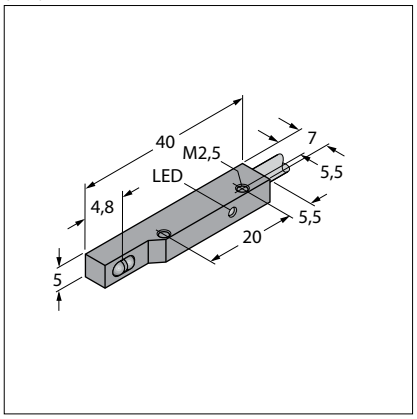

d473

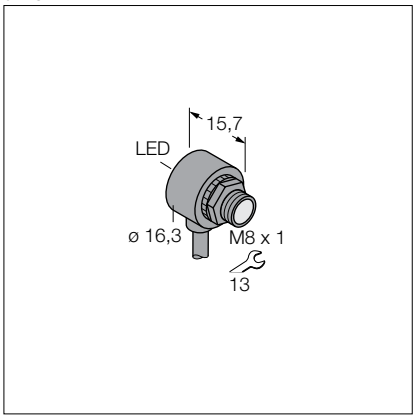

d476

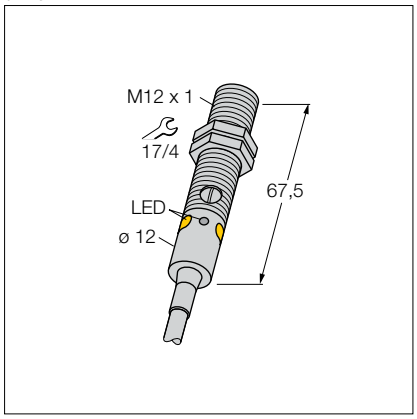

d471

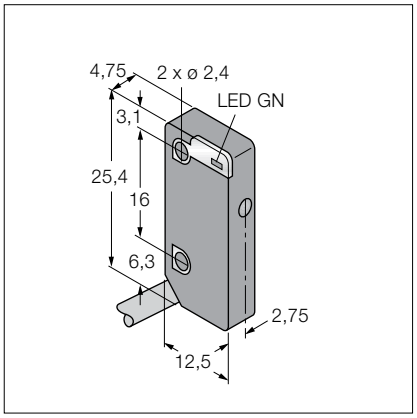

d474

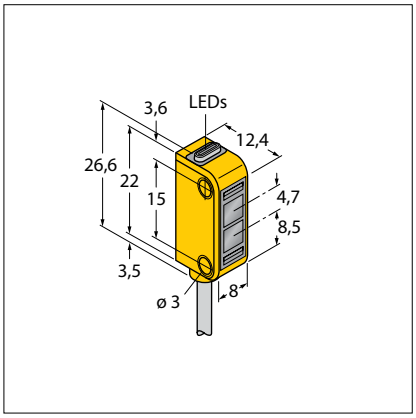

d477

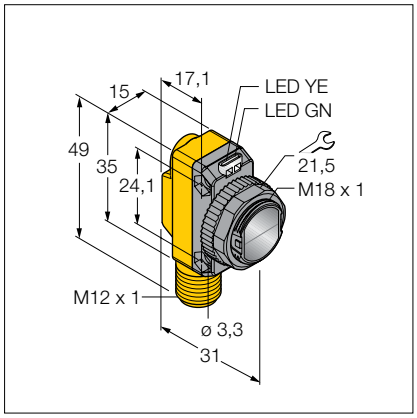

Hans Turck GmbH & Co. KG ▪ Tel. +49 208 49 52-0 ▪ Fax +49 208 49 52-264

gs in drawings

d478

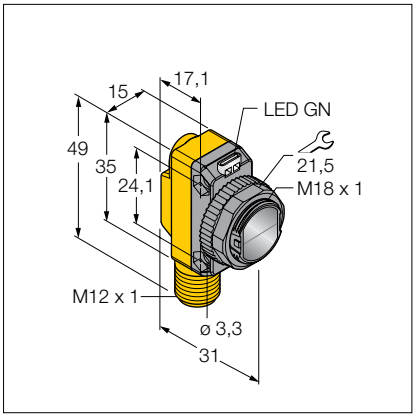

d481

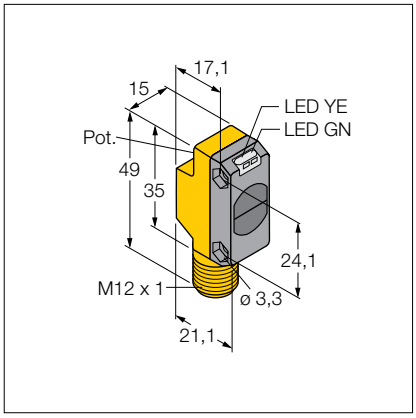

d484

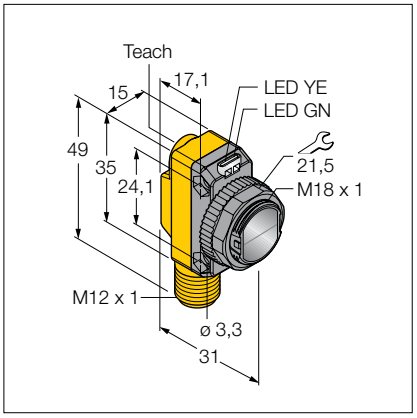

d479

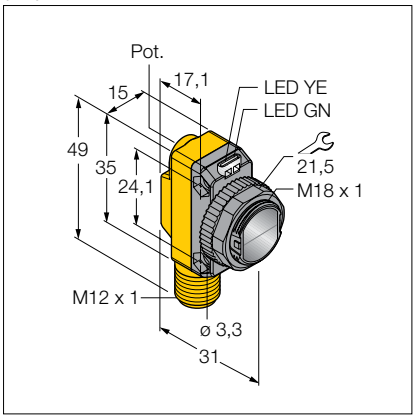

d482

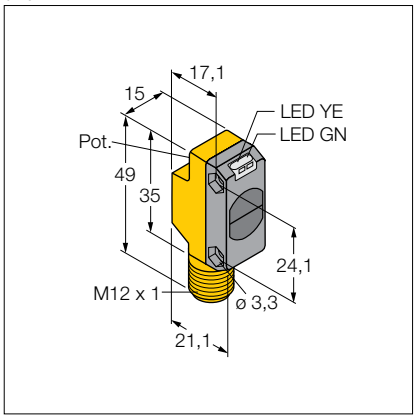

d485

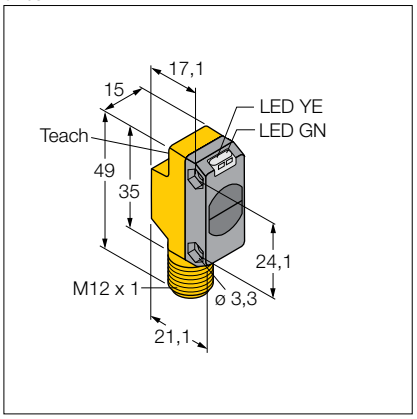

d480

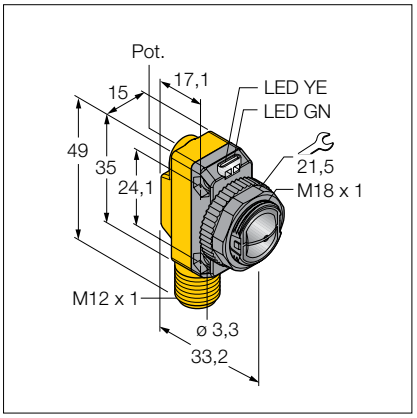

d483

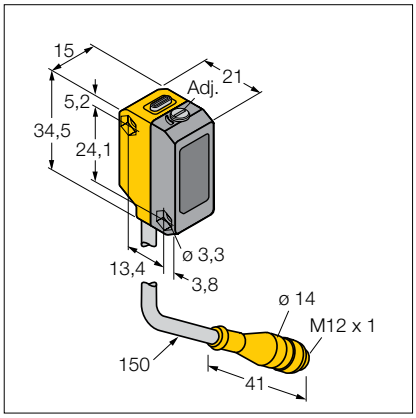

d486

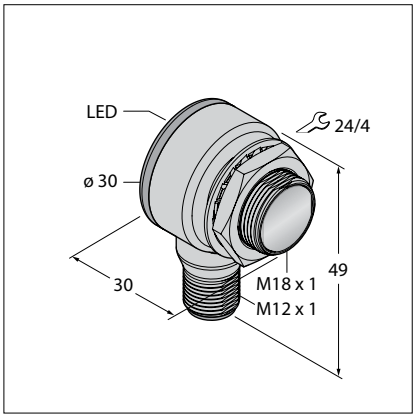

Dimension drawings

Dimension drawings

d487

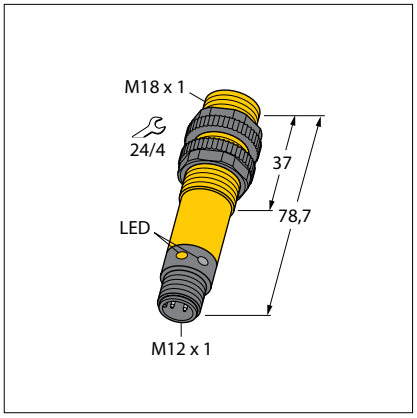

d490

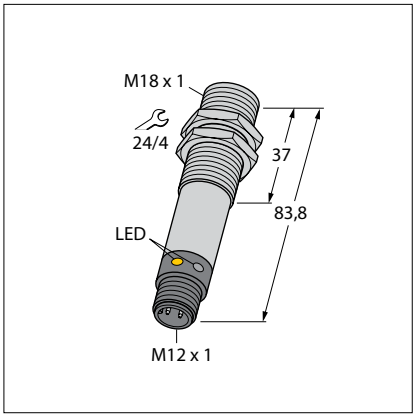

d493

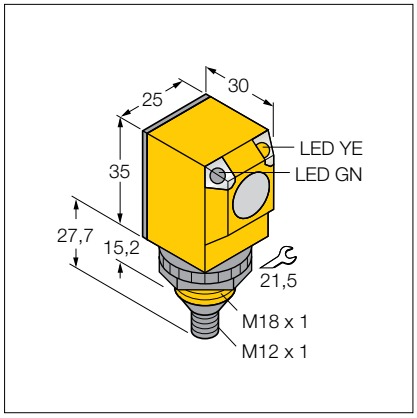

d488

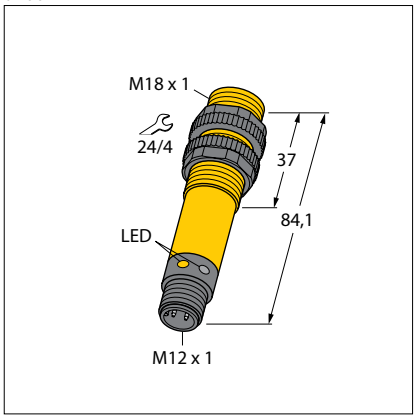

d491

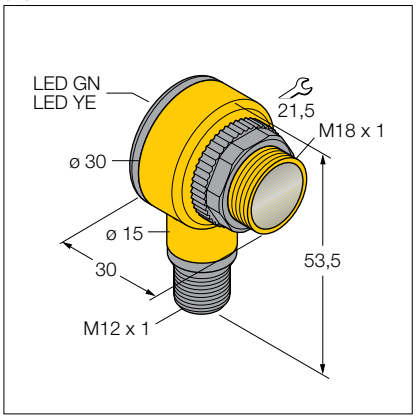

d494

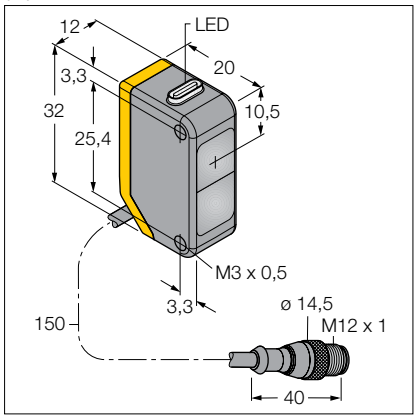

d489

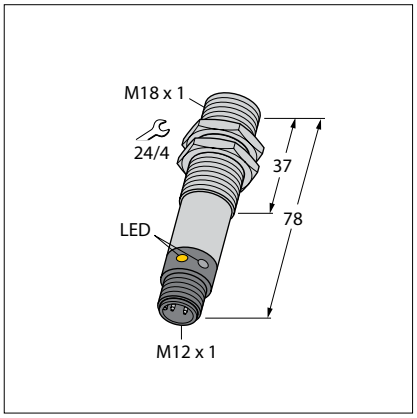

d492

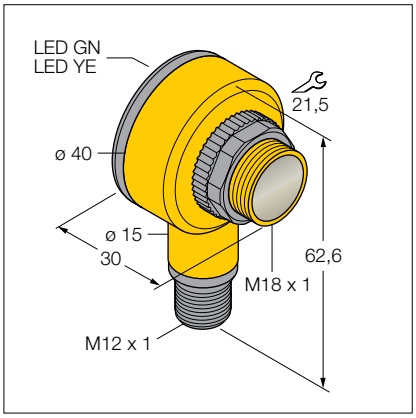

d495

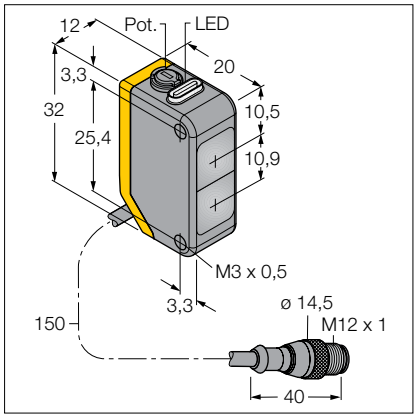

Hans Turck GmbH & Co. KG ▪ Tel. +49 208 49 52-0 ▪ Fax +49 208 49 52-264

gs in drawings

d496

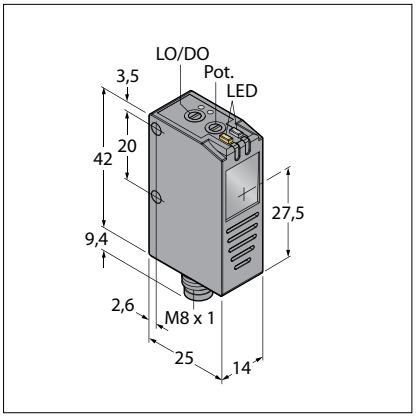

d499

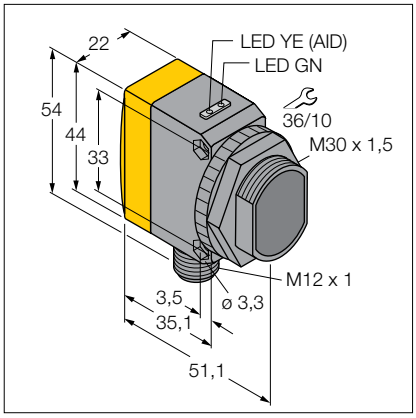

d502

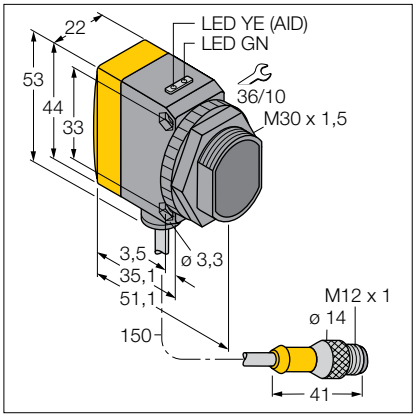

d497

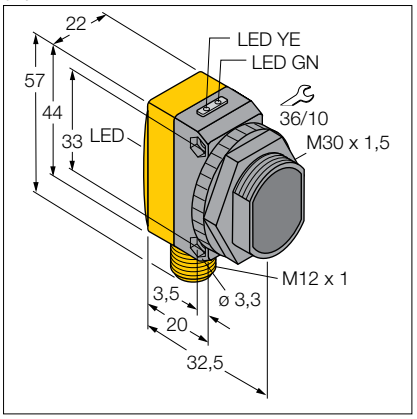

d500

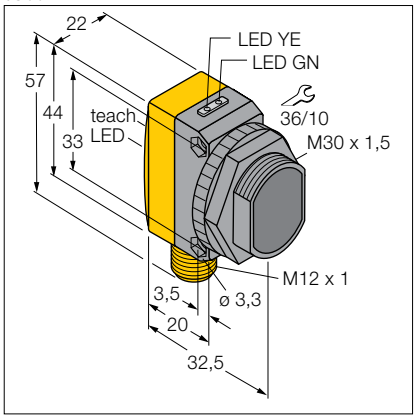

d503

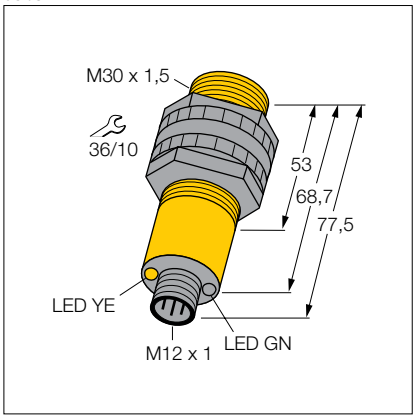

d498

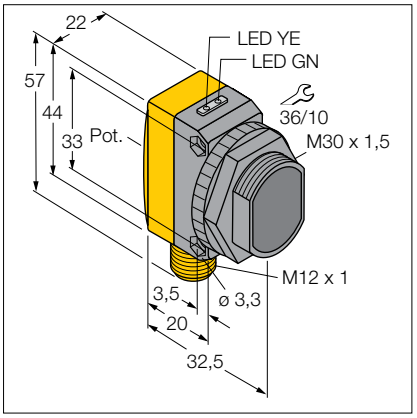

d501

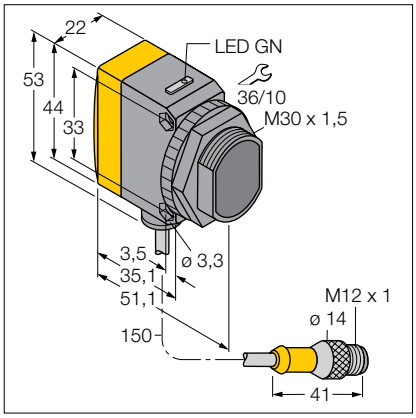

d504

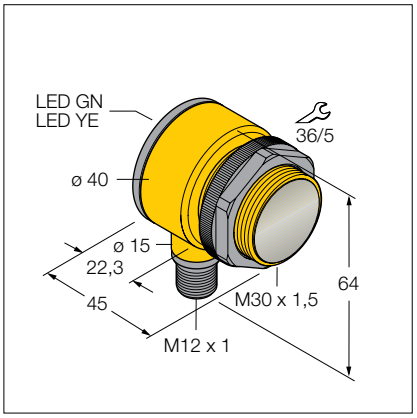

Dimension drawings

d505

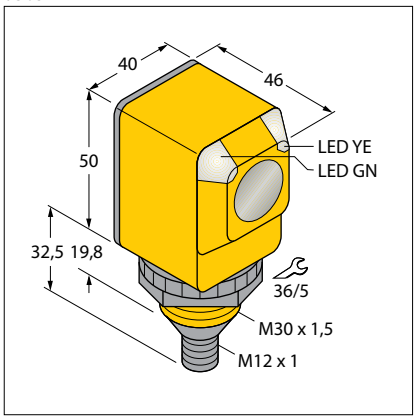

d508

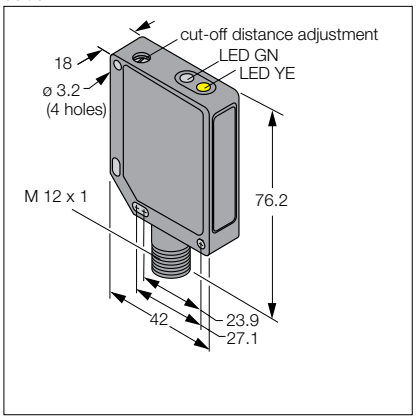

d511

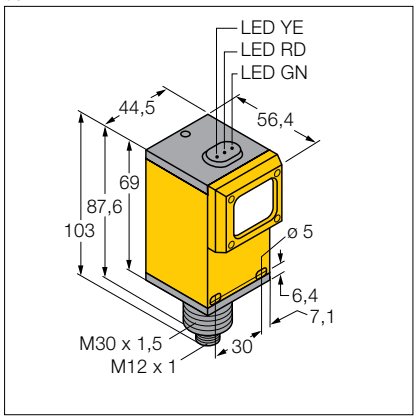

d506

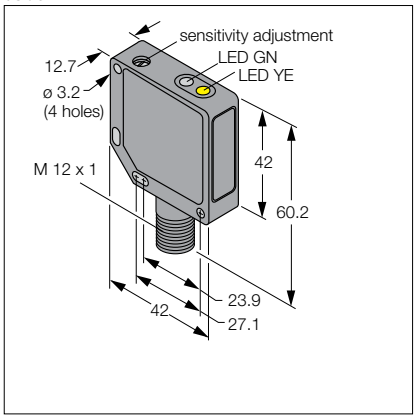

d509

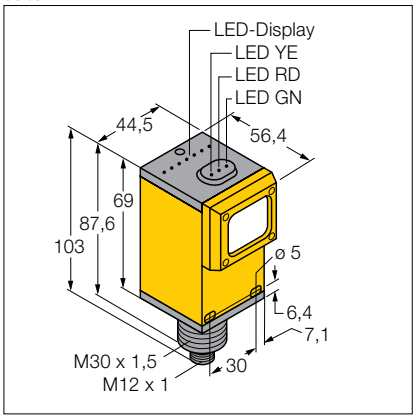

d512

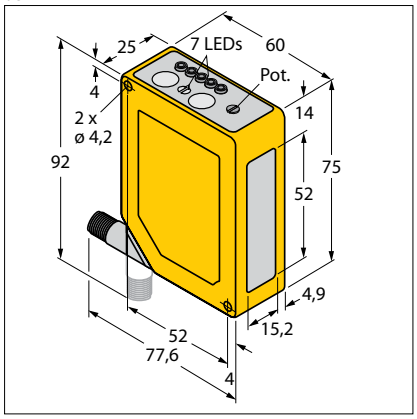

d507

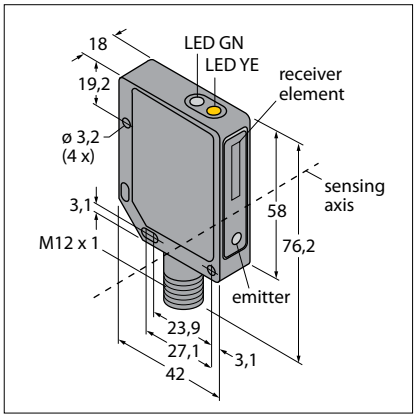

d510

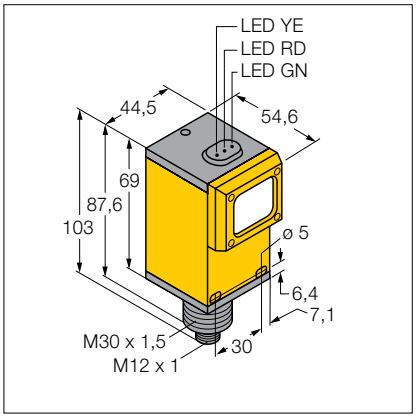

d513

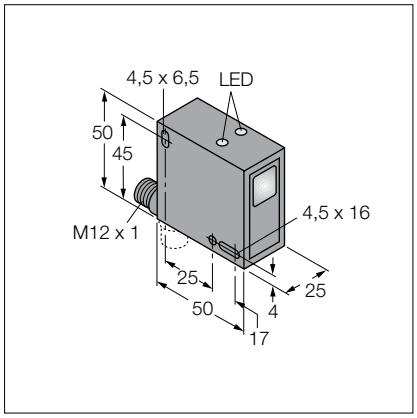

gs in drawings

d514

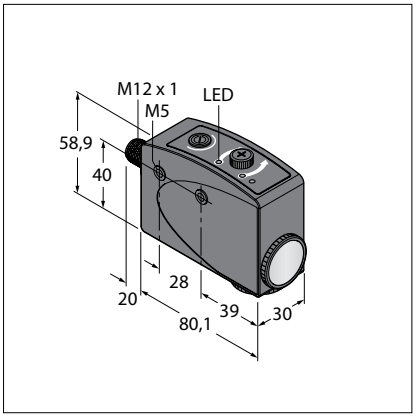

d517

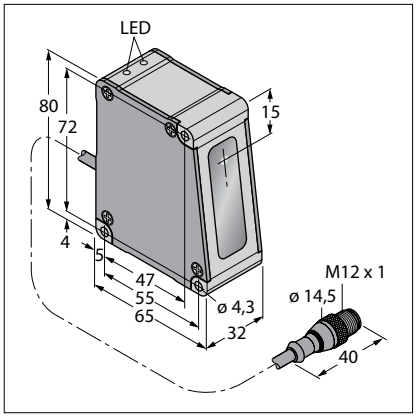

d520

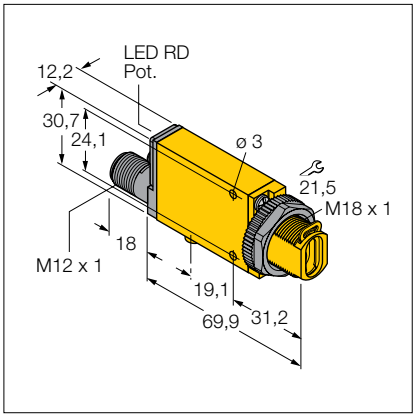

d515

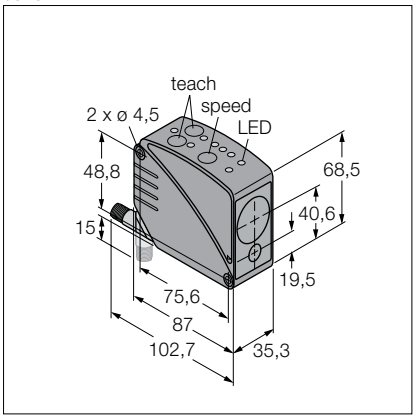

d518

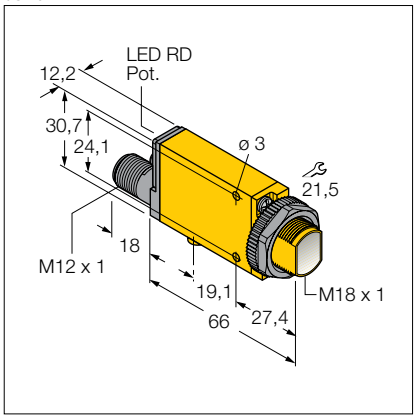

d521

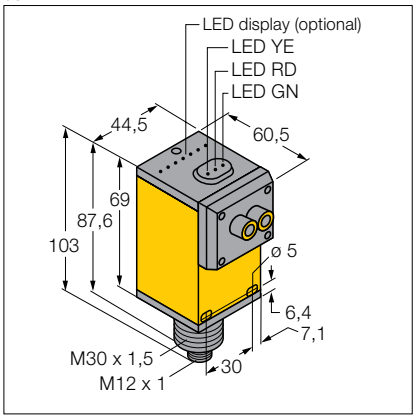

d516

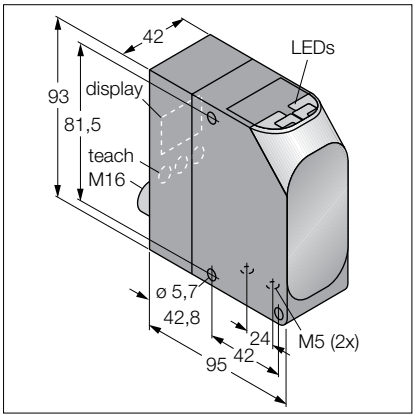

d519

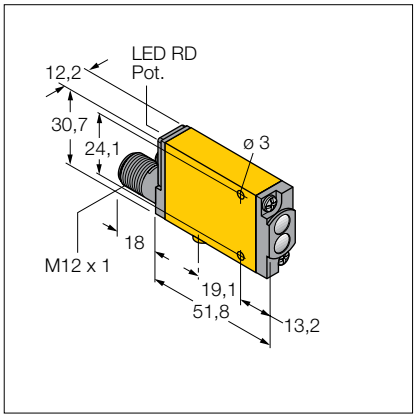

d522

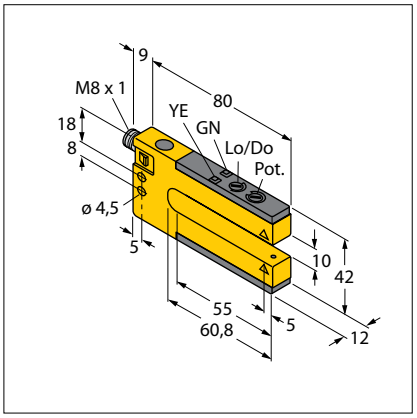

Dimension drawings

d523

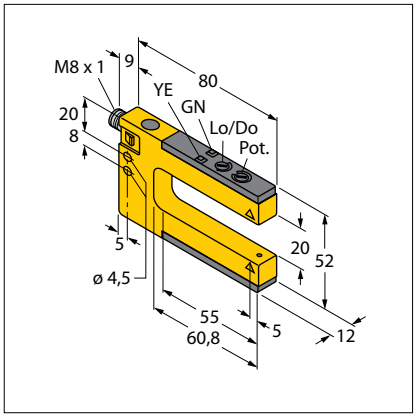

d526

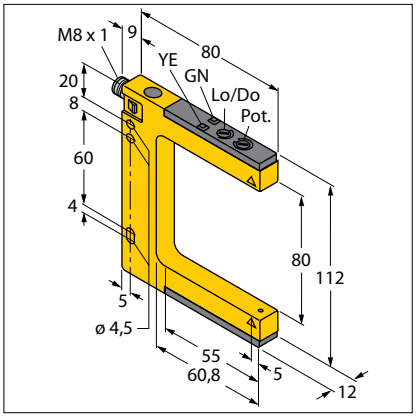

d529

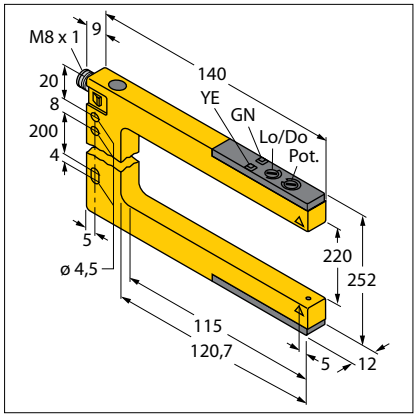

d524

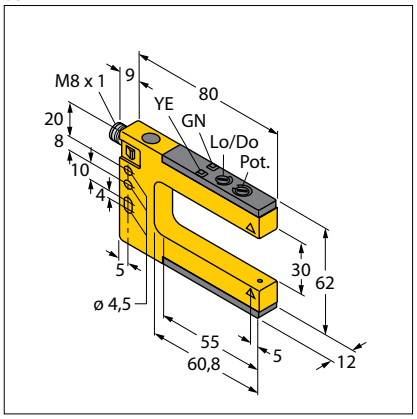

d527

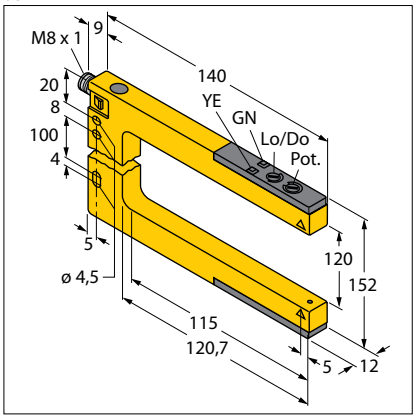

d530

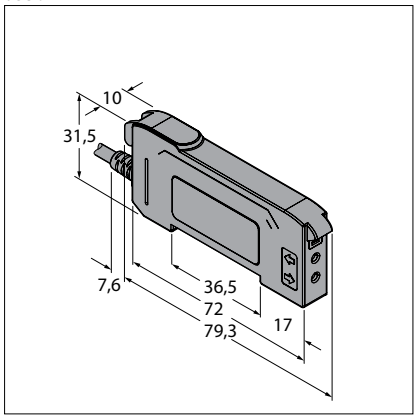

d525

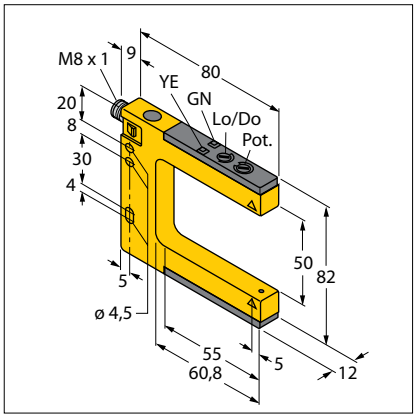

d528

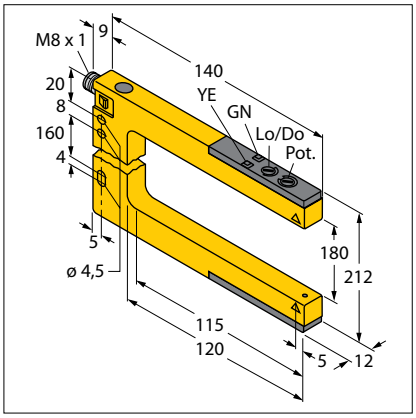

d531

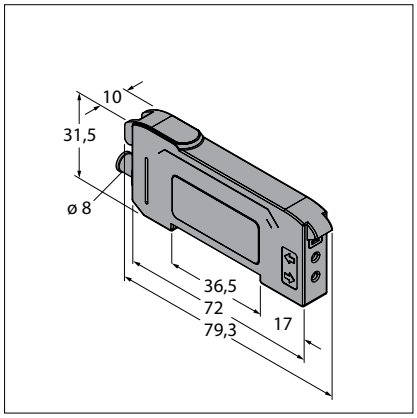

gs in drawings

d532

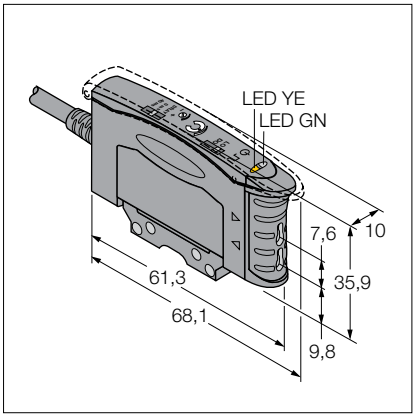

d535

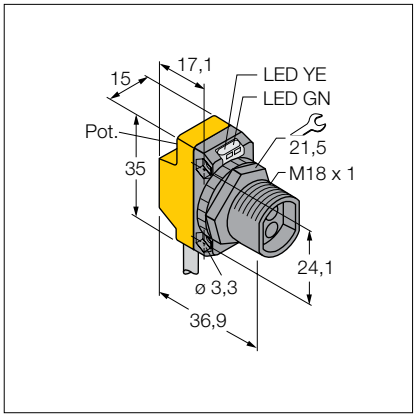

d538

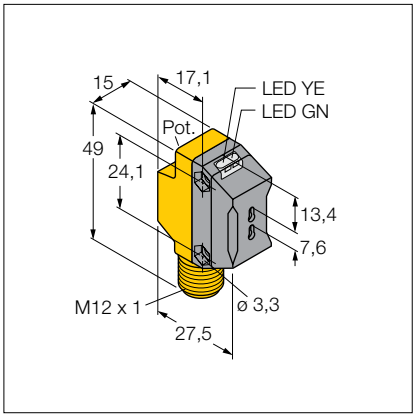

d533

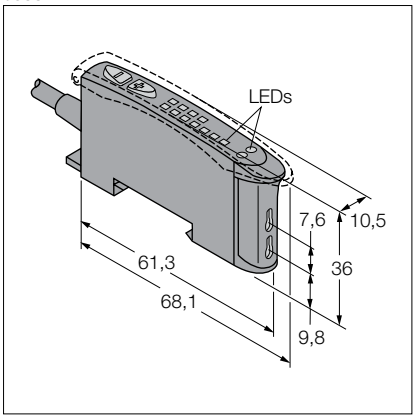

d536

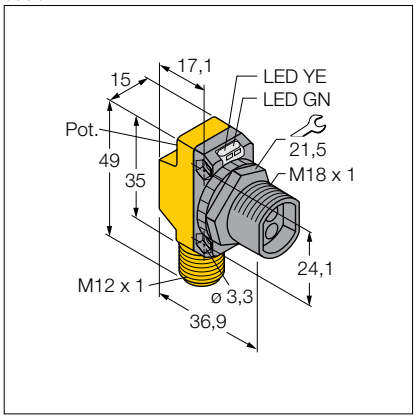

d539

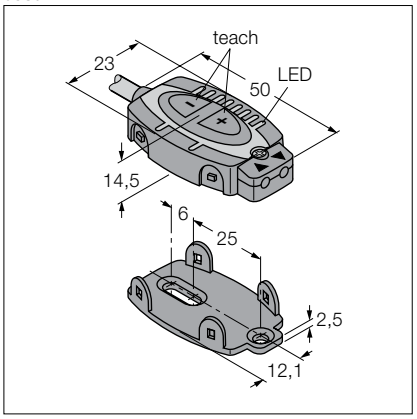

d534

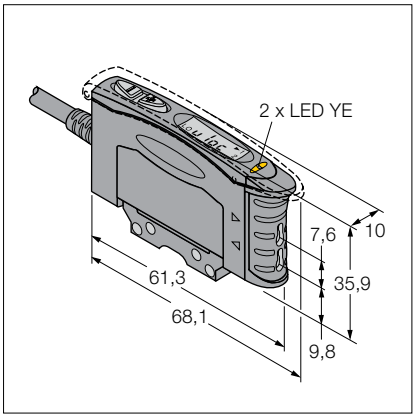

d537

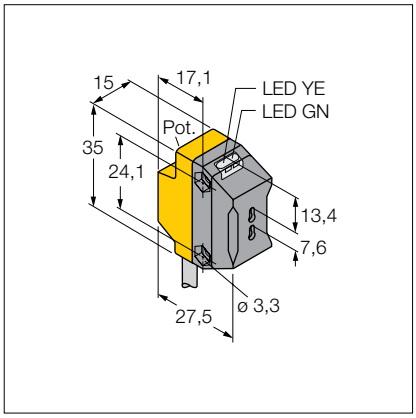

d540

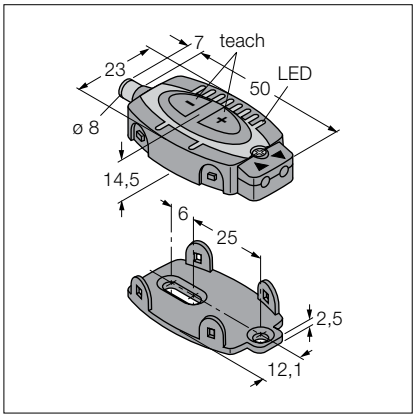

Dimension drawings

d541

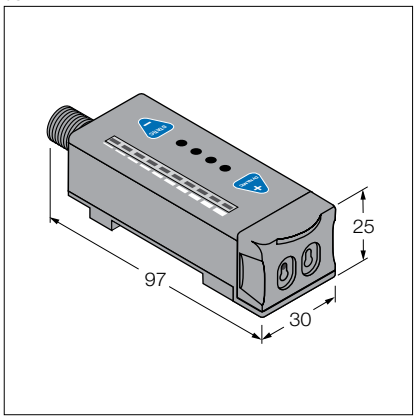

d544

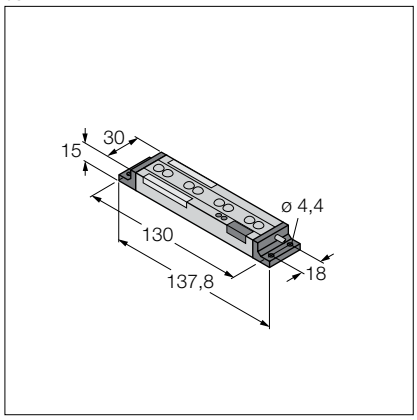

d547

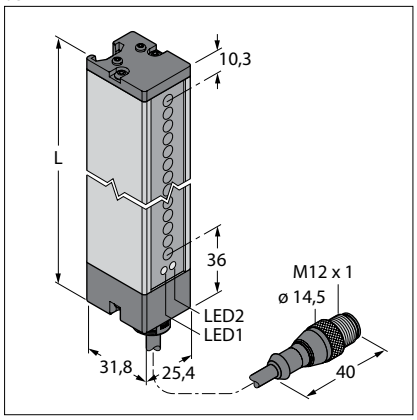

d542

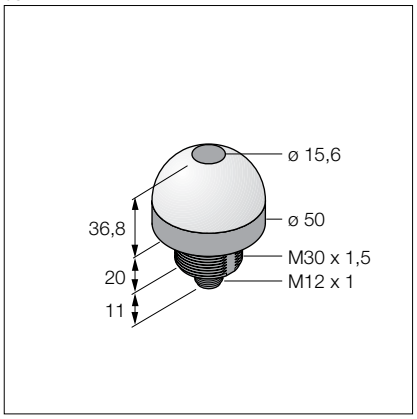

d545

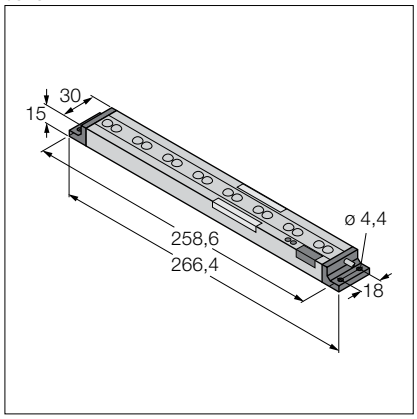

d548

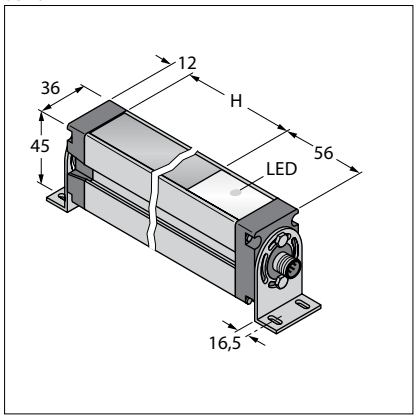

d543

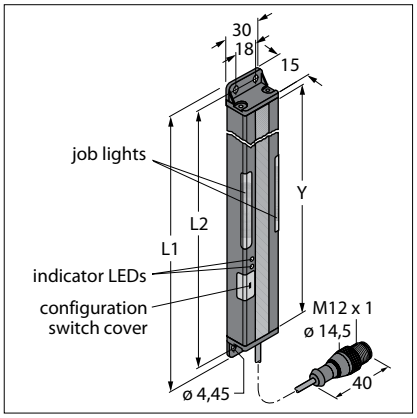

d546

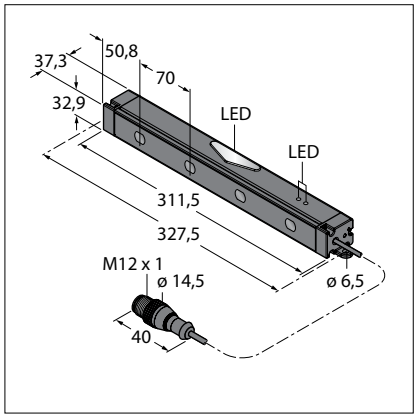

d549

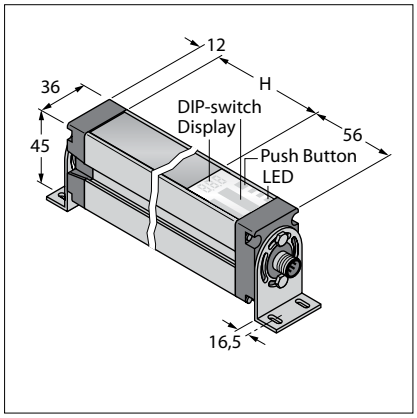

gs in drawings

d550

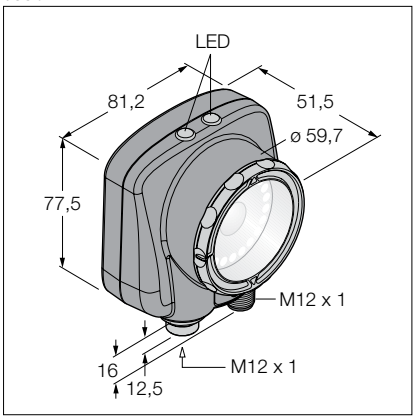

d553

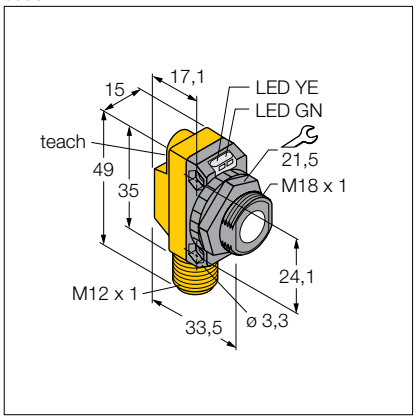

d556

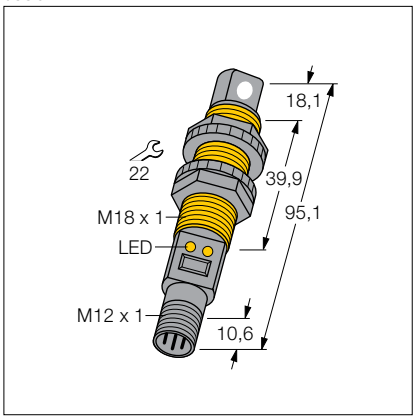

d551

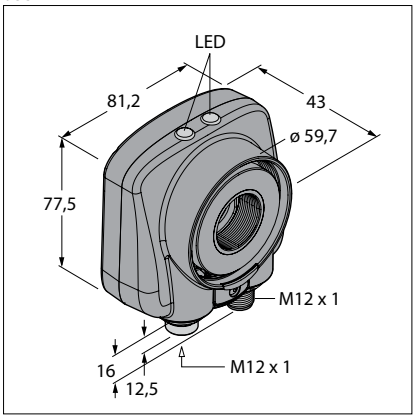

d554

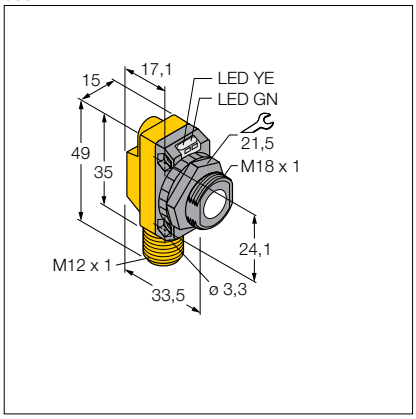

d557

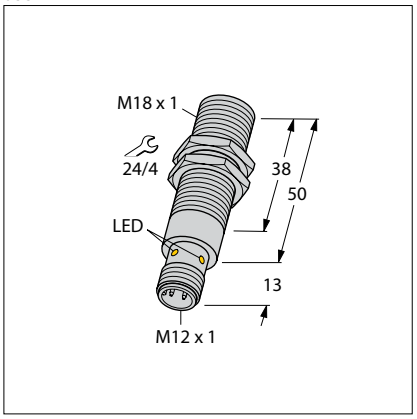

d552

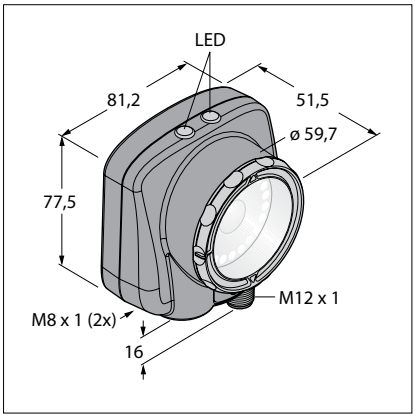

d555

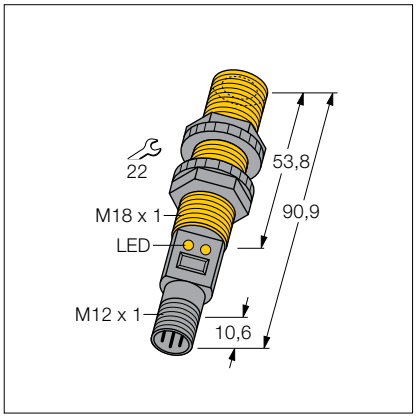

d558

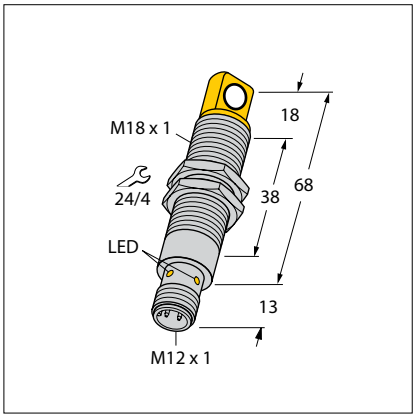

Dimension drawings

d559

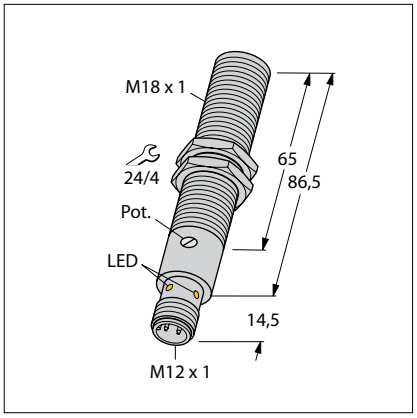

d562

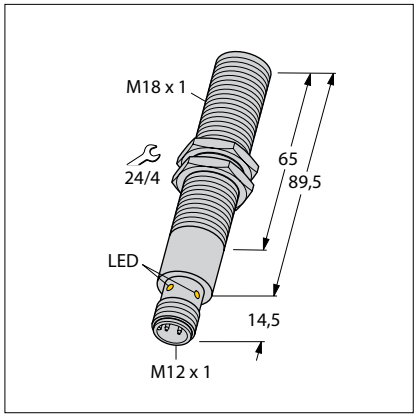

d565

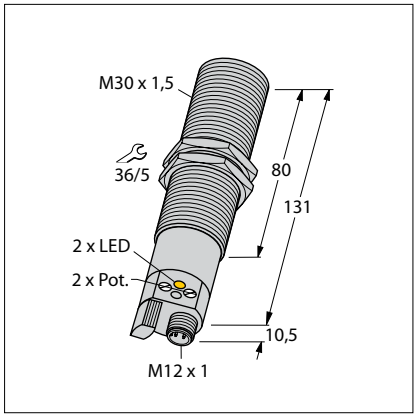

d560

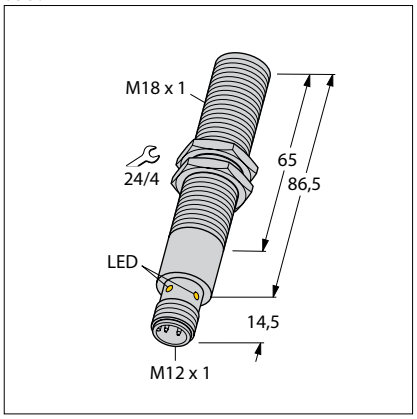

d563

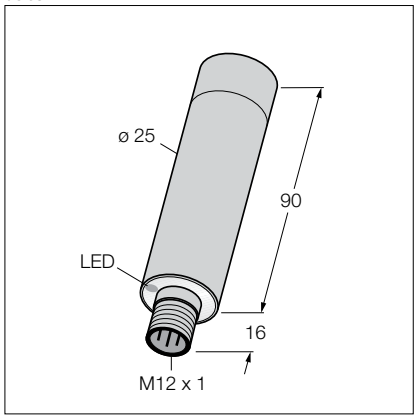

d566

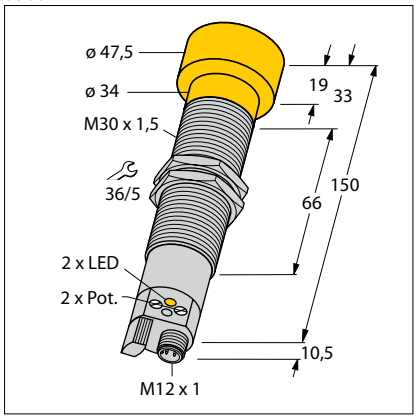

d561

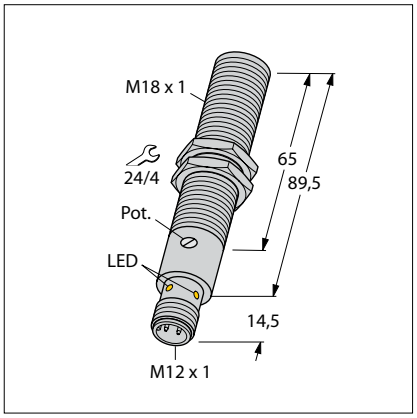

d564

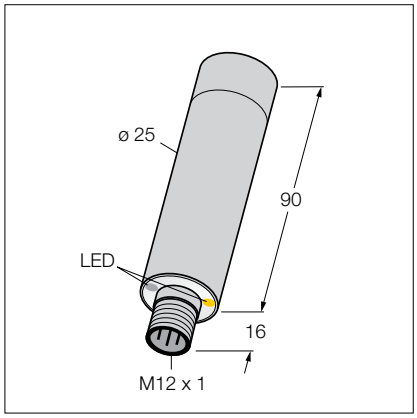

d567

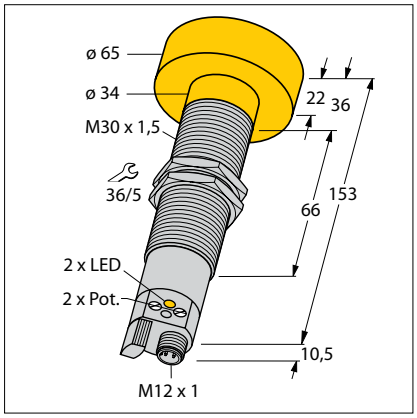

Hans Turck GmbH & Co. KG ▪ Tel. +49 208 49 52-0 ▪ Fax +49 208 49 52-264

gs in drawings

d568

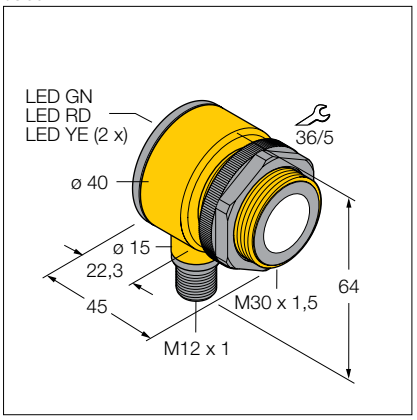

d571

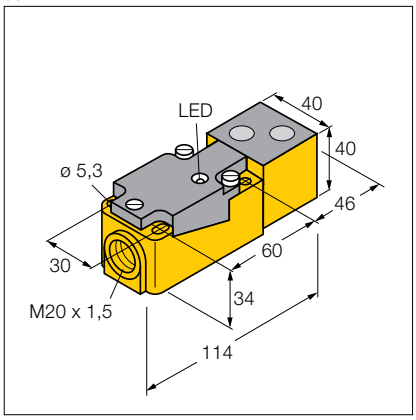

d574

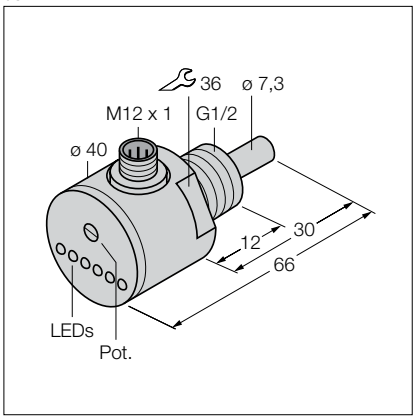

d569

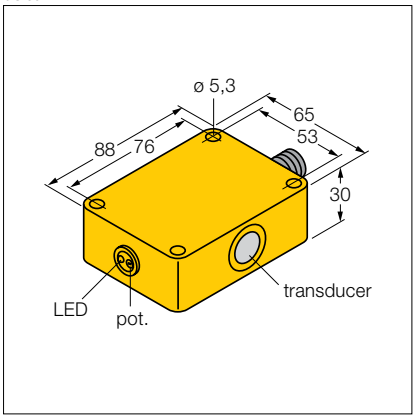

d572

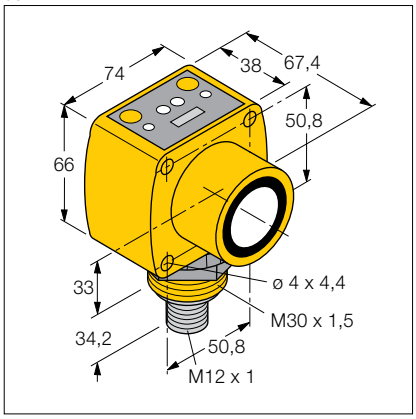

d575

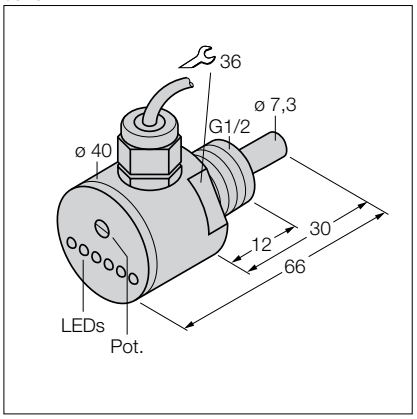

d570

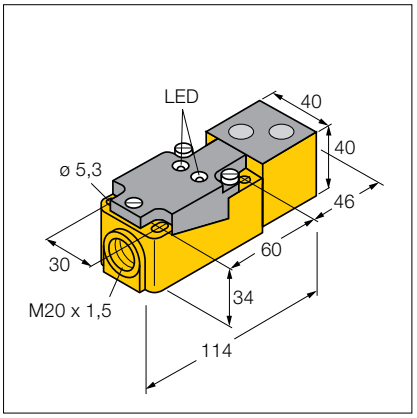

d573

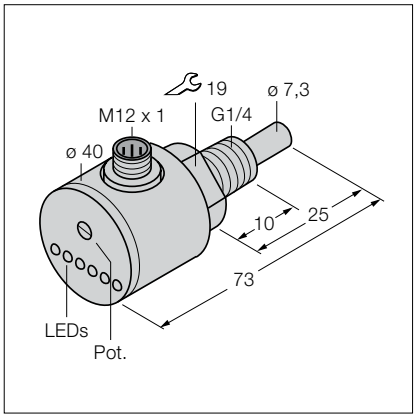

d576

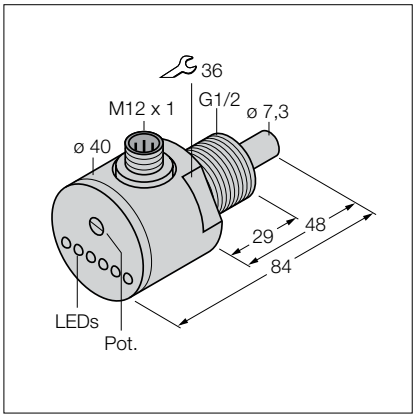

Dimension drawings

d577

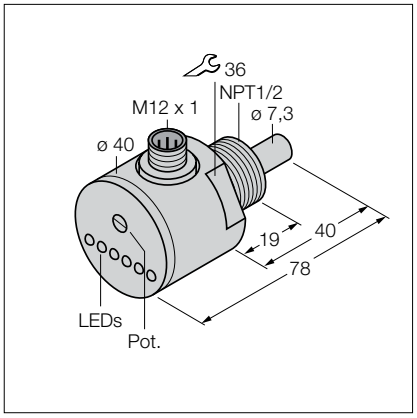

d580

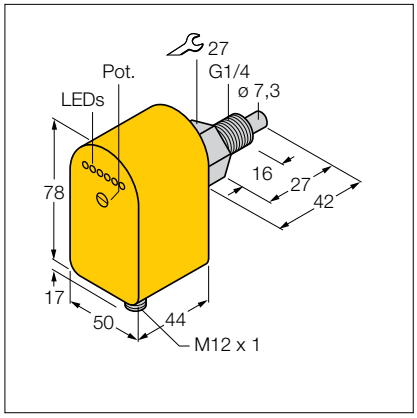

d583

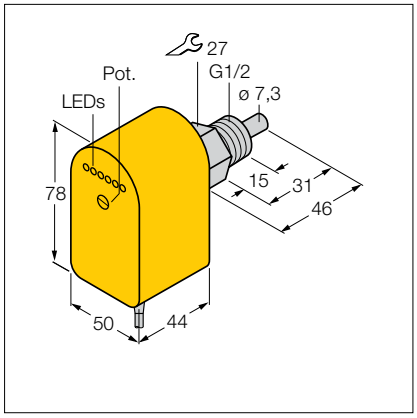

d578

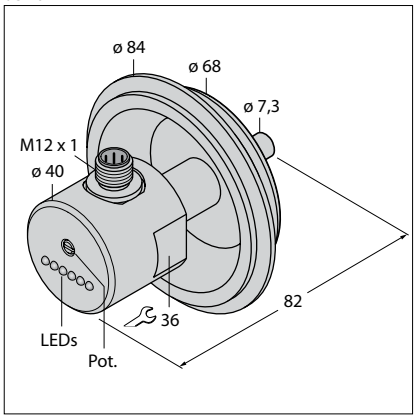

d581

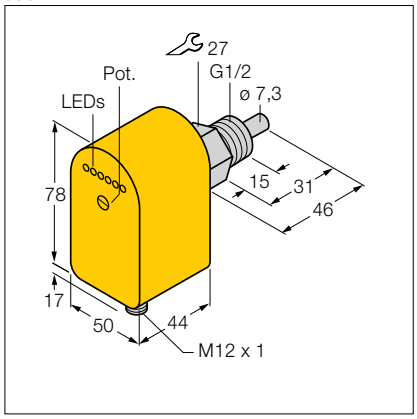

d584

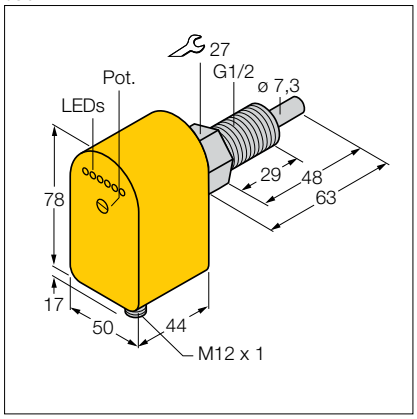

d579

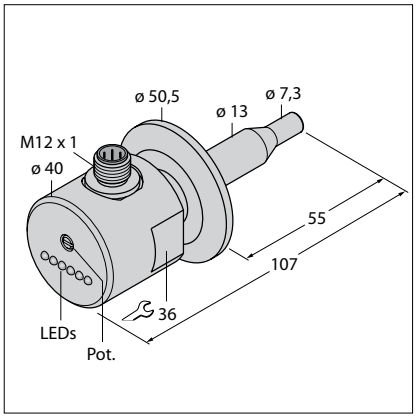

d582

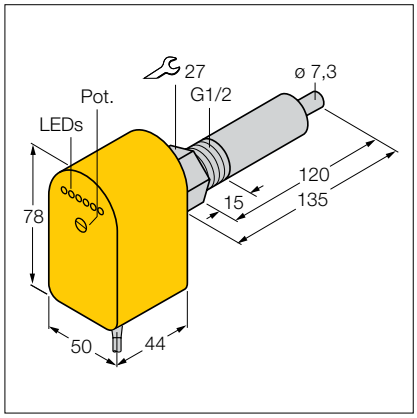

d585

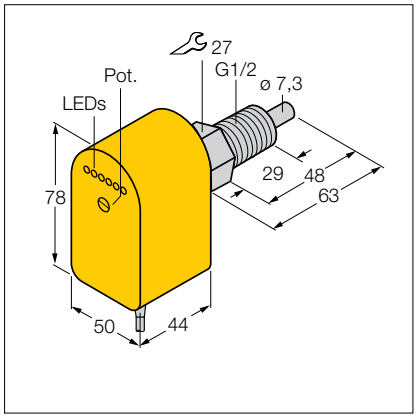

Hans Turck GmbH & Co. KG ▪ Tel. +49 208 49 52-0 ▪ Fax +49 208 49 52-264

gs in drawings

d586

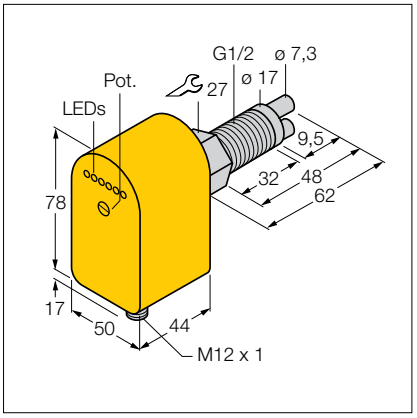

d589

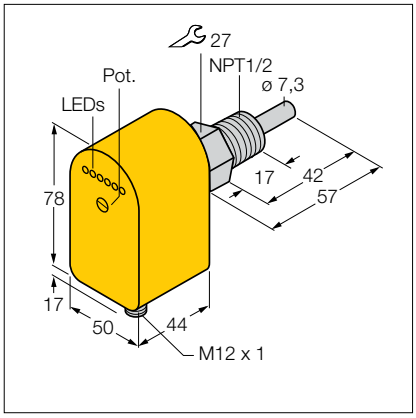

d592

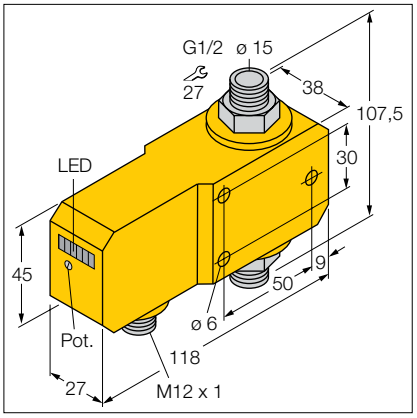

d587

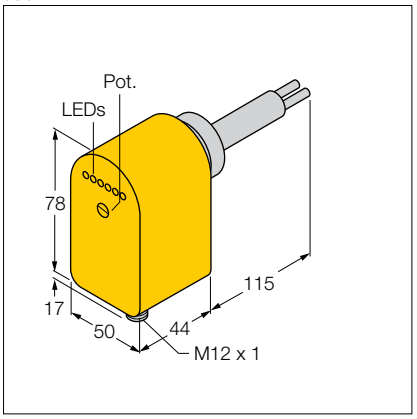

d590

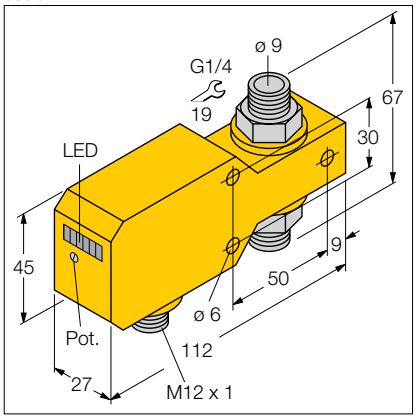

d593

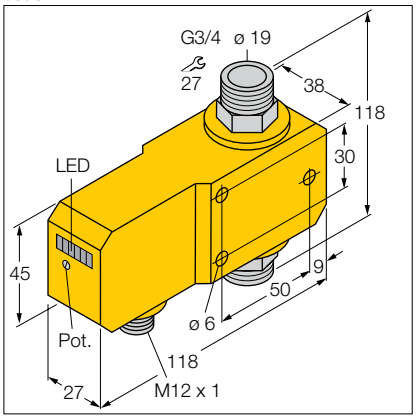

d588

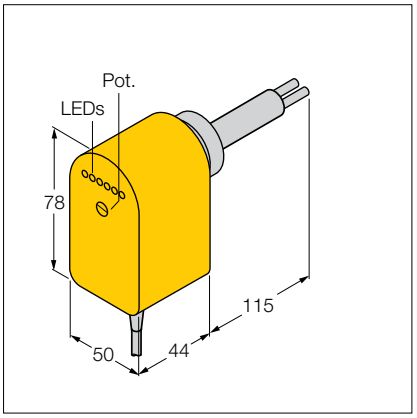

d591

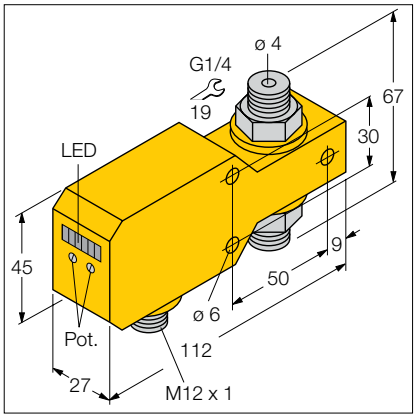

d594

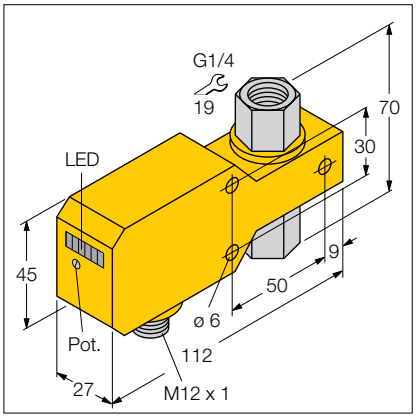

Dimension drawings

d595

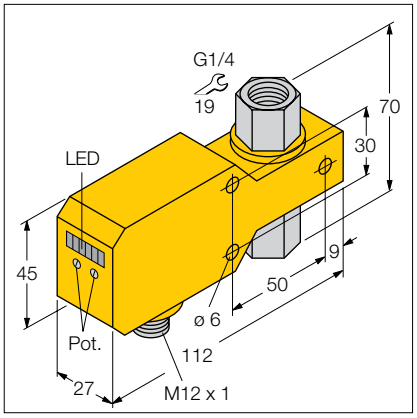

d598

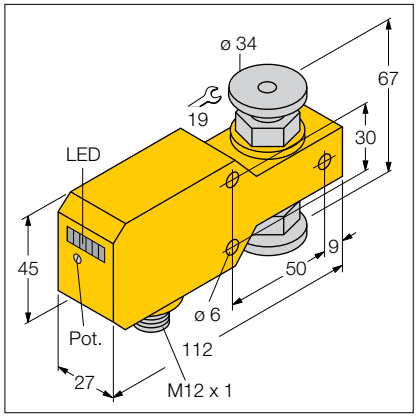

d601

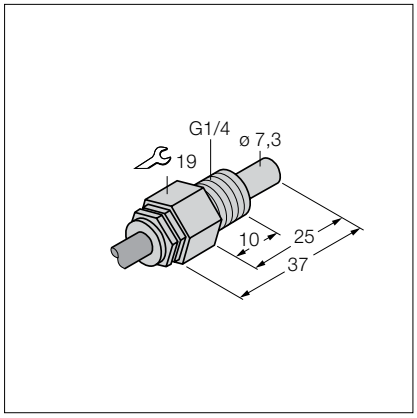

d596

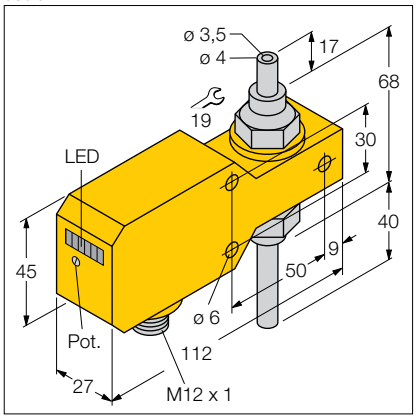

d599

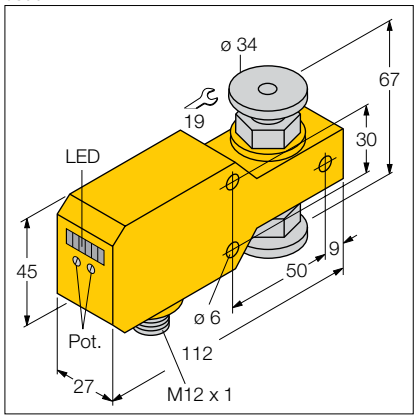

d602

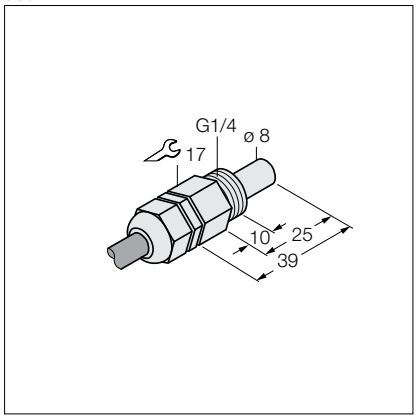

d597

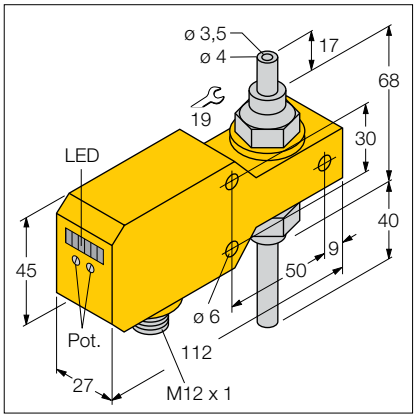

d600

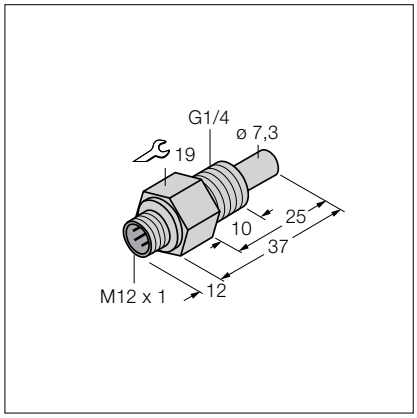

d603

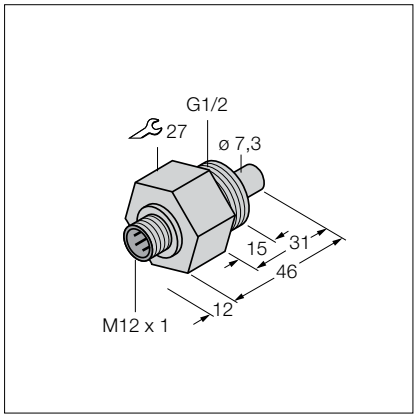

Hans Turck GmbH & Co. KG ▪ Tel. +49 208 49 52-0 ▪ Fax +49 208 49 52-264

gs in drawings

d604

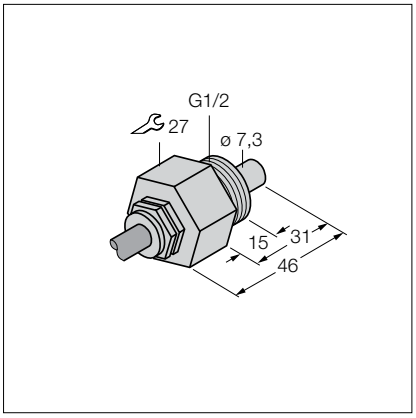

d607

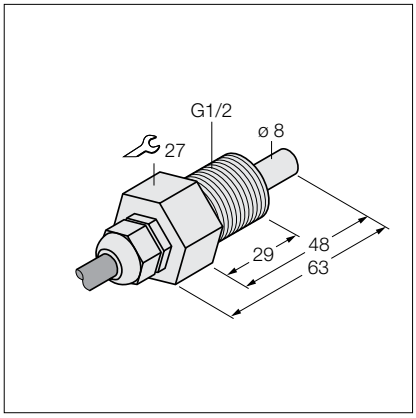

d610

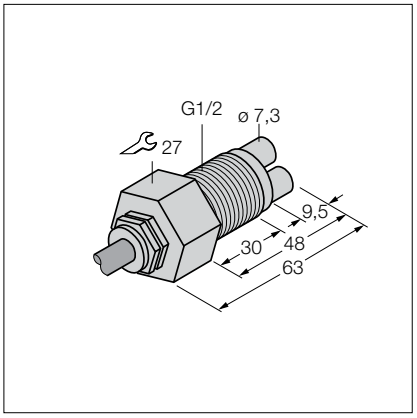

d605

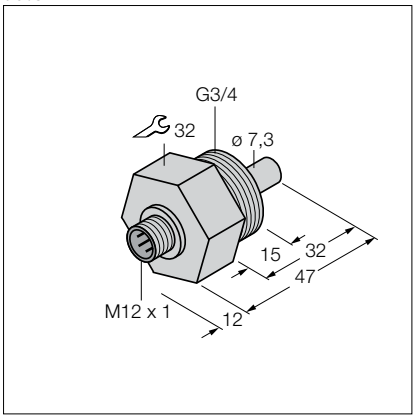

d608

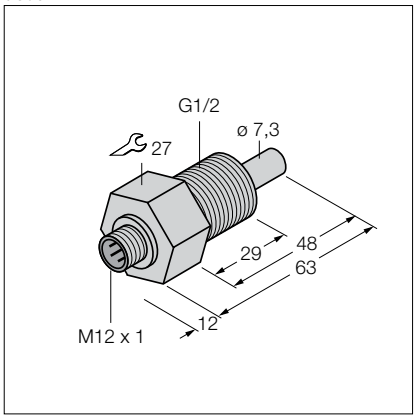

d611

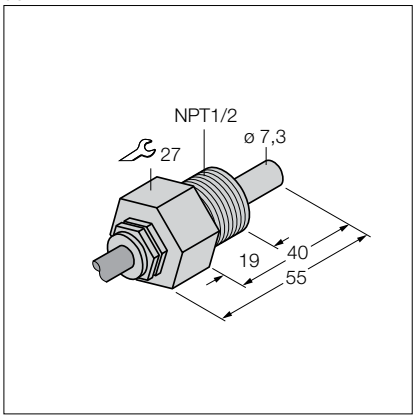

d606

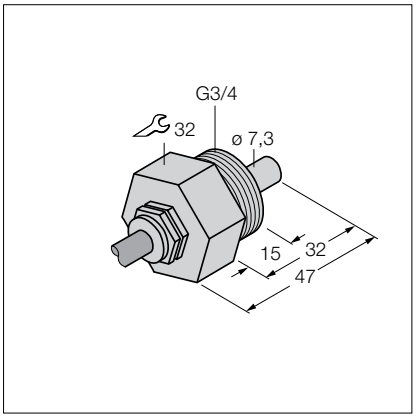

d609

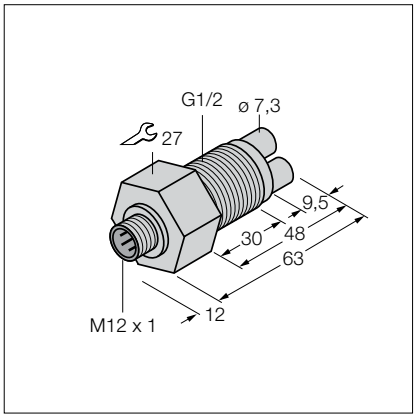

d612

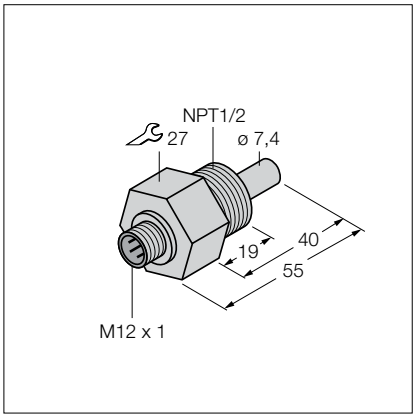

Dimension drawings

d613

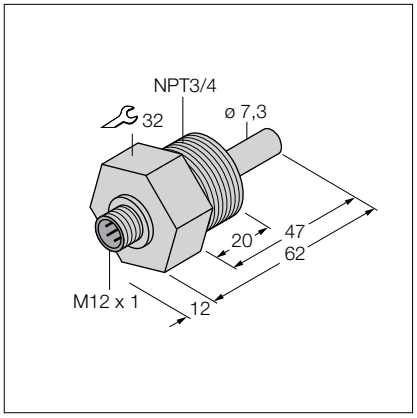

d616

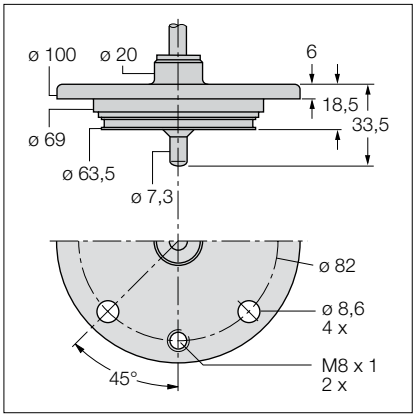

d619

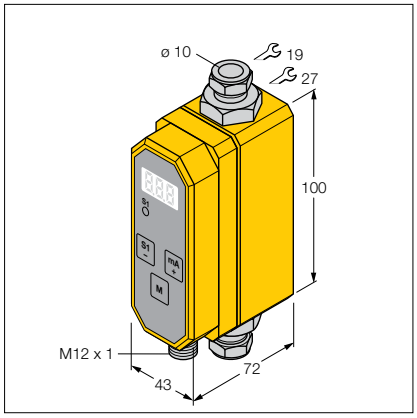

d614

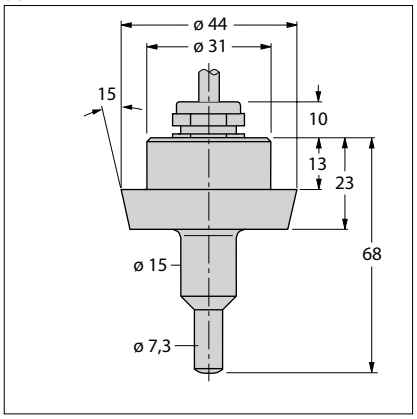

d617

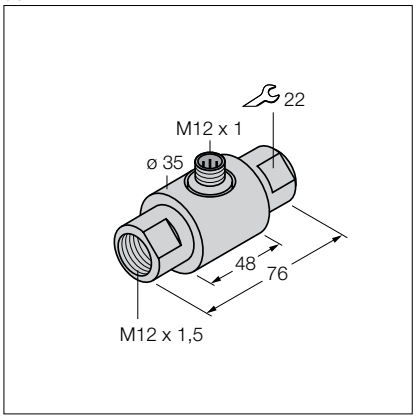

d620

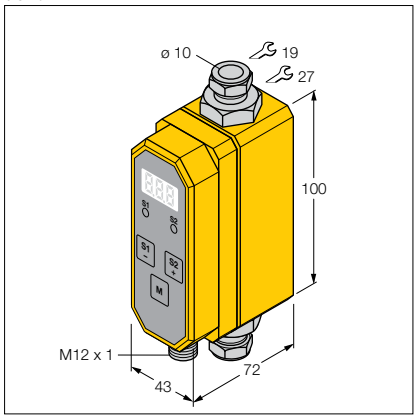

d615

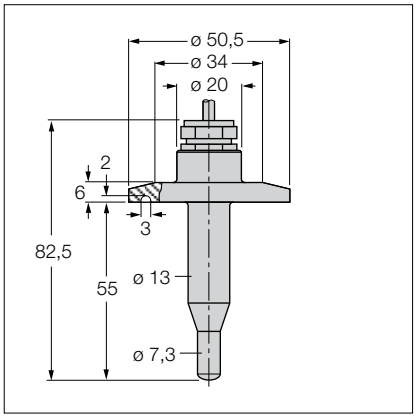

d618

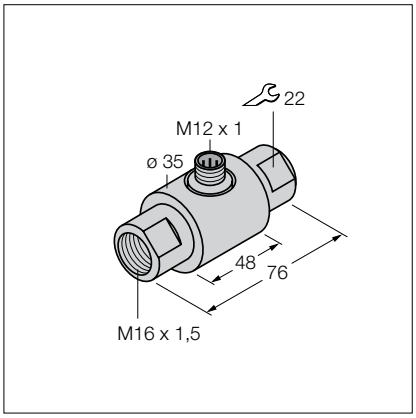

d621

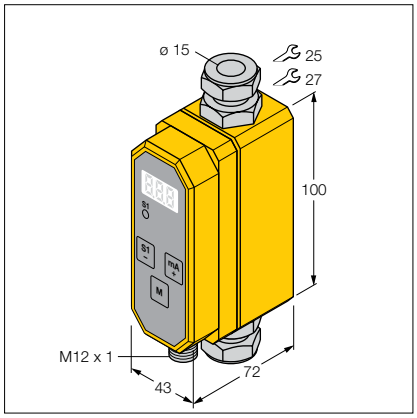

Hans Turck GmbH & Co. KG ▪ Tel. +49 208 49 52-0 ▪ Fax +49 208 49 52-264

gs in drawings

d622

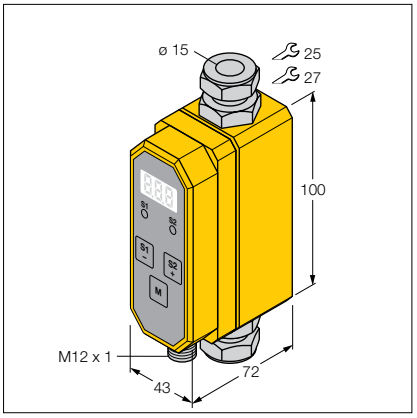

d625

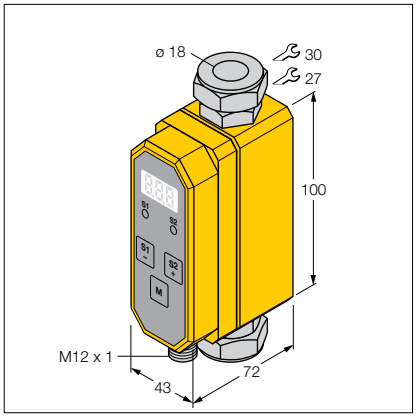

d628

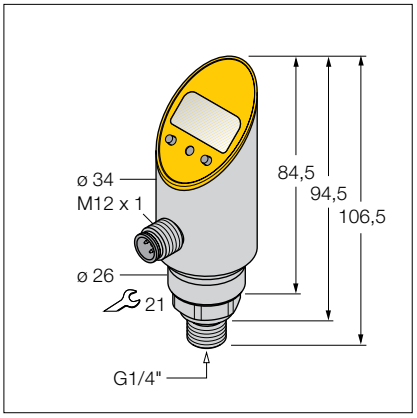

d623

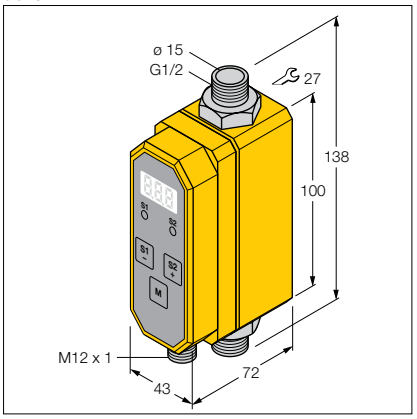

d626

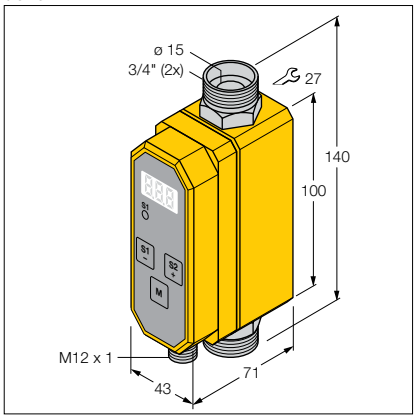

d629

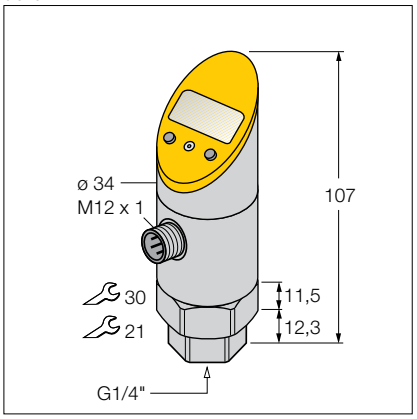

d624

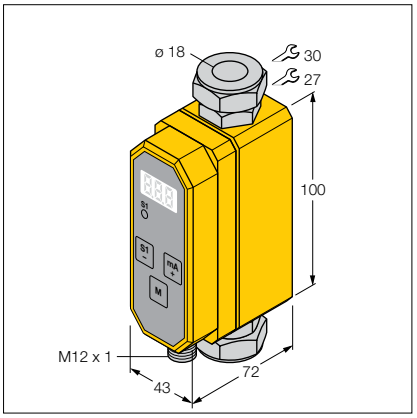

d627

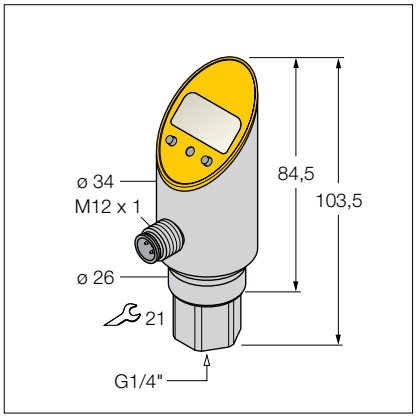

d630

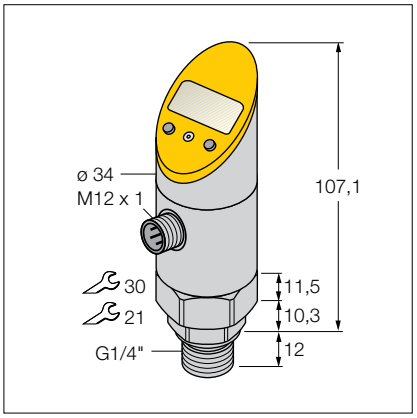

Dimension drawings

d631

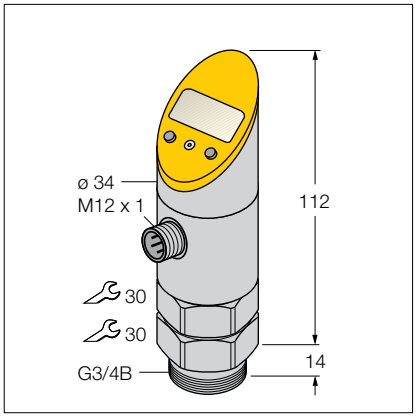

d634

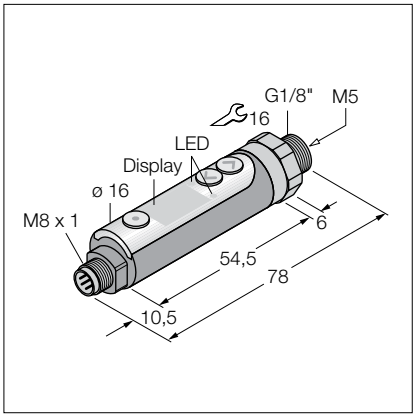

d637

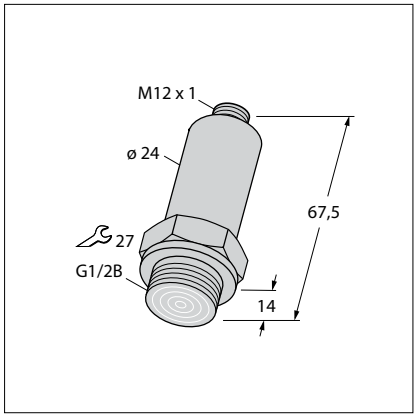

d632

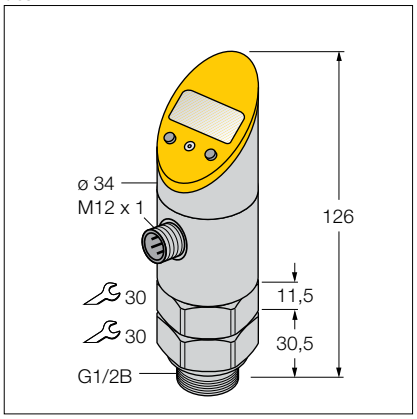

d635

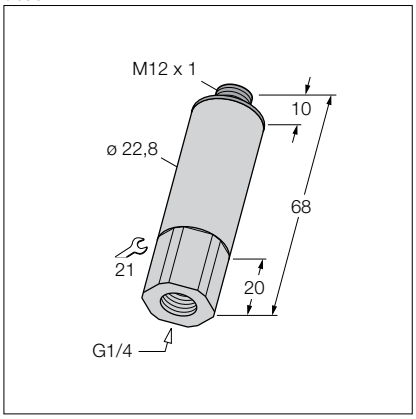

d638

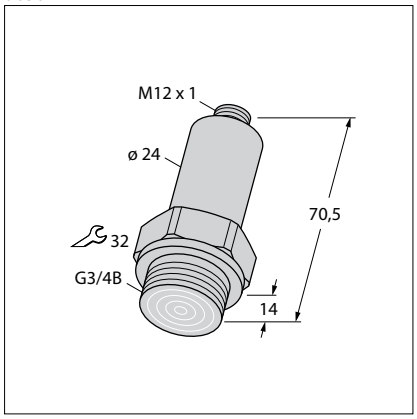

d633

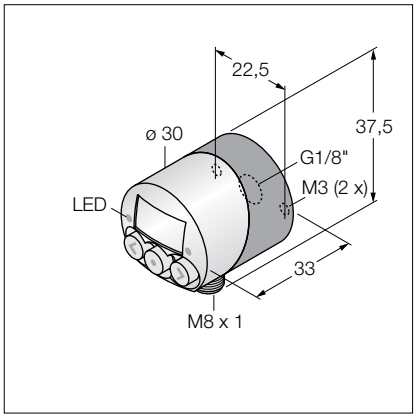

d636

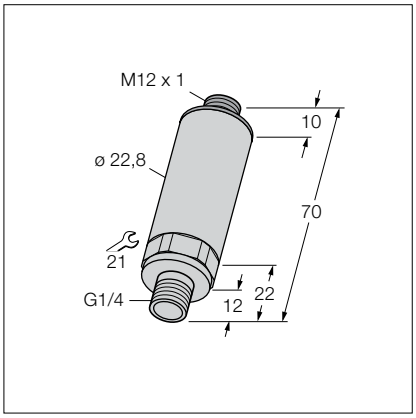

d639

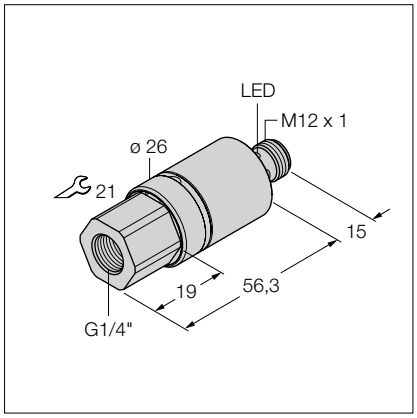

gs in drawings

d640

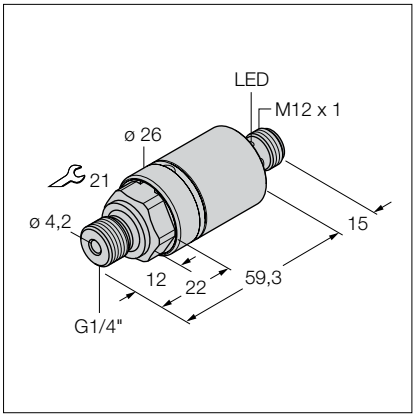

d643

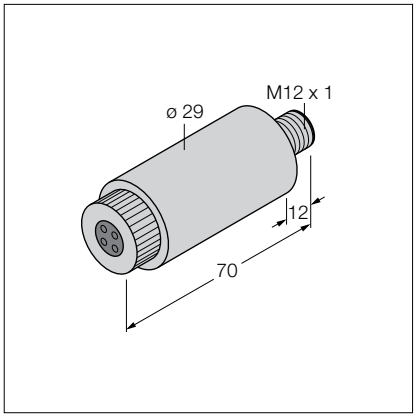

d646

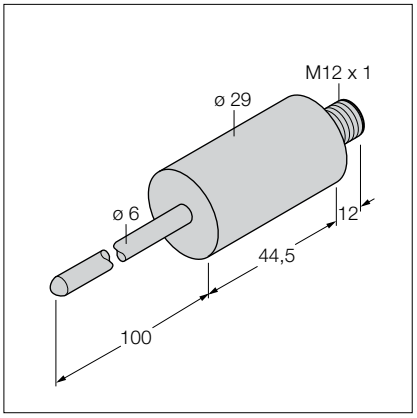

d641

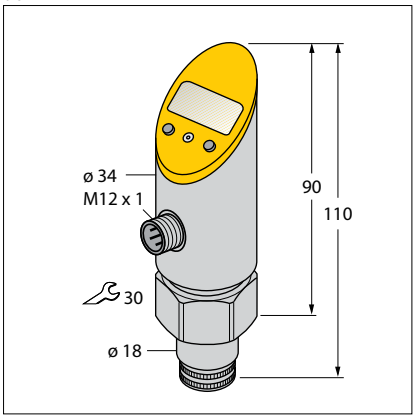

d644

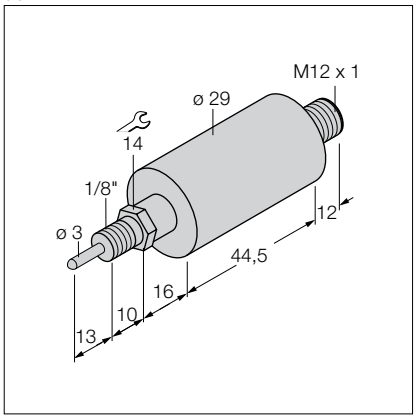

d647

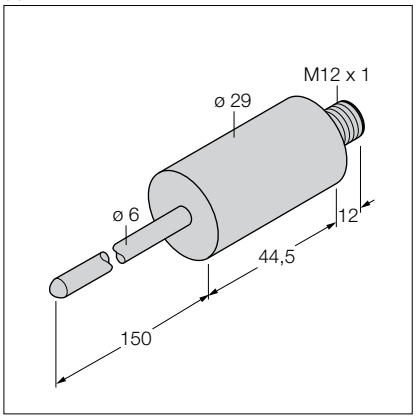

d642

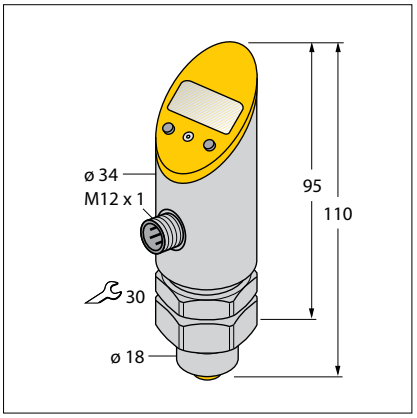

d645

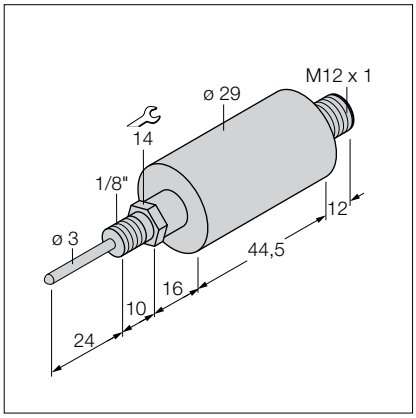

d648

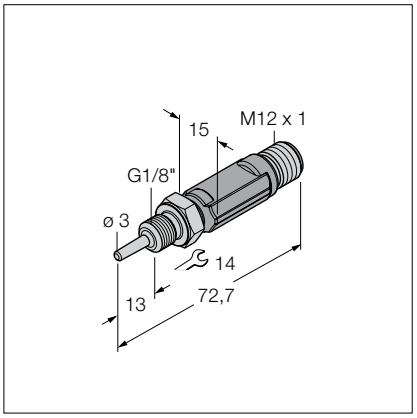

Dimension drawings

d649

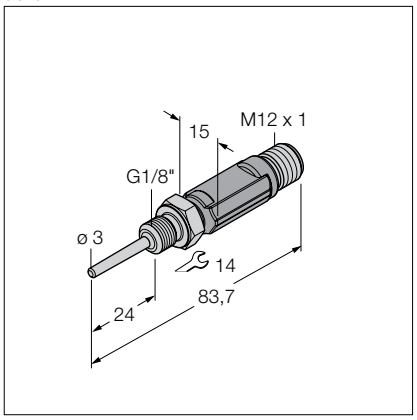

d652

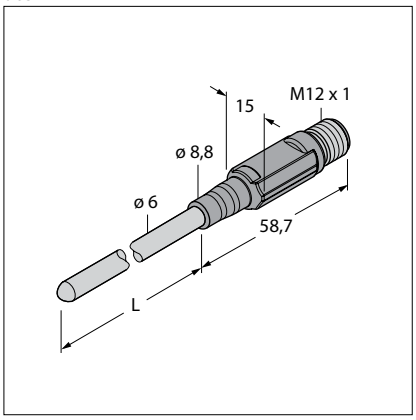

d655

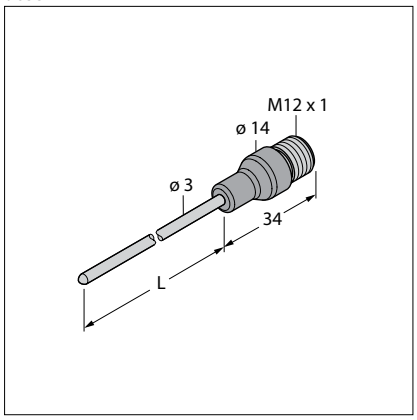

d650

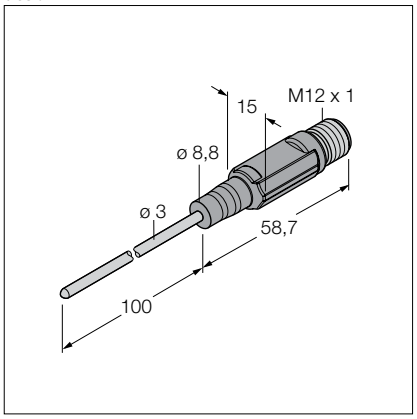

d653

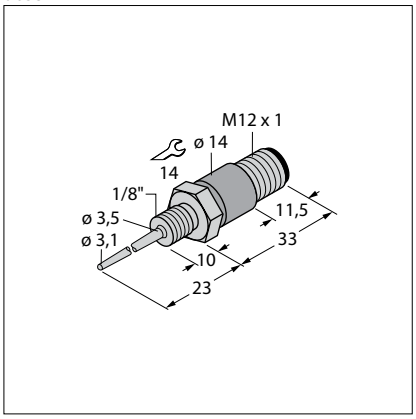

d656

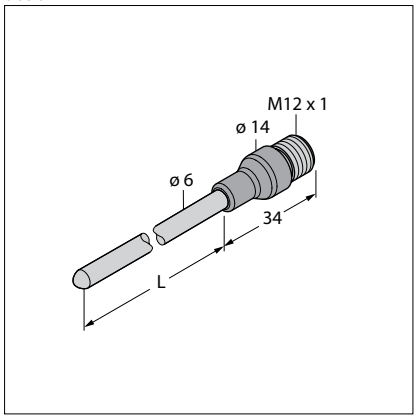

d651

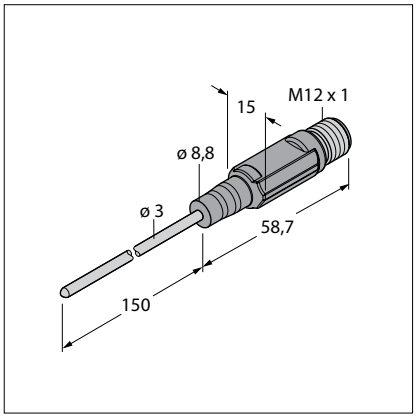

d654

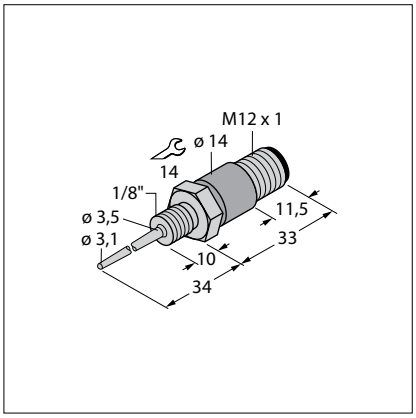

d657

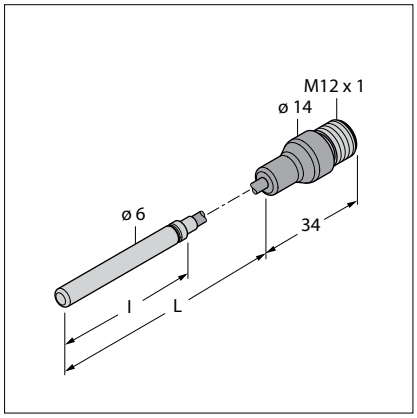

Hans Turck GmbH & Co. KG ▪ Tel. +49 208 49 52-0 ▪ Fax +49 208 49 52-264

gs in drawings

d658

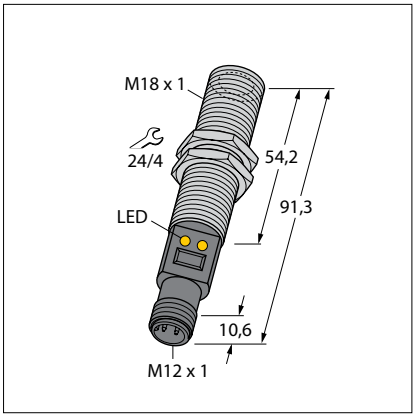

d661

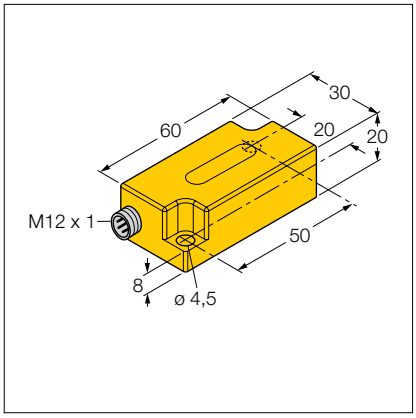

d664

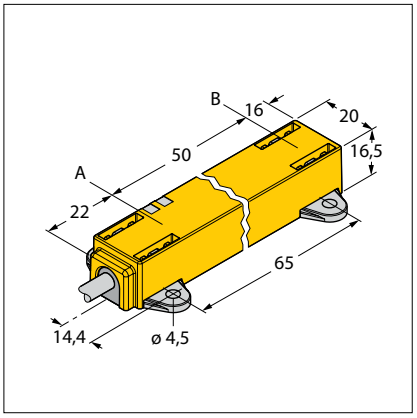

d659

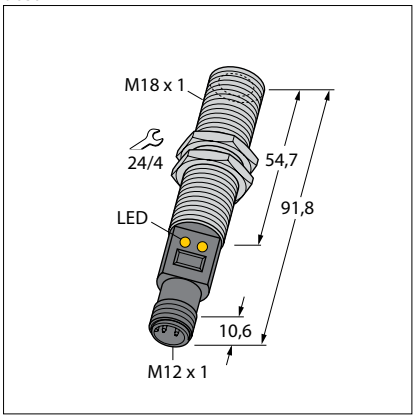

d662

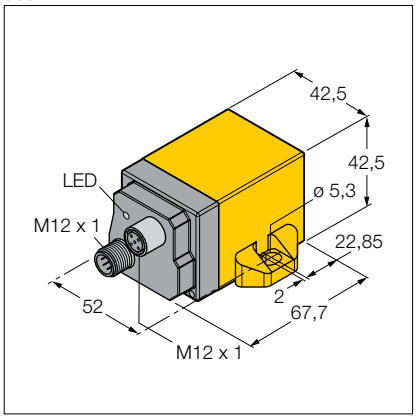

d665

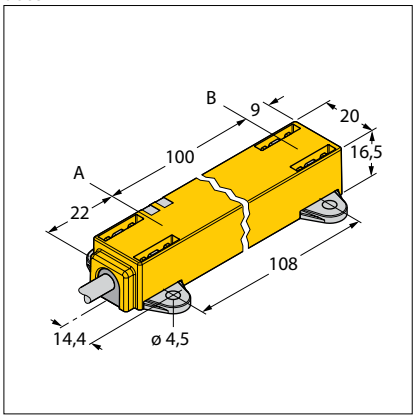

d660

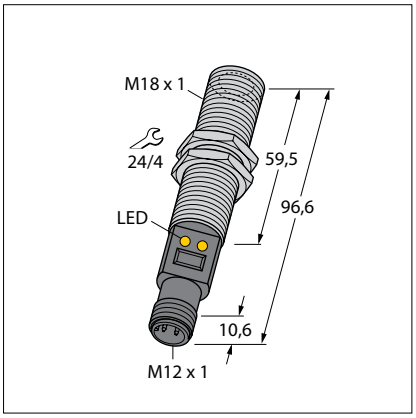

d663

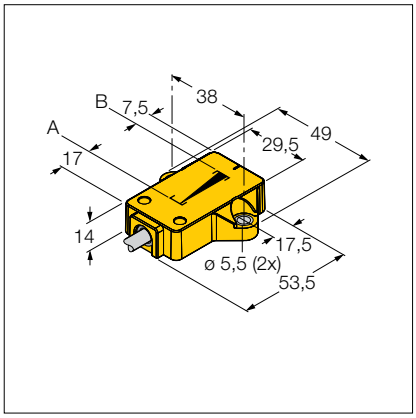

d666

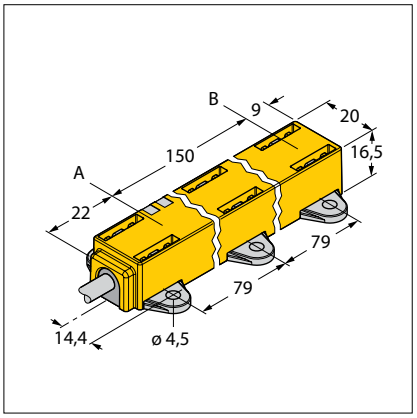

Dimension drawings

d667

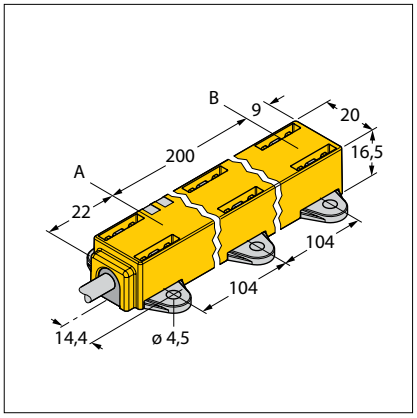

d670

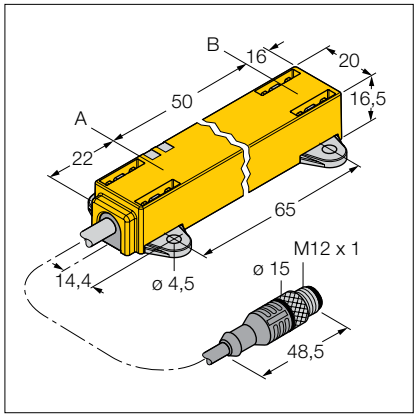

d673

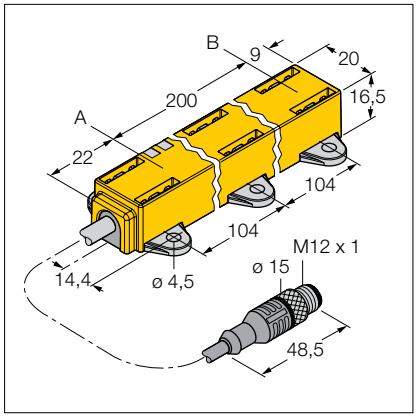

d668

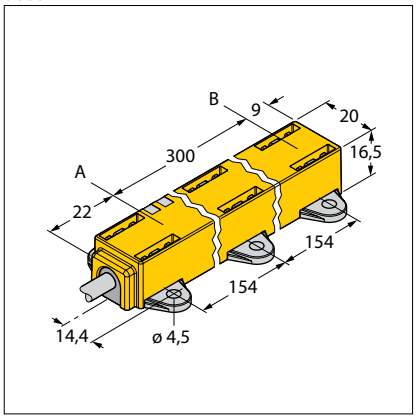

d671

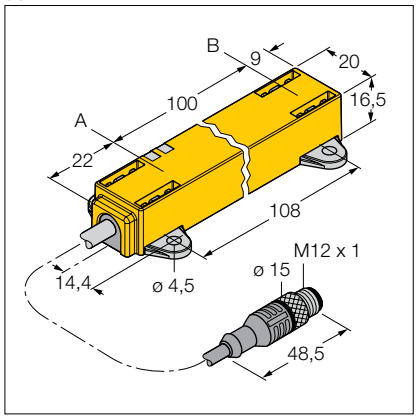

d674

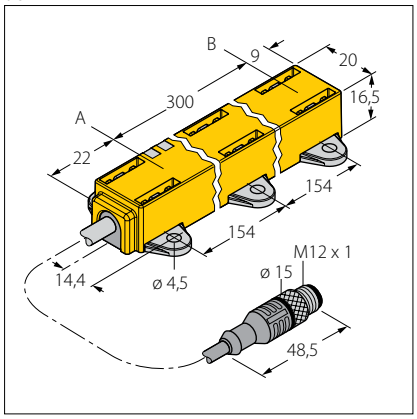

d669

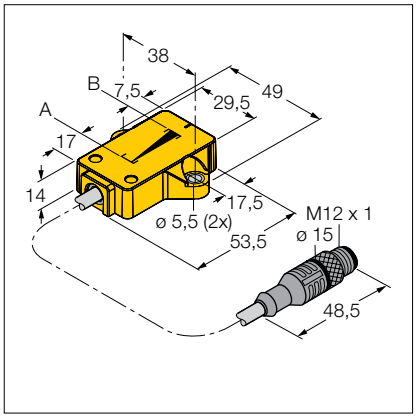

d672

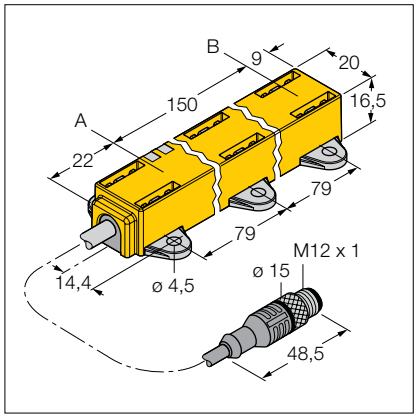

d675

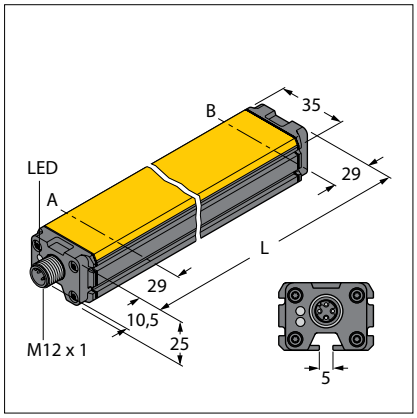

gs in drawings

d676

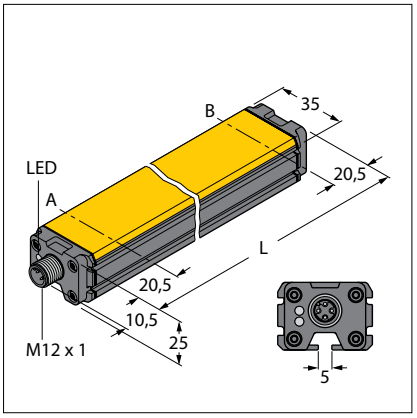

d679

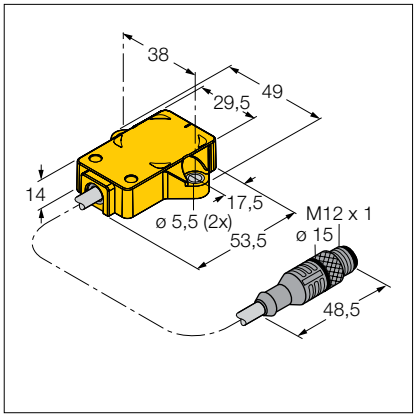

d682

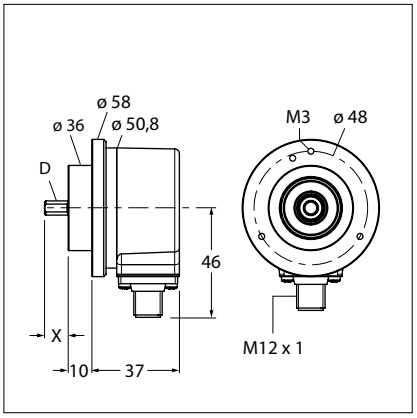

d677

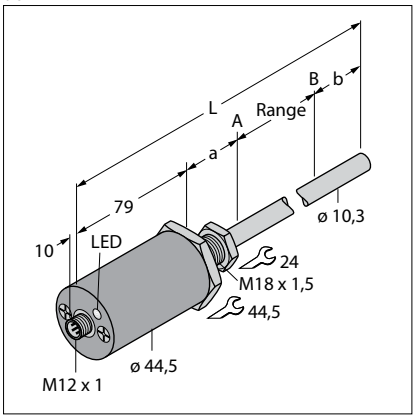

d680

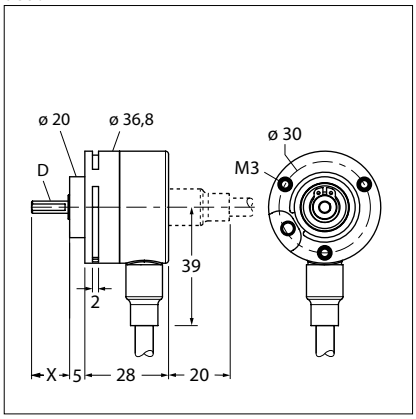

d683

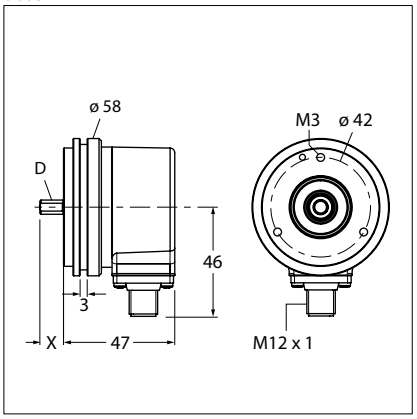

d678

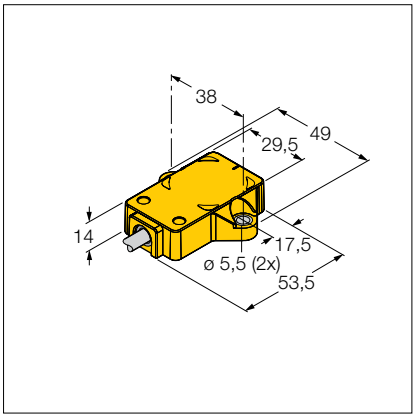

d681

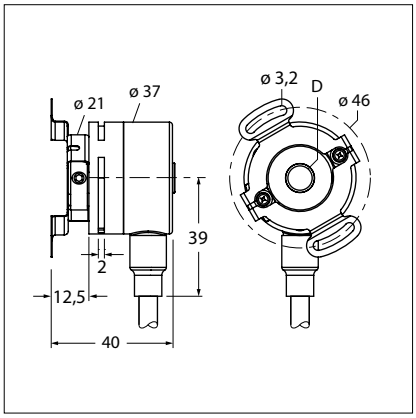

d684

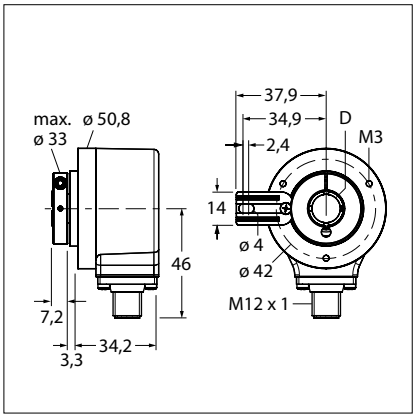

Dimension drawings

d685

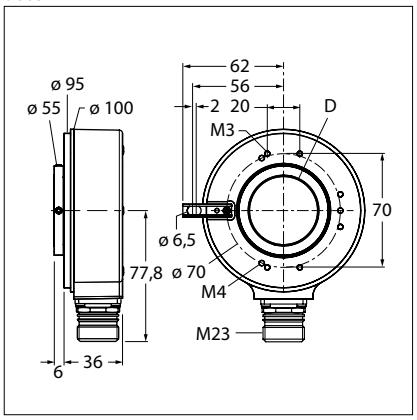

d688

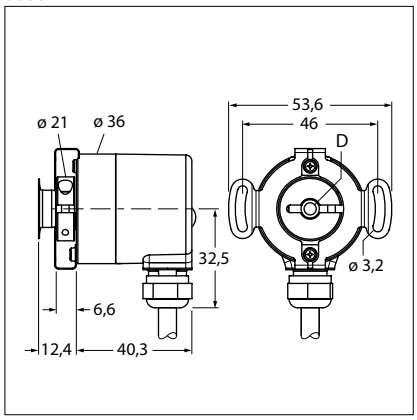

d691

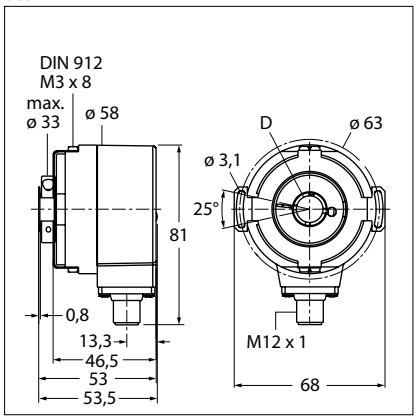

d686

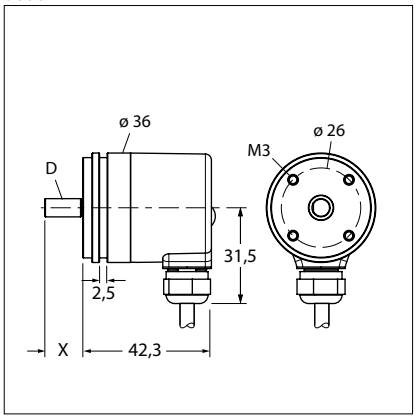

d689

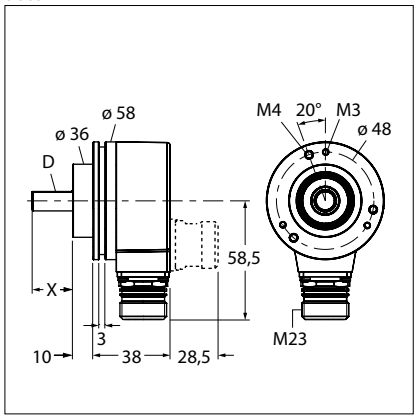

d692

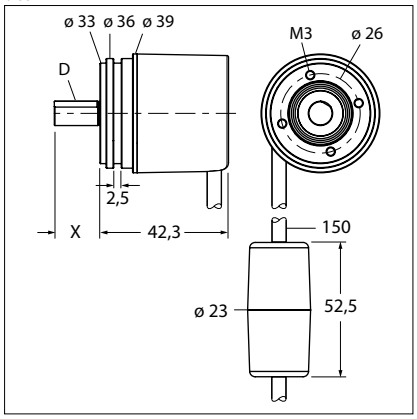

d687

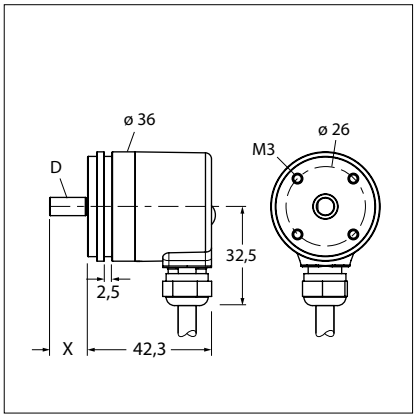

d690

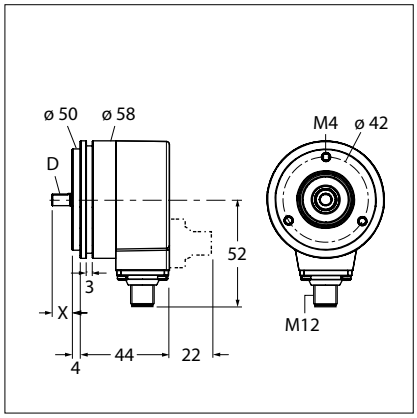

d693

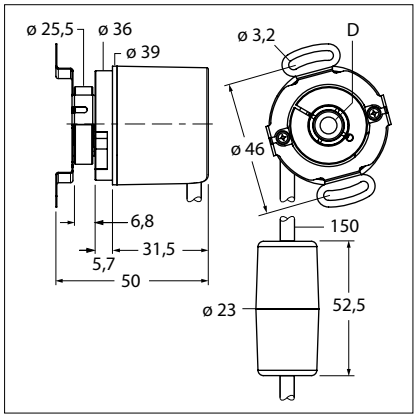

gs in drawings

d694

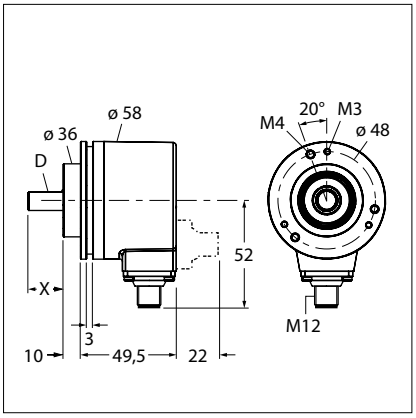

d697

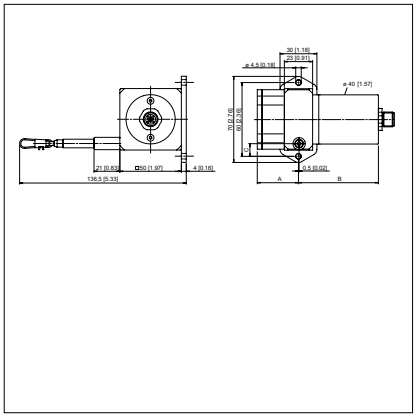

d700

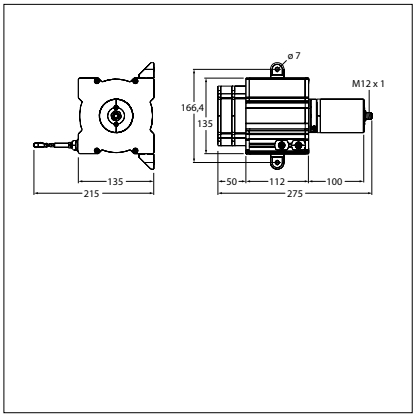

d695

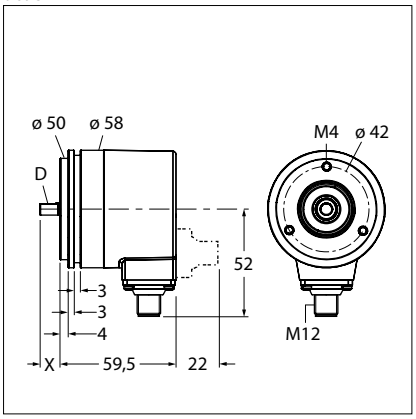

d698

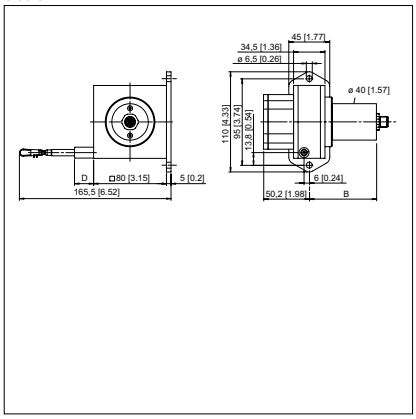

d701

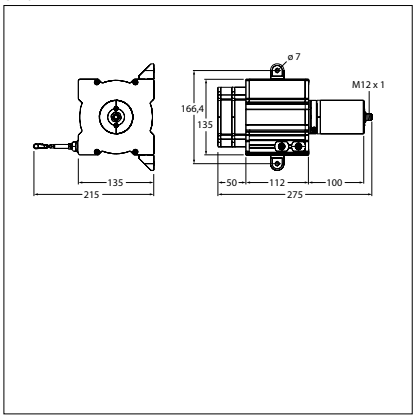

d696

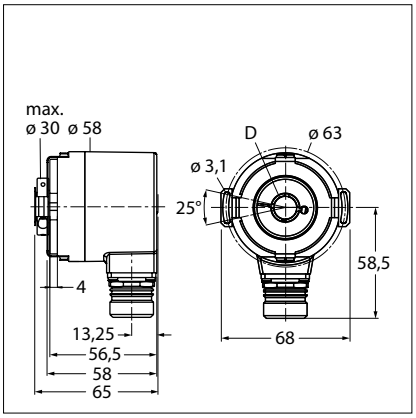

d699

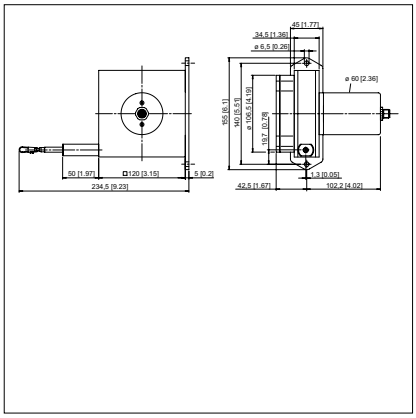

d702

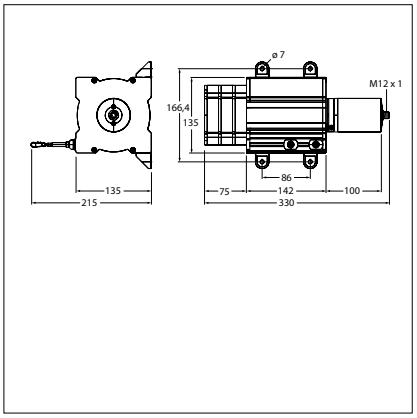

Dimension drawings

Dimension drawings

d703

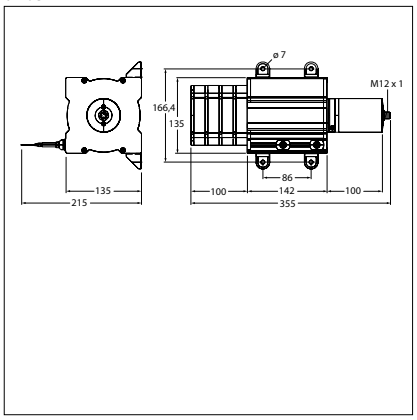

d706

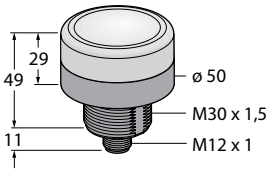

d709

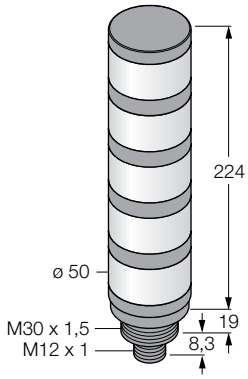

d704

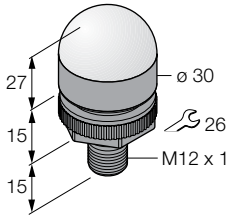

d707

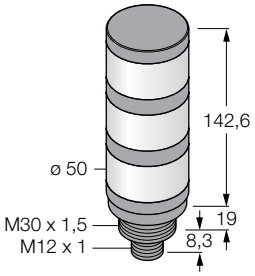

d710

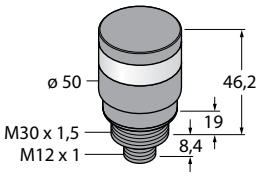

d705

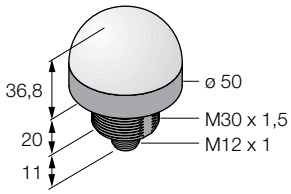

d708

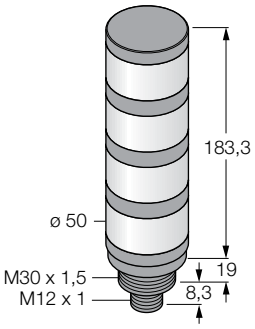

d711

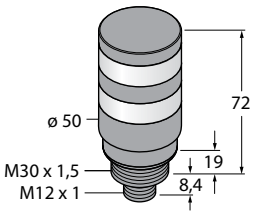

Hans Turck GmbH & Co. KG ▪ Tel. +49 208 49 52-0 ▪ Fax +49 208 49 52-264

gs in drawings

d712

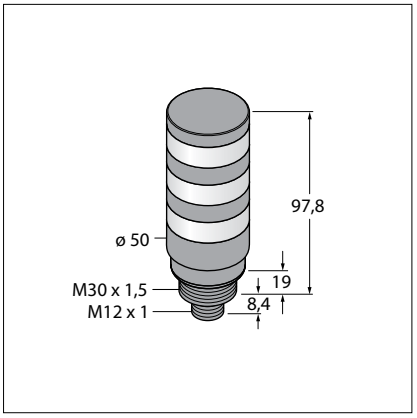

d715

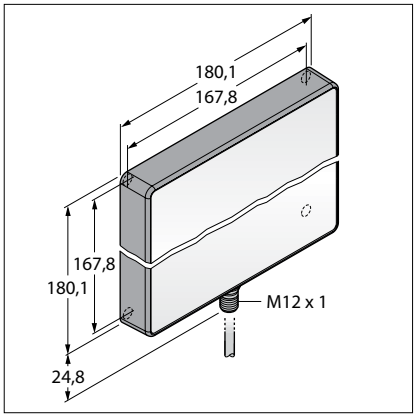

d718

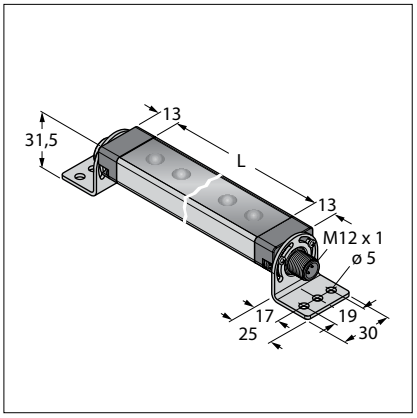

d713

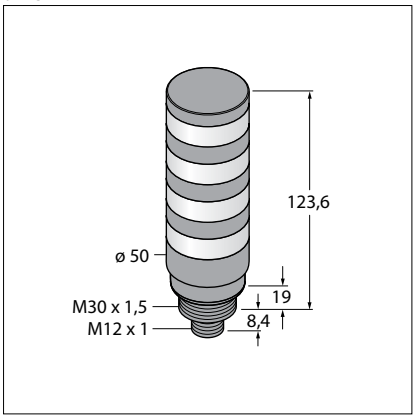

d716

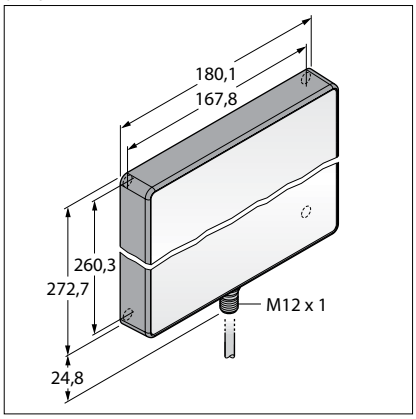

d719

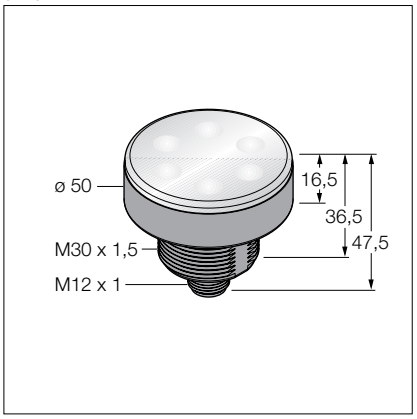

d714

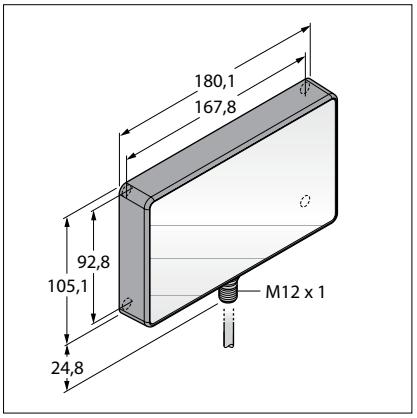

d717

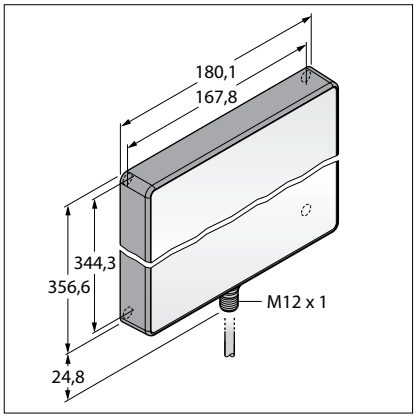

d720

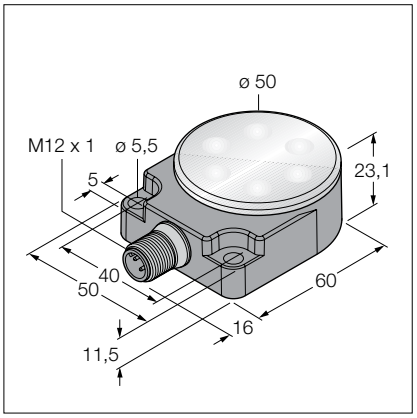

Dimension drawings

d721

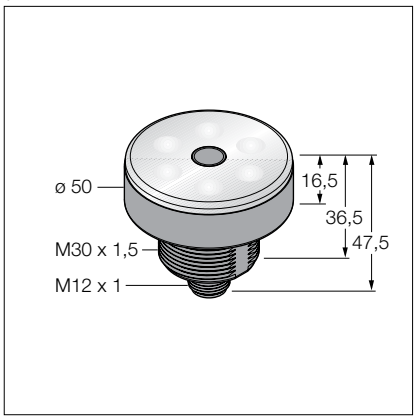

d724

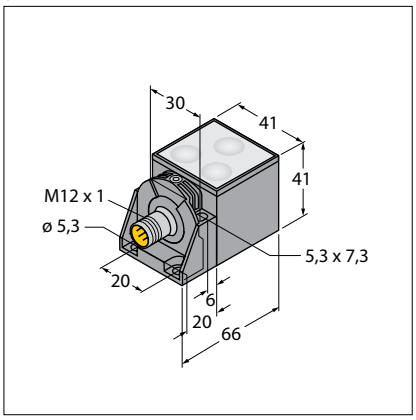

d727

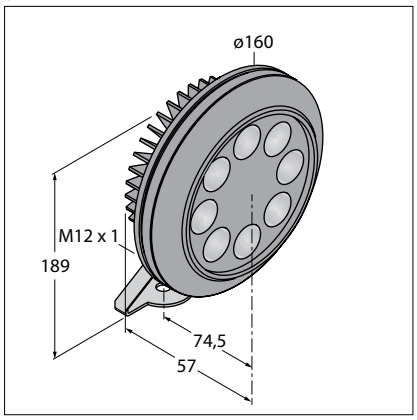

d722

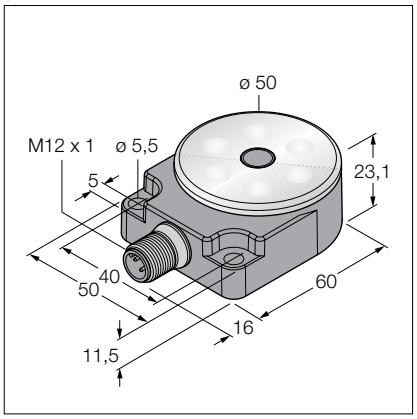

d725

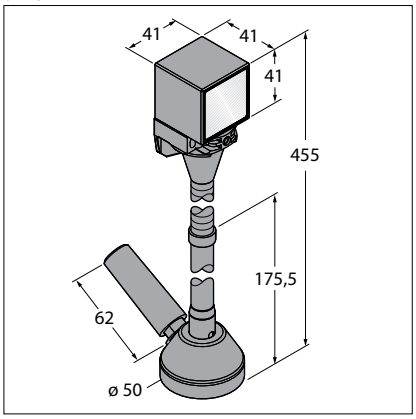

d728

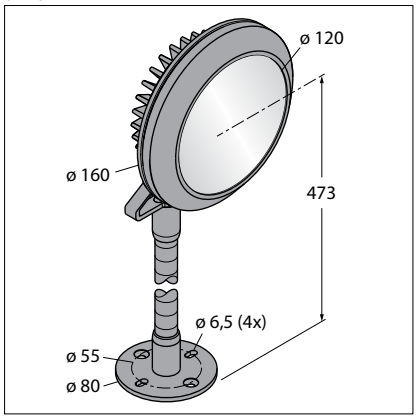

d723

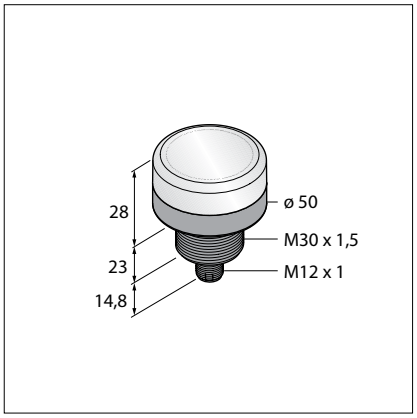

d726

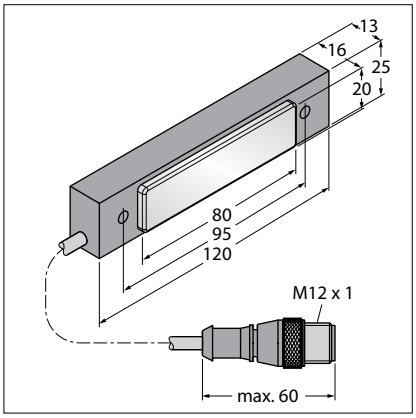

Hans Turck GmbH & Co. KG ▪ Tel. +49 208 49 52-0 ▪ Fax +49 208 49 52-264

gs

Index of types

Type	Ident-Nr.	Page
AB-M5	6901057	589
B1N360V-Q20L60-2Li2-H1151	1534068	489
B1N360V-Q20L60-2LU3-H1151	1534069	489
B1N360V-Q20L60-2UP6X3-H1151	1534051	490
B1N360V-Q42-CNX2-2H1150	1534065	490
B2N10H-Q20L60-2LI2-H1151	1534012	489
B2N10H-Q20L60-2LU3-H1151	1534006	489
B2N10H-Q42-CNX2-2H1150	1534061	490
B2N45H-Q20L60-2LI2-H1151	1534013	489
B2N45H-Q20L60-2LU3-H1151	1534007	489
B2N45H-Q42-CNX2-2H1150	1534062	490
B2N60H-Q20L60-2LI2-H1151	1534014	489
B2N60H-Q20L60-2LU3-H1151	1534008	489
B2N60H-Q42-CNX2-2H1150	1534063	490
B2N85H-Q20L60-2LI2-H1151	1534032	489
B2N85H-Q20L60-2LU3-H1151	1534027	489
BA1.53SMTA	3020879	629
BA23S	3017210	629
BAT23S	3017222	630
BC10-M30K-AZ3X	2503031	176
BC10-M30K-RZ3X	2503025	176
BC10-M30K-VN4X	2503024	40
BC10-M30K-VN4X-H1141	2503033	40
BC10-M30K-VP4X	2503022	176
BC10-M30K-VP4X-H1141	2503035	176
BC10-P30SR-FZ3X2	23104	181
BC10-P30SR-VN4X2	25051	181
BC10-P30SR-VP4X2	25050	181
BC10-P30SR-VP4X2/3GD	2505006	181
BC10-PT30-VN4X2	2507020	181
BC10-PT30-VP4X2	2507010	181
BC10-Q14-AN4X2	2530010	170
BC10-Q14-AN4X2-V1131	2530011	170
BC10-Q14-AP4X2	2530001	170
BC10-Q14-AP4X2-V1131	2530002	170
BC10-Q14-RP4X2	2530014	170
BC10-Q14-VP4X2	2530020	170
BC10-QF5,5-AN6X2	2620121	169
BC10-QF5,5-AP6X2	2620117	169
BC10-QF5,5-RN6X2	2620128	169
BC10-QF5,5-RP6X2	2620126	169
BC10-S30-AZ3X	2310700	180
BC10-S30-RZ3X	2310800	180

Type	Ident-Nr.	Page
BC10-S30-VN4X	2506000	180
BC10-S30-VN4X-H1141	2506010	180
BC10-S30-VP4X	2506110	180
BC10-S30-VP4X-H1141	2506100	180
BC10-S30-Y1X	20100	180
BC15-K34-AN4X-H1141	2502125	182
BC15-K34-AP4X-H1141	2502126	182
BC15-K34-AZ3X	2310008	182
BC15-K34-RZ3X	2310110	182
BC15-K34SR-FZ3X2	2310009	182
BC15-K34SR-VN4X2	2502128	182
BC15-K34SR-VP4X2	2502129	182
BC15-K34-VN4X	2502127	182
BC15-K34-VP4X	2502124	182
BC20-CP40-FZ3X2	23105	171
BC20-CP40-VN4X2	25161	22
BC20-CP40-VP4X2	25160	171
BC20-CP40-VP4X2-H1141	2516102	171
BC20-K40SR-VN4X2	25101	183
BC20-K40SR-VN4X2-H1141	2510104	183
BC20-K40SR-VP4X2	25100	183
BC20-K40SR-VP4X2-H1141	2510002	183
BC20-K40WDTC-VP4X2/S930	2510105	183
BC20-Q20-AN4X2	2530110	69
BC20-Q20-AN4X2-H1141	2530111	69
BC20-Q20-AP4X2	2530100	171
BC20-Q20-AP4X2-H1141	2530101	171
BC20-Q20-AZ3X2	4352000	171
BC20-Q20-RP4X2	2530106	171
BC20-Q20-RP4X2-V1131	2501007	171
BC20-Q20-RZ3X2	4352001	171
BC20-Q20-VN4X2-H1141	2530131	69
BC20-Q20-VP4X2-H1141	2530121	171
BC3-M12-AN6X	2601100	39
BC3-M12-AP6X	2601000	175
BC3-M12-AP6X/S90/3GD	2601003	175
BC3-M12-AP6X-H1141	2601011	175
BC3-M12-RP6X	2601103	175
BC3-S12-AN6X	2601300	179
BC3-S12-AP6X	2601200	179
BC3-S12-AP6X/S100	2601201	179
BC3-S12-RP6X	2601202	179
BC3-S12-RP6X/S90/3GD	2601204	179

Hans Turck GmbH & Co. KG ▪ Tel. +49 (208) 49 52-0 ▪ Fax +49 (208) 49 52-264

Type	Ident-Nr.	Page
BC5-M18-AN4X	2504002	39
BC5-M18-AN4X-H1141/S250	2504025	39
BC5-M18-AP4X	2504001	175
BC5-M18-AP4X-H1141/S250	2504024	39
BC5-M18-AZ3X	2305000	175
BC5-M18-RP4X	2504026	175
BC5-M18-RP4X-H1141/S250	2504023	39
BC5-M18-RZ3X	2305100	175
BC5-Q08-AN6X2/S250	26201	17
BC5-Q08-AN6X2-V1131/S250	26211	17
BC5-Q08-AP6X2/S250	26200	169
BC5-Q08-AP6X2-V1131/S250	26210	169
BC5-Q08-RN6X2/S250	2620150	17
BC5-Q08-RP6X2/S250	2530108	169
BC5-Q08-RP6X2-V1131/S250	2620152	169
BC5-QF5,5-Y1X/S250	2030000	169
BC5-S185-AN4X	2503550	180
BC5-S185-AN4X/S100	2503551	180
BC5-S185-AP4X	25035	180
BC5-S185-AP4X/S100	2503502	180
BC5-S18-AN4X	25031	179
BC5-S18-AN4X-H1141/S250	2503108	179
BC5-S18-AP4X	25030	179
BC5-S18-AP4X-H1141/S250	2503602	179
BC5-S18-AZ3X	2305500	179
BC5-S18-RN4X	2503021	179
BC5-S18-RP4X	2503020	179
BC5-S18-RP4X-H1141/S250	2601209	179
BC5-S18-RZ3X	2305400	179
BC5-S18-Y1X	20060	180
BC8-Q10-AN6X2/S250	2621203	170
BC8-Q10-AN6X2-V1131/S250	2621202	170
BC8-Q10-AP6X2/S250	2621200	170
BC8-Q10-AP6X2-V1131/S250	2621201	170
BC8-Q10-RN6X2/S250	2621199	170
BC8-Q10-RP6X2/S250	2621205	170
BC8-Q10-RP6X2-V1131/S250	2621204	170
BCC10-S30-AP4X	2503037	189
BCC10-S30-AP4X-H1141	2503038	189
BCC10-S30-RP4X	1542561	189
BCC10-S30-VP4X-H1141	2503043	189
BCC10-S30WD-AP4X-H1141	2503052	189
BCF10-Q20L60-AP4X	2504028	186

Type	Ident-Nr.	Page
BCF10-Q20L60-AP4X-H1141	2504027	186
BCF10-S30-AZ3X	2506015	185
BCF10-S30-RZ3X	2506013	185
BCF10-S30-VN4X	2506011	180
BCF10-S30-VN4X-H1141	2506016	180
BCF10-S30-VP4X	2506111	185
BCF10-S30-VP4X-H1141	2506117	185
BCF15-K34-AZ3X	2502136	186
BCF15-K34-RZ3X	2502135	186
BCF5-S18-AN4X	2503012	179
BCF5-S18-AN4X-H1141/S250	2503016	179
BCF5-S18-AP4X	2503011	185
BCF5-S18-AP4X-H1141/S250	2503010	185
BCF5-S18-RN4X	2503008	179
BF23P	3017233	629
BF23S	3017237	629
BI0,8-Q5SE-AP6X	1619341	63
BI1,5-EG08-AN6X	4602340	25
BI1,5-EG08-AN6X-H1341	4602360	25
BI1,5-EG08-AN6X-V1131	4602350	25
BI1,5-EG08-AP6X	4602240	81
BI1,5-EG08-AP6X-H1341	4602260	81
BI1,5-EG08-AP6X-V1131	4602220	81
BI1,5-EG08K-AN6X	4669140	25
BI1,5-EG08K-AN6X-H1341	4669150	25
BI1,5-EG08K-AN6X-V1131	4672540	25
BI1,5-EG08K-AP6X	4669040	81
BI1,5-EG08K-AP6X-H1341	4669050	81
BI1,5-EG08K-AP6X-V1131	4672440	81
BI1,5-EG08K-Y1	1003600	79
BI1,5-EG08K-Y1-H1341	1003620	79
BI1,5-EG08-LU	1533003	122
BI1,5-EG08-LU-H1341	1533004	122
BI1,5-EG08WD-AN6X-H1341	4602211	81
BI1,5-EG08WD-AP6X-H1341	4602210	81, 149
BI1,5-EG08-Y1-H1341	1003502	79
BI1,5-EH04-0,3-M12-SIU-H1141	1533001	127
BI1,5-EH6,5-AN6X-V1131	4612120	25
BI1,5-EH6,5-AP6X-V1131	4612020	98
BI1,5-EH6,5K-AN6X	4610640	25
BI1,5-EH6,5K-AN6X-V1131	4610840	25
BI1,5-EH6,5K-AP6X	4610540	98
BI1,5-EH6,5K-AP6X-V1131	4610740	98

Type	Ident-Nr.	Page
BI1,5-EH6,5K-Y1	1004600	98
BI1,5-EH6,5-LU	1533002	127
BI1,5-GS880-Y1	1004401	79
BI1,5-HS865-AN6X	4604301	25
BI1,5-HS865-AP6X	4604201	98
BI1,5-HS865-Y1	1004201	98
BI1,5U-EG08-AN6X	4600510	25
BI1,5U-EG08-AN6X-H1341	4600550	25
BI1,5U-EG08-AN6X-V1131	4600530	25
BI1,5U-EG08-AP6X	4600500	80
BI1,5U-EG08-AP6X-H1341	4600540	80
BI1,5U-EG08-AP6X-V1131	4600520	80
BI1,5U-EGT08-AN6X-H1341	4600558	25
BI1,5U-EGT08-AP6X-H1341	4600555	80
BI1,5U-EGT08-AP6X-V1131	4600556	80
BI10-EG30SK-Y1X	4012070	90
BI10-EG30-Y1X/S100 7M	4012005	138
BI10-EM30-AP6/S907	4614513	142
BI10-EM30D-VP6X/S120	4617035	141
BI10-EM30WDTC-Y1X	4012071	91, 133, 138
BI10-EM30-Y1X-H1141	4020205	90
BI10-G30K-AN6X	46716	29
BI10-G30K-AP6X	46706	92
BI10-G30SK-AN6X	46481	29
BI10-G30SK-AP6X	46480	92
BI10-G30SK-Y1X	40220	90
BI10-G30-Y1X	40200	90
BI10-M30-AD4X	44170	91
BI10-M30-AD4X-H1141	44175	91
BI10-M30-AN6X	46171	29
BI10-M30-AN6X-H1141	46176	29
BI10-M30-AP6X	46170	92
BI10-M30-AP6X/S120	4617010	141
BI10-M30-AP6X-H1141	46175	92
BI10-M30-AZ3X	43164	94
BI10-M30-AZ3X/S120	4316410	141
BI10-M30E-LIU-H1141	1537003	125
BI10-M30-LIU	15355	125
BI10-M30-Y1X-H1141	40202	90
BI10NF-EM30HE-AN6X2-H1141	1615005	154
BI10NF-EM30HE-AP6X2-H1141	1615002	154
BI10-P30SK-AP6X	46595	92
BI10-P30SK-Y1X	40410	90
BI10-P30SR-AN6X	16203	29
BI10-P30SR-AP6X	16116	92
BI10-P30SR-FZ3X2	13420	94
BI10-P30-Y1/S100	10233	138
BI10-P30-Y1X	40400	90
BI10-P30-Y1X/S97	1023322	133
BI10-Q14-ADZ32X2	4256220	68
BI10-Q14-LIU	1534602	119
BI10-Q14-LIU-V1141	1534603	119
BI10-Q14-Y1X	1608730	68

Type	Ident-Nr.	Page
BI10R-Q14-AN6X2-H1141	1407120	103
BI10R-Q14-AP6X2-H1141	1407100	103
BI10R-W30-DAN6X-H1141	14039	105
BI10R-W30-DAP6X-H1141	14038	105
BI10-S30-AD4X	44590	91
BI10-S30-AZ3X	43554	94
BI10-S30-AZ3X/S100	13719	139
BI10U-CA25-AP6X2-H1141	1625631	70
BI10U-CA25-AP6X2-V1131	1625632	70
BI10U-EG30SK-AN6X	1636420	29
BI10U-EG30SK-AP6X	1636400	92
BI10U-EM30-AN6X	1636320	29
BI10U-EM30-AN6X-H1141	1636350	29
BI10U-EM30-AP6X	1636300	92
BI10U-EM30-AP6X-H1141	1636340	92
BI10U-G30-ADZ30X2-B1131	4281612	94
BI10U-G30-ADZ30X2-B3131	4281613	94
BI10U-M30-AD4X	4405073	29, 91
BI10U-M30-AD4X-H1144	4405072	29, 91
BI10U-M30-ADZ30X2	4282610	94
BI10U-M30-AN6X	1636120	29
BI10U-M30-AN6X-H1141	1636150	29
BI10U-M30-AP6X	1636100	92
BI10U-M30-AP6X-H1141	1636140	92
BI10U-MT30-AD4X-0,3-RS4.23/XOR	4405050	35
BI10U-MT30-AD4X-H1144	4405074	35, 91
BI10U-MT30-AN6X-H1141	1636250	29
BI10U-MT30-AP6X-H1141	1636240	92
BI10U-P30SK-AN6X	1636720	29
BI10U-P30SK-AP6X	1636700	92
BI10U-Q14-AN6X2	1608710	68
BI10U-Q14-AN6X2-V1131	1608510	68
BI10U-Q14-AP6X2	1608700	68
BI10U-Q14-AP6X2-V1131	1608500	68
BI10U-S30-AN6X	1636520	29
BI10U-S30-AN6X-H1141	1636620	29
BI10U-S30-AP6X	1636500	92
BI10U-S30-AP6X-H1141	1636600	92
BI12-G30K-AD4X	4417010	91
BI15-CK40-AD4X-H1141	44650	71
BI15-CK40-AN6X2-H1141	16251	21
BI15-CK40-AP6X2-H1141	16250	71
BI15-CK40-LIU-H1141	1537800	121
BI15-CK40-Y1X-H1141	4065000	71
BI15-CP40-AD4X	44660	72
BI15-CP40-AN6X2	16223	22
BI15-CP40-AP6X2	16023	72
BI15-CP40-FZ3X2	13400	72
BI15-CP40-FZ3X2/S100	13440	134
BI15-CP40-FZ3X2/S97	1341015	130
BI15-CP40-LIU	15356	121
BI15-CP40-VN4X2	15790	22
BI15-CP40-VP4X2	15690	72

Type	Ident-Nr.	Page
BI15-CP40-VP4X2/S100	15045	134
BI15-CP40-VP4X2/S97	15058	130
BI15-CP40-Y1X	10110	72
BI15-CP40-Y1X/S100	10396	134
BI15-CP40-Y1X/S97	10397	130
BI15-M30-AN6X	4618620	29
BI15-M30-AN6X 7M	4618621	29
BI15-M30-AN6X-H1141	4618600	29
BI15-M30-AP6X	4618530	92
BI15-M30-AP6X 7M	4618532	92
BI15-M30-AP6X-H1141	46185	92
BI15-M30E-LIU-H1141	1535563	125
BI15-M30-LI-EXI	1535554	126
BI15-M30-LIU	1535543	125
BI15-M30-LUAP6X	4618510	126
BI15-M30-VN6X	4590717	30
BI15-M30-VN6X 7M	4590714	30
BI15-M30-VN6X-H1141	4590719	30
BI15-M30-VP6X	4590716	93
BI15-M30-VP6X 7M	4590715	93
BI15-M30-VP6X-H1141	4590718	93
BI15-Q20-2LU-H1141/S950	1534611	117
BI15-Q20-LIU	1534600	120
BI15-Q20-LIU-H1141	1534601	120
BI15-Q20-Y1X	1080020	69
BI15-Q20-Y1X-H1141	1080025	69
BI15R-Q14-AN6X2-H1141	1407220	103
BI15R-Q14-AP6X2-H1141	1407200	103
BI15R-W30-DAN6X-H1141	14041	105
BI15R-W30-DAP6X-H1141	14040	105
BI15U-CK40-AD4X-H1144	4280032	21, 71
BI15U-CK40-ADZ30X2-B1131	4280010	71
BI15U-CK40-ADZ30X2-B3131	4280030	71
BI15U-CK40-AN6X2-H1141	1625610	21
BI15U-CK40-AP6X2-H1141	1625600	71
BI15U-CK40-VP4X2-H1141	1568801	71
BI15U-CP40-AN6X2	1623510	22
BI15U-CP40-AP6X2	1623500	72
BI15U-CP40-FDZ30X2	4280600	72
BI15U-CP40-VP4X2	1540500	72
BI15U-CP40-VP4X2-H1141	1540502	72
BI15U-EM30-AP6X-H1141	1636733	29
BI15U-EM30WD-AN6X	1634843	40
BI15U-EM30WD-AN6X-H1141	1634834	40
BI15U-EM30WD-AN6X-H1141/3GD	1634856	29
BI15U-EM30WD-AP6X	1634819	40, 92, 133, 139, 151
BI15U-EM30WD-AP6X-H1141	1634820	40, 92, 133, 139, 151
BI15U-EM30WD-AP6X-H1141/3GD	1634855	92
BI15U-EM30WDTC-AP6X	1634764	40, 92, 133, 139
BI15U-EM30WD-VP44X-H1141	1634899	151
BI15U-M30-AN6X	1636735	29

Type	Ident-Nr.	Page
BI15U-M30-AN6X-H1141	1636736	29
BI15U-M30-AP6X	1636731	29, 92
BI15U-M30-AP6X-H1141	1636732	29, 92
Bi15U-M30-RP6X-H1141	1636739	92
BI15U-M30-VN44X	1634888	30
BI15U-M30-VN44X-H1141	1634889	30
BI15U-M30-VP44X	1634884	30, 93
BI15U-M30-VP44X-H1141	1634885	30, 93
BI15U-MT30-AN6X-H1141	1636738	29
BI15U-MT30-AP6X-H1141	1636734	36, 92
BI15U-Q20-AN6X2	1608810	69
BI15U-Q20-AN6X2-H1141	1608610	69
BI15U-Q20-AP6X2	1608800	69
BI15U-Q20-AP6X2-H1141	1608600	69
BI1-EG05-AN6X	4609840	79
BI1-EG05-AN6X-V1331	4608740	79
BI1-EG05-AP6X	4609740	79
BI1-EG05-AP6X-V1331	4608640	79
BI1-EG05-RP6X	4609750	79
BI1-EG05-RP6X-V1331	4609752	79
BI1-EG05-Y1	1003240	79
BI1-EH03-AN7X	1619323	97
BI1-EH03-AP7X	1619322	97
BI1-EH04-AN6X	4609640	97
BI1-EH04-AN6X-V1331	4608540	97
BI1-EH04-AP6X	4609540	97
BI1-EH04-AP6X-V1331	4608440	97
BI1-EH04-RP6X	4608442	97
BI1-EH04-RP6X-V1331	4608441	97
BI1-EH04-Y1	1003040	97
BI1-HS540-AN6X	4604101	97
BI1-HS540-AP6X	4604001	97
BI1-HS540-RP6X	4604050	97
BI1-HS540-Y1	1004001	97
BI1-Q6,5-AP6/S34	4613401	64
BI2,5FE-EM12FE-AP6X-H1141	1615011	153
BI20-CP40-Y1X	1011123	72
BI20-G47-AN4X	15745	94
BI20-G47-AP4X	15645	94
BI20-G47-AZ3X	13088	94
BI20-G47-Y1X	10202	94
BI20R-Q14-AN6X2-H1141	1407320	103
BI20R-Q14-AP6X2-H1141	1407300	103
BI20R-Q14-LU	1535546	120
BI20R-Q14-LU-H1141	1535548	104, 120
BI20R-W30-DAN6X-H1141	14043	105
BI20R-W30-DAP6X-H1141	14042	105
BI20U-CK40-AN6X2-H1141	1627231	21
BI20U-CK40-AP6X2-H1141	1627233	21, 71
BI20U-CK40-VN4X2-H1141	1568814	21
BI20U-CK40-VP4X2-H1141	1627216	71
BI20U-CP40-AN6X2	1627230	22
BI20U-CP40-AP6X2	1627232	22, 72

Type	Ident-Nr.	Page
BI20U-CP40-VN4X2	1627237	22
BI20U-CP40-VP4X2	1627240	72
BI20U-QV40-AP6X2-H1141	1627245	21, 73
BI25-G47SR-FZ3X2	13427	94
BI25-G47SR-VN4X2	15748	94
BI25-G47SR-VP4X2	15648	94
BI2-EG08-AG41X	4562000	80
BI2-EG08-AG41X-H1341	4562001	80
BI2-EG08-AN6X	4602140	25
BI2-EG08-AN6X/S100	4602108	135
BI2-EG08-AN6X-H1341	4602160	25
BI2-EG08-AN6X-V1131	4602150	25
BI2-EG08-AP6X	4602040	81
BI2-EG08-AP6X/S100	4602047	135
BI2-EG08-AP6X-H1341	4602060	80
BI2-EG08-AP6X-V1131	4602050	80
BI2-EG08-AZ14X	4100001	82
BI2-EG08K-AN6X	4669500	25
BI2-EG08K-AN6X-H1341	4669560	25
BI2-EG08K-AN6X-V1131	4669550	25
BI2-EG08K-AP6X	4669400	81
BI2-EG08K-AP6X-H1341	4669460	80
BI2-EG08K-AP6X-V1131	4669450	80
BI2-EG08K-VN6X-H1341	4669419	81
BI2-EG08K-VP6X-H1341	4669416	81
BI2-EG08-VP6X-H1341	4602522	81
BI2-EG12SK-Y1X	4012050	82
BI2-EG12-Y1X/S100 7M	4012003	135
BI2-EH6,5-AN6X	4612300	25
BI2-EH6,5-AN6X-V1131	4612320	25
BI2-EH6,5-AP6X	4612200	98
BI2-EH6,5-AP6X-V1131	4612220	98
BI2-EH6,5K-AN6X	4610100	25
BI2-EH6,5K-AN6X-V1131	4610120	25
BI2-EH6,5K-AP6X	4610000	98
BI2-EH6,5K-AP6X-V1131	4610020	98
BI2-EH6,5K-RP6X	4610001	98
BI2-EH6,5K-RP6X-V1131	4610021	98
BI2-EM12D-AP6/S120	4614512	140
BI2-EM12WD-AP6/S929	4614515	129
BI2-EM12WDTC-Y1X	4012051	82, 131, 135
BI2-EM12-Y1X-H1141	4010201	82
BI2-G12K-AN6X	46712	26
BI2-G12K-AP6X	46702	84
BI2-G12K-AP6X-H1141	4670260	84
BI2-G12SK-AN6X	46361	26
BI2-G12SK-AP6X	46360	84
BI2-G12SK-Y1X	40110	82
BI2-G12-Y1X	40100	82
BI2-K11-AP6X	46609	99
BI2-K11SK-AP6X	46615	99
BI2-K11-Y1	10070	99
BI2-M12-AD4X	44050	83

Type	Ident-Nr.	Page
BI2-M12-AD4X-H1141	44065	83
BI2-M12-AN6X	46051	26
BI2-M12-AN6X-H1141	46066	26
BI2-M12-AP6X	46050	84
BI2-M12-AP6X-H1141	46065	84
BI2-M12-AZ31X	13030	86
BI2-M12-LIU	1535534	123
BI2-M12-LIU-H1141	1535533	123
BI2-M12-Y1X-H1141	40102	82
BI2-P12SK-AN6X	46536	26
BI2-P12SK-AP6X	46535	84
BI2-P12SK-Y1X	40310	82
BI2-P12-Y1/S100	10302	135
BI2-P12-Y1X	40300	82
BI2-P12-Y1X/S97	4030021	131
BI2-Q10S-AN6X	1619310	18
BI2-Q10S-AP6X	1609360	67
BI2-Q10S-AP6X-0,2-PSG3M	1609303	67
BI2-Q10S-AZ31X	1309100	67
BI2-Q10S-VN6X	1609341	18
BI2-Q10S-VP6X	1609340	67
BI2-Q10S-Y1X	4012130	67
BI2-Q12-AZ31X	13100	68
BI2-Q5,5-AN6X	1613100	63
BI2-Q5,5-AP6X	1613000	63
BI2-S12-AD4X	44530	83
BI2-S12-AZ31X	13020	86
BI2-S12-AZ31X/S100	1302001	136
BI2U-EG08-AN6X	4602035	25
BI2U-EG08-AN6X-H1341	4602037	25
BI2U-EG08-AN6X-V1131	4602036	25
BI2U-EG08-AP6X	4602032	25, 80
BI2U-EG08-AP6X-H1341	4602034	25, 80
BI2U-EG08-AP6X-V1131	4602033	25, 80
BI2U-EG08-RP6X-H1341	4602080	25, 80
BI2U-EG08-RP6X-V1131	4602091	25, 80
BI2U-EGT08-AP6X-H1341	4602071	33, 80
BI2U-EGT08-AP6X-V1131	4602070	80
BI2U-EH6,5-AN6X	4281170	25
BI2U-EH6,5-AN6X-V1131	4281180	25
BI2U-EH6,5-AP6X	4281150	25, 98
BI2U-EH6,5-AP6X-V1131	4281160	25, 98
BI2U-EH6,5-RP6X	4281151	98
BI2U-EH6,5-RP6X-V1131	1637151	98
BI2U-G12-ADZ32X-B3131	4281005	86
BI2U-M12E-AD4X	4405062	26, 83
BI2U-M12E-AD4X-H1144	4405060	26, 83
BI2U-MT12E-AD4X-0,3-RS4.23/X0R	4405048	33
BI2U-MT12E-AD4X-H1144	4405061	83
BI30R-Q20-AN6X2-H1141	1407520	104
BI30R-Q20-AP6X2-H1141	1407500	104
BI30R-W30-DAN6X-H1141	1404501	105
BI30R-W30-DAP6X-H1141	14045	105

Type	Ident-Nr.	Page
BI30U-CK40-AN6X2-H1141	1625820	21
BI30U-CK40-AP6X2-H1141	1625829	21, 71
BI30U-CP40-AN6X2	1625102	22
BI30U-CP40-AP6X2	1625830	22, 72
BI3-G12K-AD4X	4405030	83
BI3-M12-AD4X	4405035	83
BI3NF-EM12HE-AN6X2-H1141	1615003	153
BI3NF-EM12HE-AP6X2-H1141	1615001	153
BI3-Q06-AN6X2	1620150	64
BI3-Q06-AP6X2	1620100	64
BI3U-EG12SK-AN6X	1634420	26
BI3U-EG12SK-AP6X	1634400	84
BI3U-EM12-AN6X	1634320	26
BI3U-EM12-AN6X-H1141	1634350	26
BI3U-EM12-AP6X	1634300	84
BI3U-EM12-AP6X-H1141	1634340	84
BI3U-M12-AN6X	1634120	26
BI3U-M12-AN6X-H1141	1634150	26
BI3U-M12-AP6X	1634100	84
BI3U-M12-AP6X-H1141	1634140	84
BI3U-M12EE-AP6X-H1141	1634149	84
BI3U-M12E-VN4X-H1141	1580354	27
BI3U-M12E-VP4X-H1141	1580252	85
BI3U-MT12-AN6X-H1141	1634250	26
BI3U-MT12-AP6X-H1141	1634240	84
BI3U-P12SK-AN6X	1634720	26
BI3U-P12SK-AP6X	1634700	84
BI3U-S12-AN6X	1634520	26
BI3U-S12-AN6X-H1141	1634620	26
BI3U-S12-AP6X	1634500	84
BI3U-S12-AP6X-H1141	1634600	84
BI40-CP80-FZ3X2	13404	75
BI40-CP80-VN4X2	15797	75
BI40-CP80-VP4X2	15697	75
BI40-CP80-VP4X2-H1141	1569702	75
BI4-G12K-AN6X	4670251	26
BI4-G12K-AP6X	4670250	84
BI4-M12-AN6X	4607130	26
Bi4-M12-AN6X 7M	4607131	26
BI4-M12-AN6X-H1141	46071	26
BI4-M12-AP6X	4607006	84
BI4-M12-AP6X 7M	4607012	84
BI4-M12-AP6X-H1141	46070	84
BI4-M12-LIU	1535532	123
BI4-M12-LIU-H1141	1535531	123
BI4-M12-VN6X	1643300	27
Bi4-M12-VN6X 7M	1643301	27
BI4-M12-VN6X-H1141	1643200	27
BI4-M12-VP6X	1633300	85
Bi4-M12-VP6X 7M	1633301	27
BI4-M12-VP6X-H1141	1633200	85
BI4U-EM12EWD-VP44X-H1141	1634905	149
BI4U-EM12WD-AN6X	1634842	39

Type	Ident-Nr.	Page
BI4U-EM12WD-AN6X-H1141	1634841	39
BI4U-EM12WD-AP6X	1634811	39, 84, 131, 136, 149
BI4U-EM12WD-AP6X-H1141	1634812	39, 84, 131, 136, 149
BI4U-EM12WD-AP6X-H1141/3GD	1634851	84
BI4U-EM12WDTC-AP6X	1634760	39, 84, 131, 136
BI4U-M12-AN6X	1634823	26
BI4U-M12-AN6X-H1141	1634824	26
BI4U-M12-AN6X-V1131	1635430	26
BI4U-M12-AP6X	1634803	26, 84
BI4U-M12-AP6X-H1141	1634804	26, 84
BI4U-M12-AP6X-V1131	1634780	26, 84
BI4U-M12E-VN44X	1634872	27
BI4U-M12E-VN44X-H1141	1634873	27
BI4U-M12E-VP44X	1634868	27, 85
BI4U-M12E-VP44X-H1141	1634869	27, 85
Bi4U-M12-RP6X-H1141	1634846	26, 84
BI4U-M12-VP44X-H1141 L100	1634917	27, 85
BI4U-M12-VP44X-H1141 L80	1634918	27, 85
BI4U-MT12-AN6X-H1141	1634829	26
BI4U-MT12-AP6X-H1141	1634809	34, 84
BI50-Q80-Y1X	1008701	23
BI50R-Q80-2LU-H1141/S950	1534609	118
BI50R-Q80-AP6X2-H1141	1407530	105
BI50U-Q80-AN6X2-H1141	1608944	23
BI50U-Q80-AP6X2-H1141	1608940	23
BI50U-Q80-VN4X2-H1141	1562001	23
BI50U-Q80-VP4X2-H1141	1562000	23
BI50U-Q80-VP4X2-H1141/3GD	1562004	23
BI5-EG18SK-Y1X	4012060	86
BI5-EG18-Y1X/S100 7M	4012007	137
BI5-EM18-AP6/S907	4617425	142
BI5-EM18D-VP6X/S120	4614900	141
BI5-EM18WD-AP6X/S929	4614902	129
BI5-EM18WDTC-Y1X	4012061	86, 132, 137
BI5-EM18-Y1X-H1141	4015202	86
BI5-G18K-AP6X	46704	88
BI5-G18KK-AP6-H1141	4670410	88
BI5-G18SK-AN6X	46421	28
BI5-G18SK-AP6X	46420	88
BI5-G18SK-Y1X	40160	86
BI5-G18-Y1X	40150	86
BI5-M18-AD4X	44110	87
BI5-M18-AD4X-H1141	44145	87
BI5-M18-AN6X	46111	28
BI5-M18-AN6X-H1141	46146	28
BI5-M18-AP6X	46110	88
BI5-M18-AP6X/S120	4611030	141
BI5-M18-AP6X-H1141	46145	88
BI5-M18-AZ3X	43104	90
BI5-M18-AZ3X/S120	4310410	141
BI5-M18E-LIU-H1141	1536205	123

Type	Ident-Nr.	Page
BI5-M18-LIU	1536000	123
BI5-M18-Y1X-H1141	40152	86
BI5NF-EM18HE-AN6X2-H1141	1615004	39
BI5NF-EM18HE-AP6X2-H1141	1615000	154
BI5-P18-AP6/S139-S90	1660350	147
BI5-P18-AZ3/S139-S90	13843	90, 147
BI5-P18SK-AN6X	46566	28
BI5-P18SK-AP6X	46565	88
BI5-P18SK-Y1X	40360	86
BI5-P18-Y1/S100	10245	137
BI5-P18-Y1X	40350	86
BI5-P18-Y1X/S97	4035001	132
BI5-Q08-VN6X2	16002	17
BI5-Q08-VP6X2	16001	65
BI5-Q08-Y1X	4054000	65
BI5-S18-AD4X	44560	87
BI5-S18-AZ3X	43504	90
BI5-S18-AZ3X/S100	13734	138
BI5U-EG18SK-AN6X	1635420	28
BI5U-EG18SK-AP6X	1635400	88
BI5U-EM18-AN6X	1635320	28
BI5U-EM18-AN6X-H1141	1635350	28
BI5U-EM18-AP6X	1635300	88
BI5U-EM18-AP6X-H1141	1635340	88
BI5U-G18-ADZ30X2-B1331	4281212	90
BI5U-G18-ADZ30X2-B3331	4281213	90
BI5U-M18-ADZ30X2	4282210	90
BI5U-M18-AN6X	1635120	28
BI5U-M18-AN6X-H1141	1635150	28
BI5U-M18-AP6X	1635100	88
BI5U-M18-AP6X-H1141	1635140	88
BI5U-M18M-AD4X	4405067	27
BI5U-M18M-AD4X-H1144	4405066	27, 87
BI5U-MT18-AN6X-H1141	1635250	28
BI5U-MT18-AP6X-H1141	1635240	88
BI5U-MT18E-AP6X-H1141	1635248	88
BI5U-MT18M-AD4X-0,3-RS4.23/XOR	4405049	34
BI5U-MT18M-AD4X-H1144	4405068	34, 87
BI5U-P18SK-AN6X	1635720	28
BI5U-P18SK-AP6X	1635700	88
BI5U-Q08-AN6X2	1608911	17
BI5U-Q08-AN6X2-V1131	1608910	17
BI5U-Q08-AP6X2	1608901	65
BI5U-Q08-AP6X2-0,5XOR-RS4	1608925	65
BI5U-Q08-AP6X2-1XOR-RS4	1608921	65
BI5U-Q08-AP6X2-V1131	1608900	65
BI5U-Q08-AP6X2-V2131	1608905	65
BI5U-Q12-AN6X2	1635523	19
BI5U-Q12-AN6X2-H1141	1635527	19
BI5U-Q12-AN6X2-V1131	1635525	19
BI5U-Q12-AP6X2	1635522	19, 68
BI5U-Q12-AP6X2-H1141	1635526	19, 68
BI5U-Q12-AP6X2-V1131	1635524	19, 68

Type	Ident-Nr.	Page
BI5U-Q12-AP6X2-V1131/F2	1635528	19
BI5U-Q12-VN6X2 7M	1635531	19
BI5U-Q12-VP6X2 7M	1635529	68
BI5U-S18-AN6X	1635520	28
BI5U-S18-AN6X-H1141	1635620	28
BI5U-S18-AP6X	1635500	88
BI5U-S18-AP6X-H1141	1635600	88
BI65R-Q80-AP6X2-H1141	1407531	105
BI6R-Q14-AN6X2-H1141	1407020	103
BI6R-Q14-AP6X2-H1141	1407000	103
BI6R-W30-DAN6X-H1141	14037	105
BI6R-W30-DAP6X-H1141	14036	105
BI7-G18K-AD4X	4414540	87
BI7-M18-AD4X	4414535	87
BI7-M18-AD4X-H1141	4414541	87
BI7-Q08-LIU	1534605	119
BI7-Q08-VN6X2	1600920	17
BI7-Q08-VN6X2-V1141	1600922	17
BI7-Q08-VP6X2	1600900	65
BI7-Q08-VP6X2-V1141	1600902	65
BI8-M18-AN6X	4615130	28
BI8-M18-AN6X 7M	4615131	28
BI8-M18-AN6X-H1141	4615100	28
BI8-M18-AP6X	4615030	88
BI8-M18-AP6X 7M	4615031	88
BI8-M18-AP6X-H1141	46150	88
BI8-M18E-LIU-H1141	1535561	123
BI8-M18K-AP6X-H1141	4615050	88
BI8-M18-LI-EXI	1535528	124
BI8-M18-LIU	1535538	123
BI8-M18-LUAP6X	4615010	124
Bi8-M18-VN6X	4605155	28
Bi8-M18-VN6X 7M	4590705	28
Bi8-M18-VN6X-H1141	4605157	28
Bi8-M18-VP6X	4605154	28
Bi8-M18-VP6X 7M	4590706	28
Bi8-M18-VP6X-H1141	4605156	28
BI8U-EM18-AP6X-H1141	1644734	28
BI8U-EM18MWD-VN44X-H1141	1635127	39
BI8U-EM18MWD-VP44X-H1141	1634897	150
BI8U-EM18WD-AN6X	1634840	39
BI8U-EM18WD-AN6X-H1141	1634839	39
BI8U-EM18WD-AN6X-H1141/3GD	1634854	28
BI8U-EM18WD-AP6X	1634815	39, 88, 132, 137, 150
BI8U-EM18WD-AP6X-H1141	1634816	39, 88, 132, 137, 150
BI8U-EM18WD-AP6X-H1141/3GD	1634853	88
BI8U-EM18WDTC-AP6X	1634762	39, 88, 132, 137
BI8U-M18-AN6X	1644736	28
BI8U-M18-AN6X-H1141	1644737	28
BI8U-M18-AP6X	1644733	28, 88
BI8U-M18-AP6X-H1141	1644731	28, 88

Type	Ident-Nr.	Page
BI8U-M18E-AN6X-H1141	1644751	28
BI8U-M18E-AP6X-H1141	1644735	28, 88
BI8U-M18M-VN44X	1634880	28
BI8U-M18M-VN44X-H1141	1634881	28
BI8U-M18M-VP44X	1634876	28, 89
BI8U-M18M-VP44X-H1141	1634877	28, 89
BI8U-M18-RP6X-H1141	1644750	28, 88
BI8U-MT18-AN6X-H1141	1644739	28
BI8U-MT18-AP6X-H1141	1644730	35, 88
BI8U-MT18E-AP6X-H1141	1644752	88
BI8U-Q08-AN6X2	1662007	17
BI8U-Q08-AN6X2-V1131	1662008	17
BI8U-Q08-AP6X2	1662006	17, 65
BI8U-Q08-AP6X2-V1131	1662005	17, 65
BI8U-Q10-AN6X2	1662003	67
BI8U-Q10-AN6X2-V1131	1662004	67
BI8U-Q10-AP6X2	1662001	67
BI8U-Q10-AP6X2-V1131	1662002	67
BID2-G180-AP6/S212	1688003	150
BID2-G180-AP6/S220	16880	150
BID2-G180-AP6-H1141/S212	16885	150
BID2-G180-AP6-H1141/S220	1688501	150
BIM-EG08-AN6X	4621300	122
BIM-EG08-AN6X-H1341	4621301	122
BIM-EG08-AP6X	4621310	209
BIM-EG08-AP6X-H1341	4621311	209
BIM-EG08-AP6X-V1131	4621314	209
BIM-EG08-Y1X	1074000	209
BIM-EG08-Y1X-H1341	1074001	209
BIM-EM12E-AP4X	1579918	209
BIM-EM12E-AP4X-H1141	1579915	209
BIM-EM12E-Y1X	1070036	209
BIM-IKT-AN6X	46201	205
BIM-IKT-AN6X-H1141	46211	205
BIM-IKT-AN6X-V1131	46221	205
BIM-IKT-AP6X	46200	207
BIM-IKT-AP6X-H1141	46210	207
BIM-IKT-AP6X-V1131	46220	207
BIM-IKT-Y1X	10560	207
BIM-IKT-Y1X-H1141	10562	207
BIM-M12E-AN4X	1579912	39
BIM-M12E-AN4X-H1141	1579914	39
BIM-M12E-Y1X-H1141	1074003	209
BIM-NST-AN6X	4685700	199
BIM-NST-AN6X-H1141	4685500	199
BIM-NST-AN6X-H1141/S34	4685501	199
BIM-NST-AP6X	4685600	207
BIM-NST-AP6X-H1141	4685400	207
BIM-NST-AP6X-H1141/S34	4685401	207
BIM-NST-AP6X-V1131	4685800	207
BIM-NST-Y1X	1058400	207
BIM-NST-Y1X-H1141	1058600	207
BIM-UNR-AN6X	4685837	203

Type	Ident-Nr.	Page
BIM-UNR-AN6X-0,3-PSG3M	4586839	203
BIM-UNR-AN6X-0,3-PSG3S	4685838	203
BIM-UNR-AN6X-0,3-RS4	4586840	203
BIM-UNR-AP6X	4685830	203
BIM-UNR-AP6X 7M	4685834	203
BIM-UNR-AP6X-0,3-PSG3M	4685832	203
BIM-UNR-AP6X-0,3-PSG3S	4685831	203
BIM-UNR-AP6X-0,3-RS4	4685833	203
BIM-UNT-0,3-UNT-2AP6X3-H1141	4685730	200
BIM-UNT-0,3-UNT-2AP6X3-V1141	4685754	200
BIM-UNT-AG41X/S1139/S1160	4685766	200
BIM-UNT-AG41X-0,3-RS4.23/S1139/S1160	4685768	200
BIM-UNT-AN6X	4685702	199
BIM-UNT-AN6X-0,3-PSG3M	4685706	199
BIM-UNT-AN6X-0,3-PSG3S	4685705	199
BIM-UNT-AN6X2-H1141	4685759	200
BIM-UNT-AN6X2-V1131	4685753	200
BIM-UNT-AP6X	4685720	199
BIM-UNT-AP6X 7M	4685721	199
BIM-UNT-AP6X/3GD	4685736	199
BIM-UNT-AP6X/S1139	4685729	199
BIM-UNT-AP6X/S1160	4685761	199
BIM-UNT-AP6X-0,3-PSG3M	4685723	199
BIM-UNT-AP6X-0,3-PSG3M/S1139	4685744	199
BIM-UNT-AP6X-0,3-PSG3S	4685722	199
BIM-UNT-AP6X-0,3-PSG3S/S1139	4685743	199
BIM-UNT-AP6X-0,3-RS4	4685725	199
BIM-UNT-AP6X-0,3-RS4/S1139	4685731	199
BIM-UNT-AP6X-0,3-RS4/S1160	4685733	200
BIM-UNT-AP6X2-H1141	4685726	200
BIM-UNT-AP6X2-V1131	4685727	200
BIM-UNT-AY1X/S1139	4685763	199
BIM-UNT-AY1X-0,3-RS4.21/S1139	4685765	199
BMT16.6S-HT	3064397	629
BP13P	3017254	629
BR23S	3017261	629
BRF50H (1M)	3721000	620
BRF75H (1M)	3412400	620
BRT-100X18A	3044998	618
BRT-100X50	3045000	618
BRT-100X55A	3045001	618
BRT-25	37419	618
BRT-250	3073713	618
BRT-25R	3049809	619
BRT-2A	3015970	619
BRT-40	37420	618
BRT-40X18A	3044991	617
BRT-40X23	3044993	618
BRT-40X23B	3044992	617
BRT-42A	3045005	619
BRT-42D	3045006	619
BRT-46	3040071	617
BRT-48X32	3044994	618

Type	Ident-Nr.	Page
BRT-48X32A	3044995	617
BRT-48X32B	3044999	617
BRT-4HT	3018528	617
BRT-50R	3049814	619
BRT-53X19A	3044996	617
BRT-60X40C	3044997	617
BRT-75	37421	619
BRT-77X77C	3049816	617
BRT-84	3058979	619
BRT-92X92C	3049808	617
BS 11	69462	572
BS 12	69470	570
BS 18	69471	570
BS 20	69464	572
BS 40	69466	572
BS 540	69475	571
BS 865	69476	571
BS34.1	6946010	572
BSN 18	69472	570
BSS-08	6901322	570
BSS-12	6901321	570
BSS-18	6901320	571
BSS-30	6901319	571
BSS-CP40	6901318	570
BST-08B	6947210	570
BST-08N	6947211	570
BST-12B	6947212	570
BST-12N	6947213	570
BST-18B	6947214	571
BST-18N	6947215	571
BST-30B	6947216	571
BST-30N	6947217	571
BT13SM8	3022452	629
BT23PM6	3904100	629
BT23S	3017276	630
BT23SM8	3017277	629
BT26S	3017285	630
BTA23S	3020008	630
BTS-DSC26-EB1	6900222	579
BTS-DSC26-EB2	6900223	579
BTS-DSC26-EB3	6900224	579
BTS-DSU35-EB1	6900225	579
BTS-DSU35-EBE1	6900226	579
BTS-DSU35-EBE3	6901070	579
BTS-DSU35-EU2	6900455	579
BTS-DSU35-Z01	6900229	580
BTS-DSU35-Z02	6900230	580
BTS-DSU35-Z03	6900231	580
BTS-DSU35-Z04	6900286	580
BTS-DSU35-Z05	6900287	580
BTS-DSU35-Z06	6900402	580
BTS-DSU35-Z07	6900403	580
CA100	6901064	590

Type	Ident-Nr.	Page
CA200	6901065	590
CA300	6901066	590
CA400	6901067	590
CF-M-3-G1/4-A4	9910407	611
CF-M-3-G1/8-A4	9910405	610
CF-M-3-N1/4-A4	9910408	611
CF-M-3-N1/8-A4	9910406	610
CF-M-6-G1/4-A4	9910483	611
CF-M-6-N1/4-A4	9910484	611
CF-P-3-G1/4-A4	9910411	611
CF-P-3-G1/8-A4	9910409	611
CF-P-3-N1/4-A4	9910412	611
CF-P-3-N1/8-A4	9910410	611
CF-P-6-G1/4-A4	9910485	612
CF-P-6-N1/4-A4	9910486	612
CM-R10	6900416	592
D10AFP	3072808	277
D10AFPG	3072810	277
D10AFPGQ	3072811	277
D10AFPGY	3073124	277
D10AFPGYQ	3073125	277
D10AFPQ	3072809	277
D10AFPY	3073121	277
D10AFPYQ	3073122	277
D10BFP	3072613	277
D10BFPG	3072616	277
D10BFPGQ	3072617	277
D10BFPQ	3072614	277
D10DNFP	3062379	278
D10DNFPG	3064561	278
D10DNFPGQ	3064562	278
D10DNFPQ	3062380	278
D10DPFP	3062382	278
D10DPFPG	3064564	278
D10DPFPGQ	3064565	278
D10DPFPQ	3062383	278
D10INFP	3062385	278
D10INFPG	3064567	278
D10INFPGQ	3064568	278
D10INFPQ	3062386	278
D10IPFP	3062388	278
D10IPFPG	3064570	278
D10IPFPGQ	3064571	278
D10IPFPQ	3062389	278
D10UNFP	3063992	279
D10UNFPG	3064573	279
D10UNFPGQ	3064574	279
D10UNFPQ	3063993	279
D10UPFP	3063995	279
D10UPFPG	3064576	279
D10UPFPGQ	3064577	279
D10UPFPQ	3063996	279
DF-G1-NS-2M	3019350	275

Type	Ident-Nr.	Page
DF-G1-NS-Q7	3019354	275
DF-G1-PS-2M	3019355	275
DF-G1-PS-Q7	3019359	275
DM-Q12	6900367	583, 590
DMR15-6-3	6900216	583, 590
DMR20-10-4	6900214	583, 590
DMR31-15-5	6900215	583, 590
DS-Ri-QR14	1590814	589
DW10000-135-7E-H1141	1544555	537
DW10000-135-PA-H1141	1544557	537
DW1000-110-7E-H1141	1544540	537
DW1000-110-PA-H1141	1544542	537
DW15000-135-7E-H1141	1544558	537
DW15000-135-PA-H1141	1544560	537
DW20000-135-7E-H1141	1544561	537
DW20000-135-PA-H1141	1544563	537
DW2000-110-7E-H1141	1544543	537
DW2000-110-PA-H1141	1544545	537
DW250-70-7E-H1141	1544531	537
DW250-70-PA-H1141	1544533	537
DW30000-135-7E-H1141	1544567	537
DW30000-135-PA-H1141	1544569	537
DW3000-110-7E-H1141	1544546	537
DW3000-110-PA-H1141	1544548	537
DW40000-135-7E-H1141	1544603	537
DW40000-135-PA-H1141	1544605	537
DW500-70-7E-H1141	1544534	537
DW500-70-PA-H1141	1544536	537
DW6000-155-7E-H1141	1544549	537
DW6000-155-PA-H1141	1544551	537
EA5E1050Q	3075429	293
EA5E1200Q	3075430	293
EA5E1500Q	3075431	293
EA5E150Q	3075423	293
EA5E1800Q	3075432	293
EA5E2100Q	3075433	293
EA5E2400Q	3075434	293
EA5E300Q	3075424	293
EA5E450Q	3075425	293
EA5E600Q	3075426	293
EA5E750Q	3075427	293
EA5E900Q	3075428	293
EA5R1050PIXMODQ	3077533	293
EA5R1050PUXMODQ	3077544	293
EA5R1200PIXMODQ	3077534	293
EA5R1200PUXMODQ	3077545	293
EA5R1500PIXMODQ	3077535	293
EA5R1500PUXMODQ	3077546	293
EA5R150PIXMODQ	3077527	293
EA5R150PUXMODQ	3077437	293
EA5R1800PIXMODQ	3077536	293
EA5R1800PUXMODQ	3077547	293
EA5R2100PIXMODQ	3078939	293

Type	Ident-Nr.	Page
EA5R2100PUXMODQ	3078941	293
EA5R2400PIXMODQ	3078872	293
EA5R2400PUXMODQ	3078942	293
EA5R300PIXMODQ	3077528	293
EA5R300PUXMODQ	3077538	293
EA5R450PIXMODQ	3077529	293
EA5R450PUXMODQ	3077540	293
EA5R600PIXMODQ	3077530	293
EA5R600PUXMODQ	3077541	293
EA5R750PIXMODQ	3077531	293
EA5R750PUXMODQ	3077542	293
EA5R900PIXMODQ	3077532	293
EA5R900PUXMODQ	3077543	293
EF-R10	6900417	593
EM30-AP6X2-H1141/S1102	1602411	144
FB-WAK4-2/S2300	8034191	563
FB-WWAK4-2/S2300	8034194	563
FCI-34D10A4P-AP8X-H1141	6870627	353
FCI-34D10A4P-ARX-H1140	6870628	353
FCI-34D10A4P-LIX-H1141	6870624	353
FCI-D03A4-NAEX-H1141/M12	6870632	363
FCI-D03A4-NA-H1141/M12	6870635	363
FCI-D04A4P-LIX-H1141	6870641	351
FCI-D06CTP-AP8X-H1141	6870661	352
FCI-D06CTP-ARX-H1140	6870625	352
FCI-D06CTP-LIX-H1141	6870662	352
FCI-D09A4-NAEX-H1141/M16	6870634	363
FCI-D09A4-NA-H1141/M16	6870631	363
FCI-D10A4P-AP8X-H1141/A	6870646	351
FCI-D10A4P-ARX-H1140	6870644	351
FCI-D10A4P-LIX-H1141/A	6870639	351
FCI-D15A4P-AP8X-H1141	6870669	351
FCI-D20A4P-AP8X-H1141	6870672	352
FCI-TCD04A4P-AP8X-H1141	6870656	353
FCI-TCD04A4P-ARX-H1140	6870626	353
FCI-TCD04A4P-LIX-H1141	6870655	353
FCMI-10D08DYA4P-LIUP8X-H1141	6870603	383
FCMI-15D12DYA4P-LIUP8X-H1141	6870601	383
FCMI-3/4D12DYA4P-LIUP8X-H1141	6870817	384
FCS-50A4-AP8X-H1141/D014	6872025	346
FCS-50A4-NA/D014	6872009	359
FCS-68A4-AP8X-H1141/D003	6872003	345
FCS-68A4-NA/D011	6872006	360
FCS-DN25A4-NA/D100	6872017	359
FCS-G1/2A4-AN8X-H1141	6870034	343
FCS-G1/2A4-AP8X-H1141	6870004	343
FCS-G1/2A4-NAEX0	6870467	356
FCS-G1/2A4-NAEX0-H1141	6870468	356
FCS-G1/2A4-NAEX-H1141	6870322	356
FCS-G1/2A4-NA-H1141	6870303	356
FCS-G1/2A4P-AP8X/L120	6870026	347
FCS-G1/2A4P-AP8X-H1141	6870092	347
FCS-G1/2A4P-VRX/24VDC	6870096	347

Type	Ident-Nr.	Page
FCS-G1/2DY-AP8X	6870005	344
FCS-G1/2DY-AP8X-H1141	6870003	344
FCS-G1/4A4-AP8X-H1141	6870101	343
FCS-G1/4A4-ARX-H1140	6870102	343
FCS-G1/4A4-NAEX	6870315	355
FCS-G1/4A4-NAEX0	6870465	355
FCS-G1/4A4-NAEX-H1141	6870341	355
FCS-G1/4A4-NA-H1141	6870304	355
FCS-G1/4A4P-AP8X-H1141	6870082	346
FCS-G1/4T-NA	6870310	355
FCS-G3/4A4-NAEX0	6870473	356
FCS-G3/4A4-NA-H1141	6870306	356
FCS-GL1/2A2-NA/A/D100	6870380	357
FCS-GL1/2A2-NA-H1141/A	6870404	357
FCS-GL1/2A2P-AP8X-H1141/A	6870457	357
FCS-GL1/2A2P-LIX-H1141/A	6870455	357
FCS-GL1/2A4-AP8X-H1141	6870204	357
FCS-GL1/2A4-NAEX/A	6870440	357
FCS-GL1/2A4-NAEX0/A	6870349	357
FCS-GL1/2A4-NAEX0-H1141/A	6870348	357
FCS-GL1/2A4-NAEX-H1141	6870432	357
FCS-GL1/2A4-NAEX-H1141/A	6870439	357
FCS-GL1/2A4-NA-H1141	6870403	357
FCS-GL1/2A4P-AP8X-H1141	6870242	357
FCS-GL1/2A4P-VRX/230VAC	6870098	357
FCS-GL1/2T-NA	6870422	357
FCS-HA2P-LIX-H1141/AL115	6870720	348
FCS-HA2P-VRX/230VAC/AL115	6870724	348
FCS-HA2P-VRX/24VDC/AL115 6M	6870725	348
FCS-N1/2A4-AP8X-H1141	6871004	345
FCS-N1/2A4-NA	6871309	358
FCS-N1/2A4-NAEX-H1141	6871322	358
FCS-N1/2A4P-AP8X-H1141	6871032	348
FCS-N3/4A4-NA-H1141	6871304	358
FCVI-10R09DYA4P-LIUP8X-H1141	6870159	387
FI22FP	3056287	283
FI22FPQ	3056289	283
FM-IM-2UPLi63X	7525104	365
FM-IM-3UP63X	7525100	365
FM-IM-3UR38X	7525102	365
FMX-IM-2UPLi63X	7525105	365
FMX-IM-3UP63X	7525101	367
FMX-IM-3UR38X	7525103	367
FTCI-10D10A4P-2LIX-H1141	6870049	379
FTCI-10D10A4P-2UP8X-H1141	6870041	379
FTCI-10D10A4P-LIUP8X-H1141	6870042	379
FTCI-15D15A4P-2UP8X-H1141	6870043	379
FTCI-15D15A4P-LIUP8X-H1141	6870044	379
FTCI-18D15A4P-2UP8X-H1141	6870045	380
FTCI-18D15A4P-LIUP8X-H1141	6870046	380
FTCI-G1/2A4-D18/L068	6870150	615
FTCI-G1/4A4-D10/L050	6870151	615
FTCI-MP01AL	6870040	615

Type	Ident-Nr.	Page
FTCI-N1/2D15A4P-2LIX-H1140/224	6870047	351
FTCI-N3/4D19A4P-2LIX-H1140/224	6870048	380
HSA-M6-QR14	6901051	595
HSA-M8-QR14	6901052	595
IA1.53SMTA	3021056	631
IA23S	3017299	630
IAT23S	3017307	631
IAT23SM8	3022892	631
IF23S	3017317	630
IMM.442S	3020561	631
IMT.753P	3021073	632
IMT.756.6S-HT	3064398	631
IR2.53S	3017332	630
IR23S	3017336	631
IT13SM8	3022705	631
IT23S	3017355	631
IT23SM8	3017357	630
IT26S	3017360	631
ITA23S	3017967	631
IVUC-E-406	3013892	635
IVUPRBI08	3016377	297
IVUPRBI12	3016378	297
IVUPRBI16	3016379	297
IVUPRBR08	3016324	297
IVUPRBR12	3016325	297
IVUPRBR16	3016329	297
IVUPRBW08	3016409	297
IVUPRBW12	3016420	297
IVUPRBW16	3016426	297
IVUPRG608	3025128	297
IVUPRG612	3025129	297
IVUPRG616	3025130	297
IVUPRG908	3025136	297
IVUPRG912	3025137	297
IVUPRG916	3025138	297
IVUPRGB08	3016257	297
IVUPRGB12	3016258	297
IVUPRGB16	3016259	297
IVUPRGG08	3016263	297
IVUPRGG12	3016264	297
IVUPRGG16	3016265	297
IVUPRGI08	3016269	297
IVUPRGI12	3016270	297
IVUPRGI16	3016271	297
IVUPRGR08	3016251	297
IVUPRGR12	3016252	297
IVUPRGR16	3016253	297
IVUPRGW08	3016275	297
IVUPRGW12	3016284	297
IVUPRGW16	3016285	297
IVUPTBI08	3016552	297
IVUPTBI12	3016553	297
IVUPTBI16	3016563	297

Type	Ident-Nr.	Page
IVUPTBR08	3016498	297
IVUPTBR12	3016502	297
IVUPTBR16	3016505	297
IVUPTBW08	3016569	297
IVUPTBW12	3016570	297
IVUPTBW16	3016571	297
IVUPTBXC	3018396	297
IVUPTG608	3025103	297
IVUPTG612	3025104	297
IVUPTG616	3025105	297
IVUPTG908	3025110	297
IVUPTG912	3025111	297
IVUPTG916	3025112	297
IVUPTGB08	3016450	297
IVUPTGB12	3016451	297
IVUPTGB16	3016452	297
IVUPTGG08	3016456	297
IVUPTGG12	3016458	297
IVUPTGG16	3016461	297
IVUPTGI08	3016466	297
IVUPTGI12	3016467	297
IVUPTGI16	3016468	297
IVUPTGR08	3016439	297
IVUPTGR12	3016440	297
IVUPTGR16	3016444	297
IVUPTGW08	3016472	297
IVUPTGW12	3016473	297
IVUPTGW16	3016474	297
IVUPTGXC	3018395	297
IVURBPI06	3012233	295
IVURBPI08	3012234	295
IVURBPI12	3012235	295
IVURBPR08	3012221	295
IVURBPR12	3012222	295
IVURBPR16	3012223	295
IVURBPW08	3012246	295
IVURBPW12	3012247	295
IVURBPW16	3012248	295
IVURD-MXK-806	3012435	635
IVURGP608	3095556	295
IVURGP612	3095557	295
IVURGP616	3095558	295
IVURGP906	3095567	295
IVURGP908	3095568	295
IVURGP912	3095569	295
IVURGPB08	3082253	295
IVURGPB12	3082254	295
IVURGPB16	3082255	295
IVURGPG08	3082338	295
IVURGPG12	3082339	295
IVURGPG16	3082340	295
IVURGPI08	3082350	295
IVURGPI12	3082351	295

Type	Ident-Nr.	Page
IVURGPI16	3082352	295
IVURGPR08	3082181	295
IVURGPR12	3082182	295
IVURGPR16	3082183	295
IVURGPW08	3082362	295
IVURGPW12	3082363	295
IVURGPW16	3082364	295
IVUSLC50-P	3018399	636
IVUSLC75-P	3018400	636
IVUTBPI08	3084844	295
IVUTBPI12	3084845	295
IVUTBPI16	3084846	295
IVUTBPR08	3084808	295
IVUTBPR12	3084809	295
IVUTBPR16	3084810	295
IVUTBPW08	3084856	295
IVUTBPW12	3084857	295
IVUTBPW16	3084858	295
IVUTBPXC	3018390	295
IVUTGP608	3095508	295
IVUTGP612	3095509	295
IVUTGP616	3095510	295
IVUTGP906	3095519	295
IVUTGP908	3095520	295
IVUTGP912	3095521	295
IVUTGPB08	3081948	295
IVUTGPB12	3081949	295
IVUTGPB16	3081950	295
IVUTGPG08	3081956	295
IVUTGPG12	3081957	295
IVUTGPG16	3081958	295
IVUTGPI08	3081964	295
IVUTGPI12	3081965	295
IVUTGPI16	3081966	295
IVUTGPR08	3081940	295
IVUTGPR12	3081941	295
IVUTGPR16	3081942	295
IVUTGPW08	3010354	295
IVUTGPW12	3010355	295
IVUTGPW16	3010356	295
IVUTGPXC	3018388	295
JS 025/037	69429	573
K30LGRXPQ	3078800	545
K30LGRYP	3078926	545
K30LGRYPQ	3078925	545
K30LGXXPQ	3078934	545
K30LXRXPQ	3078935	545
K50APFF100GRCQ	3076229	287
K50APFF100GREQ	3076080	287
K50APFF100GREQP	3075376	287
K50APFF100GXDQ	3075979	287
K50APFF100GYCQ	3078600	287
K50APFF50GRCQ	3076223	287

Type	Ident-Nr.	Page
K50APFF50GREQP	3076236	287
K50APFF50GXDQ	3076216	287
K50APFF50GXDQP	3076191	287
K50APLPGRCQ	3076280	287
K50APLPGREQ	3076284	287
K50APLPGREQP	3075439	287
K50APLPGXDQ	3076277	287
K50APLPGXDQP	3076010	287
K50BCLGRXPQ	3018346	546
K50BCLXGXPQ	3018336	546
K50BCLXRXP	3018341	546
K50BCLXRXPQ	3018337	546
K50LGRXPQ	3076352	545
K50LGRYP	3076118	287
K50LGRYPQ	3075671	545
K50LGXXP	3077956	287
K50LGXXPQ	3075983	545
K50LRXXP	3077958	287
K50LXRXPQ	3078641	545
K50RPFF100GXDQP	3076008	287
KLDT-UNT2	6913351	583, 585
KLDT-UNT3	6913352	584, 585
KLDT-UNT4	6913353	584, 585
KLDT-UNT5	6913354	584, 585
KLDT-UNT6	6913355	584, 585
KLF 1	6970401	586
KLF 2	6970402	586
KLI 1	69710	586
KLI 3	69712	587
KLI 5	6971802	586
KLI 5Z	6971803	586
KLI 6	6971805	587
KLI 6Z	6971806	586
KLN 3	6970504	586
KLN-SMC	6970503	586
KLRC-UNT1	6970626	583
KLRC-UNT2	6970627	583
KLRC-UNT3	6970628	583
KLZ1-INT	6970410	584
KLZ2-INT	6970411	584
KLZ3-INT	6970412	584
KLZ5-INT	6970413	584
L10M8	3036147	632
L16FALM8	3036149	632
L16FM8	3036148	632
L16FSSM8	3036150	632
L2	3026343	626
L2RA	3026344	626
L4C6	3041517	626
L9M8	3036146	632
LB-R10	6900421	593
LCF04	3068884	636
LCF08	3057298	636

Type	Ident-Nr.	Page
LCF12	3057299	636
LCF16	3056522	636
LH150IX485QP	3011952	269
LH30IX485QP	3011950	269
LH80IX485QP	3011951	269
Li1000P0-Q25LM0-ELIUPN8X3-H1151	1590611	505
LI1000P0-Q25LM0-ESG25X3-H1181	1590016	504
Li1000P0-Q25LM0-HESG25X3-H1181	1590210	503
LI1000P0-Q25LM0-LIU5X3-H1151	1590008	503
LI1000P1-Q25LM1-ELIUPN8X3-H115	1590621	505
LI1000P1-Q25LM1-ESG25X3-H1181	1590359	503
LI1000P1-Q25LM1-LIU5X3-H1151	1590069	503
LI100P0-Q25LM0-ELIUPN8X3-H1151	1590017	505
LI100P0-Q25LM0-ESG25X3-H1181	1590009	503
Li100P0-Q25LM0-HESG25X3-H1181	1590201	503
LI100P0-Q25LM0-LIU5X3-H1151	1590001	503
LI100P1-Q25LM1-ELIUPN8X3-H1151	1590612	505
LI100P1-Q25LM1-ESG25X3-H1181	1590350	503
Li200P0-Q25LM0-ELIUPN8X3-H1151	1590604	505
LI200P0-Q25LM0-ESG25X3-H1181	1590010	503
Li200P0-Q25LM0-HESG25X3-H1181	1590202	503
LI200P0-Q25LM0-LIU5X3-H1151	1590002	503
LI200P1-Q25LM1-ELIUPN8X3-H1151	1590613	505
LI200P1-Q25LM1-ESG25X3-H1181	1590351	503
LI300P0-Q25LM0-ELIUPN8X3-H1151	1590018	505
LI300P0-Q25LM0-ESG25X3-H1181	1590011	503
Li300P0-Q25LM0-HESG25X3-H1181	1590203	503
LI300P0-Q25LM0-LIU5X3-H1151	1590003	503
LI300P1-Q25LM1-ELIUPN8X3-H1151	1590614	505
LI300P1-Q25LM1-ESG25X3-H1181	1590352	503
Li400P0-Q25LM0-ELIUPN8X3-H1151	1590605	505
LI400P0-Q25LM0-ESG25X3-H1181	1590012	503
Li400P0-Q25LM0-HESG25X3-H1181	1590204	503
LI400P0-Q25LM0-LIU5X3-H1151	1590004	503
LI400P1-Q25LM1-ELIUPN8X3-H1151	1590615	505
LI400P1-Q25LM1-ESG25X3-H1181	1590353	503
Li500P0-Q25LM0-ELIUPN8X3-H1151	1590606	505
LI500P0-Q25LM0-ESG25X3-H1181	1590013	503
Li500P0-Q25LM0-HESG25X3-H1181	1590205	503
LI500P0-Q25LM0-LIU5X3-H1151	1590005	503
LI500P1-Q25LM1-ELIUPN8X3-H1151	1590616	505
LI500P1-Q25LM1-ESG25X3-H1181	1590354	503
Li600P0-Q25LM0-ELIUPN8X3-H1151	1590607	505
LI600P0-Q25LM0-ESG25X3-H1181	1590014	503
Li600P0-Q25LM0-HESG25X3-H1181	1590206	503
LI600P0-Q25LM0-LIU5X3-H1151	1590006	503
LI600P1-Q25LM1-ELIUPN8X3-H1151	1590617	505
LI600P1-Q25LM1-ESG25X3-H1181	1590355	503
Li700P0-Q25LM0-ELIUPN8X3-H1151	1590608	505
LI700P0-Q25LM0-ESG25X3-H1181	1590602	504
Li700P0-Q25LM0-HESG25X3-H1181	1590207	503
LI700P0-Q25LM0-LIU5X3-H1151	1590600	503
LI700P1-Q25LM1-ELIUPN8X3-H1151	1590618	505

Type	Ident-Nr.	Page
Li800P0-Q25LM0-ELIUPN8X3-H1151	1590609	505
LI800P0-Q25LM0-ESG25X3-H1181	1590015	504
Li800P0-Q25LM0-HESG25X3-H1181	1590208	503
LI800P0-Q25LM0-LIU5X3-H1151	1590007	503
LI800P1-Q25LM1-ELIUPN8X3-H1151	1590619	505
LI800P1-Q25LM1-ESG25X3-H1181	1590357	503
Li900P0-Q25LM0-ELIUPN8X3-H1151	1590610	505
LI900P0-Q25LM0-ESG25X3-H1181	1590603	504
Li900P0-Q25LM0-HESG25X3-H1181	1590209	503
LI900P0-Q25LM0-LIU5X3-H1151	1590601	503
LI900P1-Q25LM1-ELIUPN8X3-H1151	1590620	505
LSPM-AL-R10	6900414	592
LSPM-SS-R10	6900415	592
LT3BD	3065517	267
LT3BDLV	3067380	267
LT3BDLVQ	3067381	267
LT3BDQ	3065516	267
LT3PI	3065514	267
LT3PILV	3067279	267
LT3PILVQ	3067280	267
LT3PIQ	3065513	267
LT3PU	3065508	267
LT3PULV	3067273	267
LT3PULVQ	3067274	267
LT3PUQ	3065507	267
LT7PIDQ	3073439	267
LT7PLVQ	3073440	267
LTX1000M-R10-Li0-X3-H1151	1540031	513
LTX1000M-R10-LU0-X3-H1151	1543042	513
LTX1000M-R10-SSi-2-GAF1-X3-H1161	1543046	513
LTX100M-R10-Li0-X3-H1151	1540015	513
LTX100M-R10-LU0-X3-H1151	1540017	513
LTX1500M-R10-Li0-X3-H1151	1540024	513
LTX1500M-R10-LU0-X3-H1151	1543043	513
LTX1500M-R10-SSi-2-GAF1-X3-H1161	1543047	513
LTX2000M-R10-Li0-X3-H1151	1543039	513
LTX2000M-R10-LU0-X3-H1151	1543044	513
LTX2000M-R10-SSi-2-GAF1-X3-H1161	1543048	513
LTX200M-R10-SSI-2-GAF1-X3-H1161	1543024	513
LTX250M-R10-Li0-X3-H1151	1540022	513
LTX250M-R10-LU0-X3-H1151	1543040	513
LTX500M-R10-Li0-X3-H1151	1540025	513
LTX500M-R10-LU0-X3-H1151	1543041	513
LTX500M-R10-SSi-2-GAF1-X3-H1161	1543045	513
LX12E	3002682	291
LX12EQ	3002685	291
LX12R	3002688	291
LX12RQ	3002691	291
LX15E	3071795	291
LX15EQ	3071796	291
LX15R	3071810	291
LX15RQ	3071811	291
LX18E	3071797	291

Type	Ident-Nr.	Page
LX18EQ	3071798	291
LX18R	3071812	291
LX18RQ	3071813	291
LX21E	3071799	291
LX21EQ	3071800	291
LX21R	3071814	291
LX21RQ	3071815	291
LX24E	3071801	291
LX24EQ	3071802	291
LX24R	3071816	291
LX24RQ	3071817	291
LX3E	3002658	291
LX3EQ	3002661	291
LX3R	3002664	291
LX3RQ	3002667	291
LX6E	3002670	291
LX6EQ	3002673	291
LX6R	3002676	291
LX6RQ	3002679	291
LX9E	3071794	291
LX9EQ	3071667	291
LX9R	3071809	291
LX9RQ	3071668	291
M12E	3077202	233
M12EQ8	3077203	39
M12ND	3077180	39
M12NDQ8	3077181	39
M12NFF25	3077192	39
M12NFF25Q8	3077193	39
M12NFF50	3077196	39
M12NFF50Q8	3077197	39
M12NFF75	3078230	39
M12NFF75Q8	3078231	39
M12NLP	3077184	39
M12NLPQ8	3077185	39
M12NLV	3077188	39
M12NLVQ8	3077189	39
M12NR	3077200	39
M12NRQ8	3077201	39
M12PD	3077178	233
M12PDQ8	3077179	39
M12PFF25	3077190	233
M12PFF25Q8	3077191	39
M12PFF50	3077194	233
M12PFF50Q8	3077195	39
M12PFF75	3078228	233
M12PFF75Q8	3078229	39
M12PLP	3077182	233
M12PLPQ8	3077183	39
M12PLV	3077186	233
M12PLVQ8	3077187	39
M12PR	3077198	233
M12PRQ8	3077199	39

Type	Ident-Nr.	Page
M186E	3048346	39
M186EQ	3048347	241
M18SN6D	3048660	39
M18SN6DL	3048664	39
M18SN6DLQ	3048665	39
M18SN6DQ	3048661	39
M18SN6FF100	3048672	39
M18SN6FF100Q	3048673	39
M18SN6FF25	3058428	39
M18SN6FF25Q	3058432	39
M18SN6FF50	3048668	39
M18SN6FF50Q	3048669	39
M18SN6L	3048652	39
M18SN6LP	3048656	39
M18SN6LPQ	3048657	39
M18SN6LQ	3048653	39
M18SN6R	3048348	39
M18SN6RQ	3048349	39
M18SP6D	3048662	39
M18SP6DL	3048666	39
M18SP6DLQ	3048667	242
M18SP6DQ	3048663	241
M18SP6FF100	3048674	39
M18SP6FF100Q	3048675	241
M18SP6FF25	3058429	39
M18SP6FF25Q	3058433	241
M18SP6FF50	3048670	39
M18SP6FF50Q	3048671	241
M18SP6L	3048654	39
M18SP6LP	3048658	39
M18SP6LPQ	3048659	241
M18SP6LQ	3048655	241
M18SP6R	3048350	39
M18SP6RQ	3048651	241
M18TB14	3073651	479
M18TB14Q	3073652	479
M18TB6E	3073648	479
M18TB6EQ	3073649	479
M18TB8	3073645	479
M18TB8Q	3073646	479
M18TIP14	3081127	479
M18TIP14Q	3076327	479
M18TIP6E	3081126	479
M18TIP6EQ	3078465	479
M18TIP8	3081125	479
M18TIP8Q	3081128	479
M18TUP14	3074921	479
M18TUP14Q	3074923	479
M18TUP6E	3074918	479
M18TUP6EQ	3074920	479
M18TUP8	3074915	479
M18TUP8Q	3074916	479
M1-Q25L	6901045	589, 591

Type	Ident-Nr.	Page
M2-Q25L	6901046	589, 591
M4-Q25L	6901048	589, 591
MB1-Q25	6901026	591
MB2.1-Q25	6901027	591
MB2.2-Q25	6901028	591
MB-R10	6900419	593
MBS40	69477	571
MBS65	69478	571
MF-CK40-1S	6900481	575
MF-CK40-2S	6900482	575
MF-CK40-3S	6900483	575
MF-R10	6900418	593
MI9E	3040141	271
MI9EQ	3040143	271
MIAD9CV	3037713	271
MIAD9CV2	3037712	271
MIAD9CV2Q	3035235	271
MIAD9CVQ	3035234	271
MIAD9D	3037714	271
MIAD9DQ	3034625	271
MIAD9F	3037715	271
MIAD9FQ	3034626	271
MIAD9LV	3037717	271
MIAD9LVAG	3037716	271
MIAD9LVAGQ	3037294	271
MIAD9LVQ	3034474	271
MIAD9R	3040144	271
MIAD9RQ	3040146	271
MIAD9W	3037718	271
MIAD9WQ	3035233	271
MN-M4-Q25	6901025	589, 591
MQDC2S-1206	3011420	635
MQDC2S-806	3070975	635
MW 47	69452	565
MW-08	6945008	565
MW-12	6945003	565
MW-18	6945004	565
MW-30	6945005	565
MW-Q08/Q10	6945007	565
MW-Q14/Q20	6945006	565
NC20-KT34-VN4X2	2550100	183
NC20-KT34-VP4X2	2550300	183
NC50-CP80-FZ3X2	2310600	172
NC50-CP80-VN4X2	2580102	172
NC50-CP80-VP4X2	2580202	172
NC50-CP80-VP4X2-H1141	2580400	172
NI100-Q160-AP44X/S120	1440012	140
NI100R-S32XL-2LU-H1141/S950	1534610	118
NI100R-S32XL-VP44X-H1141	1510301	106
NI100U-K90SR-VN4X2	1515503	23
NI100U-K90SR-VN4X2-H1141	1515510	23
NI100U-K90SR-VP4X2	1625834	23, 75
NI100U-K90SR-VP4X2-H1141	1625844	23, 75

Type	Ident-Nr.	Page
NI10-EG18SK-Y1X	4012150	87
NI10-EG18-Y1X/S100 7M	4012006	137
NI10-EM18WDTC-Y1X	4012151	87, 132, 137
NI10-EM18-Y1X-H1141	1006261	86
NI10-G18K-AP6X	46705	89
NI10-G18SK-AN6X	46423	28
NI10-G18SK-AP6X	46422	89
NI10-G18SK-Y1X	40161	87
NI10-G18-Y1X	40151	87
NI10-K20-AN6X	46641	100
NI10-K20-AP6X	46640	100
NI10-K20-AZ3X	43585	100
NI10-K20SK-AN6X	46648	100
NI10-K20SK-AP6X	46646	100
NI10-K20SK-AZ3X	43591	100
NI10-M18E-LIU-H1141	1535562	123
NI10-M18-LIU	1535540	123
NI10-M18-Y1X-H1141	40153	86
NI10-P18SK-AN6X	46568	28
NI10-P18SK-AP6X	46567	89
NI10-P18SK-Y1X	40361	87
NI10-P18-Y1/S100	10317	137
NI10-P18-Y1X	40351	86
NI10-P18-Y1X/S97	4035121	132
NI10-Q25-AN6X	4652330	70
NI10-Q25-AP6X	4652225	70
NI10U-EM12EWD-VP44X-H1141	1634896	149
NI10U-EM12WD-AN6X	1634838	39
NI10U-EM12WD-AN6X-H1141	1634837	39
NI10U-EM12WD-AP6X	1634813	39, 84, 131, 136, 149
NI10U-EM12WD-AP6X-H1141	1634814	39, 85, 131, 136, 149
NI10U-EM12WD-AP6X-H1141/3GD	1634857	85
NI10U-EM12WDTC-AP6X	1634761	39, 84, 131, 136
NI10U-M12-AN6X	1634825	26
NI10U-M12-AN6X-H1141	1634826	26
NI10U-M12-AN6X-V1131	1634795	26
NI10U-M12-AP6X	1634805	26, 84
NI10U-M12-AP6X-H1141	1634806	26, 84
NI10U-M12-AP6X-V1131	1634790	26, 84
NI10U-M12E-AP6X-H1141	1634901	85
NI10U-M12E-VN44X	1634874	27
NI10U-M12E-VN44X-H1141	1634875	27
NI10U-M12E-VP44X	1634870	27, 85
NI10U-M12E-VP44X-H1141	1634871	27, 85
NI10U-M12-RP6X-H1141	1634848	26, 85
NI10U-M18M-AD4X	4405070	27, 87
NI10U-M18M-AD4X-H1144	4405069	27, 87
NI10U-MT12-AN6X-H1141	1634830	26
NI10U-MT12-AP6X-H1141	1634810	34, 84
NI10U-MT18M-AD4X-H1144	4405071	34, 87
NI10U-QP08-AN6X2	1662016	18

Type	Ident-Nr.	Page
NI10U-QP08-AN6X2-0,3-PSG3M	1662018	18
NI10U-QP08-AP6X2	1662015	18, 66
NI10U-QP08-AP6X2-0,3-PSG3M	1662017	18, 66
NI12U-EG18SK-AN6X	1645420	28
NI12U-EG18SK-AP6X	1645400	89
NI12U-EM18-AN6X	1645320	28
NI12U-EM18-AN6X-H1141	1645350	28
NI12U-EM18-AP6X	1645300	89
NI12U-EM18-AP6X-H1141	1645340	89
NI12U-G18-ADZ30X2-B1331	4281412	90
NI12U-G18-ADZ30X2-B3331	4281413	90
NI12U-M18-ADZ30X2	4282410	90
NI12U-M18-AN6X	1645120	28
NI12U-M18-AN6X-H1141	1645150	28
NI12U-M18-AP6X	1645100	89
NI12U-M18-AP6X-H1141	1645140	89
NI12U-M18E-AP6X-H1141	1645143	89
NI12U-MT18-AN6X-H1141	1645250	28
NI12U-MT18-AP6X-H1141	1645240	89
NI12U-P18SK-AN6X	1645720	28
NI12U-P18SK-AP6X	1645700	89
NI12U-S18-AN6X	1645520	28
NI12U-S18-AN6X-H1141	1645620	28
NI12U-S18-AP6X	1645500	89
NI12U-S18-AP6X-H1141	1645600	89
NI14-G18-Y1X	4015401	86
Ni14-M18-AN6X-H1141	4611410	28
Ni14-M18-AP6X-H1141	4611400	28
NI14-M18-VN6X 7M	4590609	28
NI14-M18-VN6X-H1141	4690630	28
NI14-M18-VP6X 7M	4590610	89
NI14-M18-VP6X-H1141	4590620	89
NI15-EG30SK-Y1X	4012160	91
NI15-EG30-Y1X/S100 7M	4012004	138
NI15-EM30-AP6/S907	4617412	142
NI15-EM30D-VP6X/S120	4617410	141
NI15-EM30WDTC-Y1X	4012161	91, 133, 138
NI15-EM30-Y1X-H1141	1006260	91
NI15-G30SK-AN6X	46483	29
NI15-G30SK-AP6X	46482	93
NI15-G30SK-Y1X	40221	91
NI15-G30-Y1X	40201	91
NI15-M30-AD4X	44172	91
NI15-M30-AD4X-H1141	44177	91
NI15-M30-AP6X/S120	4617210	141
NI15-M30-AZ3X	43165	94
NI15-M30-AZ3X/S120	4316506	141
NI15-M30-Y1X-H1141	40203	91
NI15-P30SK-AN6X	46598	29
NI15-P30SK-AP6X	46597	93
NI15-P30SK-Y1X	40411	91
NI15-P30SR-AN6X	16204	29
NI15-P30SR-AP6X	16117	93

Type	Ident-Nr.	Page
NI15-P30SR-FZ3X2	13421	94
NI15-P30-Y1/S100	10227	138
NI15-P30-Y1X	40401	91
NI15-P30-Y1X/S97	1022704	133
NI15-S30-AD4X	44592	91
NI15-S30-AZ3X	43555	94
NI15-S30-AZ3X/S100	13758	139
NI15U-CA25-AP6X2-H1141	1625641	70
NI15U-CA25-AP6X2-V1131	1625642	70
NI15U-EM18-AP6X-H1141	1635332	28
NI15U-EM18MWD-VP44X-H1141	1634898	150
NI15U-EM18WD-AN6X	1634836	39
NI15U-EM18WD-AN6X-H1141	1634835	39
NI15U-EM18WD-AN6X-H1141/3GD	1634860	28
NI15U-EM18WD-AP6X	1634817	39, 88, 132, 137, 150
NI15U-EM18WD-AP6X-H1141	1634818	39, 88, 132, 137, 150
NI15U-EM18WD-AP6X-H1141/3GD	1634859	88
NI15U-EM18WDTC-AP6X	1634763	39, 89, 132, 137
NI15U-M18-AN6X	1635334	28
NI15U-M18-AN6X-H1141	1635335	28
NI15U-M18-AP6X	1635330	28, 89
NI15U-M18-AP6X-H1141	1635331	28, 88
NI15U-M18M-VN44X	1634882	28
NI15U-M18M-VN44X-H1141	1634883	28
NI15U-M18M-VP44X	1634878	28, 89
NI15U-M18M-VP44X-H1141	1634879	28, 89
NI15U-M18-RP6X-H1141	1635450	28, 88
NI15U-M30-AD4X	4405076	29, 91
NI15U-M30-AD4X-H1144	4405075	29, 91
NI15U-MT18-AN6X-H1141	1635337	28
NI15U-MT18-AP6X-H1141	1635333	35, 88
NI15U-MT30-AD4X-H1144	4405077	35, 91
NI20-CK40-AD4X-H1141	44652	72
NI20-CK40-AN6X2-H1141	16253	21
NI20-CK40-AP6X2-H1141	16252	72
NI20-CK40-Y1X-H1141	4065200	72
NI20-CP40-AD4X	44661	73
NI20-CP40-AN6X2	16224	22
NI20-CP40-AP6X2	16024	73
NI20-CP40-FZ3X2	13401	73
NI20-CP40-FZ3X2/S100	13441	134
NI20-CP40-FZ3X2/S97	1340123	130
NI20-CP40-VN4X2	15791	22
NI20-CP40-VP4X2	15691	73
NI20-CP40-VP4X2/S100	15046	134
NI20-CP40-VP4X2/S97	1569101	130
NI20-CP40-Y1X	10111	73
NI20-CP40-Y1X/S100	1011121	134
NI20-G30K-AD4X	4417220	91
NI20-K34SR-VP4X2	1565601	100
NI20-K34-VP4X	1565602	100

Type	Ident-Nr.	Page
NI20-K40SR-FZ3X2	13424	101
NI20-K40SR-VN4X2	15756	101
NI20-K40SR-VP4X2	15656	101
NI20-M30-AD4X	4466135	91
NI20-M30-AD4X-H1141	4466141	91
NI20-M30-AN6X-H1141	4670515	29
NI20-M30-AP6X-H1141	4670510	93
NI20-M30-VN6X 7M	4590613	30
NI20-M30-VN6X-H1141	4590614	30
NI20-M30-VP6X 7M	4590611	93
NI20-M30-VP6X-H1141	4590612	93
NI20NF-CP40-VN4X2	15784	153
NI20NF-CP40-VP4X2	15684	153
NI20-Q14-AN6X2	4690220	68
NI20-Q14-AN6X2-V1131	4690221	68
NI20-Q14-AP6X2	4690205	68
NI20-Q14-AP6X2-V1131	4690210	68
NI20R-S32SR-VP44X	1440001	106
NI20U-EG30SK-AN6X	1646420	29
NI20U-EG30SK-AP6X	1646400	93
NI20U-EM30-AN6X	1646320	29
NI20U-EM30-AN6X-H1141	1646350	29
NI20U-EM30-AP6X	1646300	93
NI20U-EM30-AP6X-H1141	1646340	92
NI20U-G30-ADZ30X2-B1131	4281812	94
NI20U-G30-ADZ30X2-B3131	4281813	94
NI20U-M30-ADZ30X2	4282810	94
NI20U-M30-AN6X	1646120	29
NI20U-M30-AN6X-H1141	1646150	29
NI20U-M30-AP6X	1646100	93
NI20U-M30-AP6X-H1141	1646140	92
NI20U-MT30-AN6X-H1141	1646250	29
NI20U-MT30-AP6X-H1141	1646240	93
NI20U-P30SK-AN6X	1646720	29
NI20U-P30SK-AP6X	1646700	93
NI20U-S30-AN6X	1646520	29
NI20U-S30-AN6X-H1141	1646620	29
NI20U-S30-AP6X	1646500	93
NI20U-S30-AP6X-H1141	1646600	92
NI20U-TS12-AN6X2-V1131	1625822	103
NI20U-TS12-AP6X2-V1131	1646640	103
NI25-CK40-LIU-H1141	1537802	121
NI25-CP40-LIU	1535544	121
NI25-CQ40/S1102 5M	1602410	143
NI25-G47-AN4X	15746	94
NI25-G47-AP4X	15646	95
NI25-G47-AZ3X	13089	95
NI25-Q20-AN6X2	1602800	69
NI25-Q20-AN6X2-H1141	1602802	69
NI25-Q20-AP6X2	1602700	69
NI25-Q20-AP6X2-H1141	1602702	69
NI25U-CK40-AP6X2-H1141	1625700	72
NI25U-CK40-VP4X2-H1141	1568803	72

Type	Ident-Nr.	Page
NI2-Q6,5-AP6/S34	1650023	64
NI2-Q9,5-AP6/S34	1650077	66
NI3,5-Q5,5-AN6X	4613610	63
NI3,5-Q5,5-AP6X	4613601	63
NI30-K40SR-FZ3X2	13425	101
NI30-K40SR-VN4X2	15758	101
NI30-K40SR-VP4X2	15658	101
NI30-Q130-ADZ30X2	42095	76
NI30-Q130-ADZ30X2-B1131	42100	76
NI30-Q130-VN4X2	15178	76
NI30-Q130-VP4X2	15179	76
NI30U-EM30-AP6X-H1141	1646632	29
NI30U-EM30WD-AN6X	1634833	40
NI30U-EM30WD-AN6X-H1141	1634832	40
NI30U-EM30WD-AN6X-H1141/3GD	1634862	29
NI30U-EM30WD-AP6X	1634821	40, 133, 139, 151
NI30U-EM30WD-AP6X-H1141	1634822	40, 133, 139, 151
NI30U-EM30WD-AP6X-H1141/3GD	1634861	92
NI30U-EM30WDTC-AP6X	1634765	40, 92, 133, 139
NI30U-EM30WD-VP44X-H1141	1634904	151
NI30U-M30-AN6X	1644634	29
NI30U-M30-AN6X-H1141	1644635	29
NI30U-M30-AP6X	1646630	29, 92
NI30U-M30-AP6X-H1141	1646631	29, 92
NI30U-M30-RP6X-H1141	1646636	92
NI30U-M30-VN44X	1634890	30
NI30U-M30-VN44X-H1141	1634891	30
NI30U-M30-VP44X	1634886	30, 93
NI30U-M30-VP44X-H1141	1634887	30, 93
NI30U-MT30-AN6X-H1141	1644637	29
NI30U-MT30-AP6X-H1141	1646633	36, 92
NI35-CK40-AP6X2-H1141	1626400	72
NI35-CP40-FZ3X2	13403	73
NI35-CP40-VN4X2	15794	22
NI35-CP40-VP4X2	15694	73
NI35-CP40-VP4X2/S369-F 30M	1569425	147
NI35U-CK40-AD4X-H1144	4280232	21, 72
NI35U-CK40-ADZ30X2-B1131	4280410	72
NI35U-CK40-ADZ30X2-B3131	4280430	72
NI35U-CK40-AN6X2-H1141	1625810	21
NI35U-CK40-AP6X2-H1141	1625800	72
NI3-EG08-AN6X	4602840	25
NI3-EG08-AN6X-H1341	4602860	25
NI3-EG08-AN6X-V1131	4602850	25
NI3-EG08-AP6X	4602740	81
NI3-EG08-AP6X-H1341	4602760	81
NI3-EG08-AP6X-V1131	4602750	81
NI3-EG08K-AN6X	4669700	25
NI3-EG08K-AN6X-H1341	4669760	25
NI3-EG08K-AN6X-V1131	4669750	25
NI3-EG08K-AP6X	4669600	81

Type	Ident-Nr.	Page
NI3-EG08K-AP6X-H1341	4669660	81
NI3-EG08K-AP6X-V1131	4669650	81
NI3-EG08K-Y1	1003700	79
NI3-EG08K-Y1-H1341	1003720	79
NI3-EH6,5-AN6X	4612500	25
NI3-EH6,5-AN6X-V1131	4612520	25
NI3-EH6,5-AP6X	4612400	99
NI3-EH6,5-AP6X-V1131	4612420	99
NI3-EH6,5K-AN6X	4610300	25
NI3-EH6,5K-AN6X-V1131	4610320	25
NI3-EH6,5K-AP6X	4610200	99
NI3-EH6,5K-AP6X-V1131	4610220	99
NI3-EH6,5K-Y1	1004700	98
NI40-CP80-FZ3X2	13405	75
NI40-CP80-FZ3X2/S100	13443	134
NI40-CP80-FZ3X2/S97	1340510	130
NI40-CP80-VN4X2	15795	75
NI40-CP80-VP4X2	15695	75
NI40-CP80-VP4X2/S100	15095	134
NI40-CP80-VP4X2/S97	1569522	130
NI40-CP80-Y1	10085	75
NI40-CP80-Y1/S100	10404	134
NI40-CP80-Y1/S97	1040010	130
NI40-CQ80/S1102 5M	1602404	143
NI40-G47SR-FZ3X2	13428	95
NI40-G47SR-VN4X2	15750	94
NI40-G47SR-VP4X2	15650	95
NI40R-S32SR-VP44X	1440005	106
NI40U-CK40-AP6X2-H1141	1623641	71
NI40U-CP40-AN6X2	1623610	22
NI40U-CP40-AP6X2	1623600	72
NI40U-CP40-FDZ30X2	4280800	73
NI40U-CP40-VN4X2	1540610	22
NI40U-CP40-VP4X2	1540600	72
NI40U-CP40-VP4X2-H1141	1540602	72
NI4-DSC26-2AP6X2	1650096	113
NI4-DSC26-2AP6X2-H1141	1650087	113
NI4-DSC26-2Y1X2	1051000	113
NI4-DSC26-2Y1X2-H1140	1051001	113
NI4-DSU35-2ADZ30X2	4290000	113
NI4-DSU35-2AP4X2	1569900	113
NI4-DSU35-2AP4X2-H1141	1569901	113
NI4-DSU35-2ASIX4-H1140	1902000	114
NI4-DSU35-2DNETX5-H1150	1569908	114
NI4-DSU35-2Y1X2	1051002	113
NI4-DSU35-2Y1X2-H1140	1051003	113
NI4-DSU35TC-2AD4X2	4430130	113
NI4-DSU35TC-2ADZ30X2	4290002	113
NI4-DSU35TC-2AP4X2	1569902	113
NI4-DSU35TC-2AP4X2/3GD	1569911	113
NI4-DSU35TC-2Y1X2	1051004	113
NI4-DSU35TC-2Y1X2/S933	1051011	113
NI4-DSU35TC-2Y1X2/S97	1051017	113

Type	Ident-Nr.	Page
NI4-EG08-AG41X	4561000	80
NI4-EM12D-AP6/S120	1633110	140
NI4-EM12WD-AP6/S929	1633111	129
NI4-M12-AD4X	44052	83
NI4-M12-AD4X-H1141	44067	83
NI4-M12-AZ31X	13032	86
NI4-Q12-AZ31X	13102	68
NI4-S12-AD4X	44532	83
NI4-S12-AZ31X	13022	86
NI4-S12-AZ31X/S100	1302201	136
NI4U-EG08-AN6X	4600610	25
NI4U-EG08-AN6X-H1341	4600650	25
NI4U-EG08-AN6X-V1131	4600630	25
NI4U-EG08-AP6X	4600600	81
NI4U-EG08-AP6X-H1341	4600640	81
NI4U-EG08-AP6X-V1131	4600620	81
NI4U-Q8SE-AN6X	4635809	17
NI4U-Q8SE-AN6X-V1131	4635810	17
NI4U-Q8SE-AP6X	4635807	65
NI4U-Q8SE-AP6X-V1131	4635808	17, 65
NI4U-Q8SE-RP6X-V1131	4635820	17
NI50-CP80-FZ3X2	13406	75
NI50-CP80-VN4X2	15796	75
NI50-CP80-VP4X2	15696	75
NI50-K90SR-Y1	10074	76
NI50-Q80-LIU-H1141	1535545	122
NI50U-CK40-AN6X2-H1141	1625823	21
NI50U-CK40-AP6X2-H1141	1625837	21, 71
NI50U-CK40-VN4X2-H1141	1625806	21
NI50U-CK40-VP4X2-H1141	1538302	21, 71
NI50U-CP40-AN6X2	1625846	22
NI50U-CP40-AP6X2	1625831	22, 72
NI50U-CP40-AP6X2-H1141	1625835	72
NI50U-CP40-VN4X2	1625847	22
NI50U-CP40-VP4X2	1538303	22, 72
Ni50U-Q42FWD-VP6X-H1141	1538305	490
Ni50U-Q42TWD-VP6X-H1141	1538306	490
NI50U-QV40-AP6X2-H1141	1625853	21, 73
NI5-EG12SK-Y1X	4012140	82
NI5-EG12-Y1X/S100 7M	4012008	135
NI5-EM12WDTC-Y1X	4012141	82, 131, 135
NI5-EM12-Y1X-H1141	4010301	82
NI5-G12K-AN6X	46713	26
NI5-G12K-AP6X	46703	85
NI5-G12SK-AN6X	46363	26
NI5-G12SK-AP6X	46362	85
NI5-G12SK-Y1X	40111	82
NI5-G12-Y1X	40101	82
NI5-K11-AP6X	46611	99
NI5-K11SK-AP6X	46617	99
NI5-K11-Y1	10071	99
NI5-M12-LIU	1535536	123
NI5-M12-LIU-H1141	1535535	123

Type	Ident-Nr.	Page
NI5-M12-Y1X-H1141	40103	82
NI5-P12SK-AN6X	46538	26
NI5-P12SK-AP6X	46537	85
NI5-P12SK-Y1X	40311	82
NI5-P12-Y1/S100	10242	135
NI5-P12-Y1X	40301	82
NI5-P12-Y1X/S97	1009402	131
NI5-Q18-AN6X	4614607	69
NI5-Q18-AP6X	4614606	69
NI5U-M12E-AD4X	4405064	26, 83
NI5U-M12E-AD4X-H1144	4405063	26, 83
NI5U-MT12E-AD4X-H1144	4405065	83
NI5U-Q10S-AN6X	1609365	18
NI5U-Q10S-AN6X-0,3-PSG3M	1609367	18
NI5U-Q10S-AP6X	1609364	18, 67
NI5U-Q10S-AP6X-0,3-PSG3M	1609366	18, 67
NI60-K90SR-FZ3X2	13429	76
NI60-K90SR-VN4X2	15740	23
NI60-K90SR-VP4X2	15640	75
NI60-Q80-Y1X	1008700	23
NI65R-S32SR-VP44X	1440008	106
NI6U-EG08-AN6X	4635803	25
NI6U-EG08-AN6X-H1341	4635805	25
NI6U-EG08-AN6X-V1131	4635804	25
NI6U-EG08-AP6X	4635800	25, 81
NI6U-EG08-AP6X-H1341	4635802	25, 81
NI6U-EG08-AP6X-V1131	4635801	25, 81
NI6U-EG08-RP6X-H1341	4635830	25, 81
NI6U-EG08-RP6X-V1131	4635831	25, 81
Ni6U-EGT08-AP6X-H1341	4635811	25
NI6U-EH6,5-AN6X	4631520	25
NI6U-EH6,5-AN6X-V1131	4631530	25
NI6U-EH6,5-AP6X	4631500	25, 99
NI6U-EH6,5-AP6X-V1131	4631510	25, 98
NI6U-EH6,5-RP6X-V1131	4635832	98
NI75U-CP80-FDZ30X2	4280900	75
NI75U-CP80-VN4X2	1540810	75
NI75U-CP80-VP4X2	1540800	75
NI75U-CP80-VP4X2-H1141	1540802	75
NI75U-Q80-AN6X2-H1141	1625856	23
NI75U-Q80-AP6X2-H1141	1625855	23
NI75U-Q80-VN4X2-H1141	1625858	23
NI75U-Q80-VP4X2-H1141	1625857	23
NI7-EM18D-VP6X/S120	4632100	141
NI7-EM18WD-AP6X/S929	4632001	129
NI8-EM18-AP6/S907	4611231	142
NI8-G12K-AD4X	4411230	83
NI8-M12-AD4X	4411235	83
NI8-M12-AD4X-H1141	4411241	83
NI8-M12-AN6X-H1141	4611315	26
NI8-M12-AP6X-H1141	4611310	85
Ni8-M12-VN6X 7M	4611326	27
Ni8-M12-VN6X-H1141	4611323	27

Type	Ident-Nr.	Page
Ni8-M12-VP6X 7M	4611327	27
Ni8-M12-VP6X-H1141	4611324	27
NI8-M18-AD4X	44112	87
NI8-M18-AD4X-H1141	44147	87
NI8-M18-AP6X/S120	4611230	141
NI8-M18-AZ3X	43105	90
NI8-M18-AZ3X/S120	4310530	141
NI8-P18-AP6/S139-S90	1650082	147
NI8-P18-AZ3/S139-S90	1350002	90, 147
NI8-P18-Y1/S139	1072501	147
NI8-S18-AD4X	44562	87
NI8-S18-AZ3X	43505	90
NI8-S18-AZ3X/S100	13718	138
NI8U-EG12SK-AN6X	1644420	26
NI8U-EG12SK-AP6X	1644400	85
NI8U-EM12-AN6X	1644320	26
NI8U-EM12-AN6X-H1141	1644350	26
NI8U-EM12-AP6X	1644300	85
NI8U-EM12-AP6X-H1141	1644340	85
NI8U-G12-ADZ32X-B3131	4281105	86
NI8U-M12-AN6X	1644120	26
NI8U-M12-AN6X-H1141	1644150	26
NI8U-M12-AP6X	1644100	85
NI8U-M12-AP6X-H1141	1644140	85
NI8U-M12EE-AP6X-H1141	1644147	85
NI8U-M12E-VN4X-H1141	1580552	27
NI8U-M12E-VP4X-H1141	1580454	85
NI8U-MT12-AN6X-H1141	1644250	26
NI8U-MT12-AP6X-H1141	1644240	85
NI8U-P12SK-AN6X	1644720	26
NI8U-P12SK-AP6X	1644700	85
NI8U-S12-AN6X	1644520	26
NI8U-S12-AN6X-H1141	1644620	26
NI8U-S12-AP6X	1644500	85
NI8U-S12-AP6X-H1141	1644600	85
P1-Li-Q25L	6901041	589
P2-Li-Q25L	6901042	589
P3-Li-Q25L	6901044	589
PBCT26U	3045091	623
PBCT46U	3035214	623
PBP16U	3039992	623
PBPS46UMT	3048005	624
PBR1X326U	3039987	623
PBT26U	3026080	624
PBT43TMB5	3070768	623
PBT46U	3025967	624
PBT46UHF	3051784	623
PBT46UHT1	3042799	623
PBT66U	3039982	623
PC001R-201-2UPN8X-H1141	6833715	435
PC001R-202-2UPN8X-H1141	6833727	425
PC001R-203-2UPN8X-H1141	6833739	426
PC001R-204-2UPN8X-H1141	6833751	435

Type	Ident-Nr.	Page
PC001V-201-2UPN8X-H1141	6833714	435
PC001V-202-2UPN8X-H1141	6833726	425
PC001V-203-2UPN8X-H1141	6833738	426
PC001V-204-2UPN8X-H1141	6833750	435
PC003V-201-2UPN8X-H1141	6833716	435
PC003V-202-2UPN8X-H1141	6833728	425
PC003V-203-2UPN8X-H1141	6833740	426
PC003V-204-2UPN8X-H1141	6833752	435
PC010V-201-2UPN8X-H1141	6833717	435
PC010V-202-2UPN8X-H1141	6833729	425
PC010V-203-2UPN8X-H1141	6833741	426
PC010V-204-2UPN8X-H1141	6833753	435
PC016V-201-2UPN8X-H1141	6833718	435
PC016V-202-2UPN8X-H1141	6833730	425
PC016V-203-2UPN8X-H1141	6833742	426
PC016V-204-2UPN8X-H1141	6833754	435
PC01VR-201-2UPN8X-H1141	6833713	435
PC01VR-202-2UPN8X-H1141	6833725	425
PC01VR-203-2UPN8X-H1141	6833737	426
PC01VR-204-2UPN8X-H1141	6833749	435
PC025V-201-2UPN8X-H1141	6833719	435
PC025V-202-2UPN8X-H1141	6833731	425
PC025V-203-2UPN8X-H1141	6833743	426
PC025V-204-2UPN8X-H1141	6833755	436
PC040V-201-2UPN8X-H1141	6833720	435
PC040V-202-2UPN8X-H1141	6833732	425
PC040V-203-2UPN8X-H1141	6833744	426
PC040V-204-2UPN8X-H1141	6833756	436
PC100R-201-2UPN8X-H1141	6833721	435
PC100R-202-2UPN8X-H1141	6833733	425
PC100R-203-2UPN8X-H1141	6833745	426
PC100R-204-2UPN8X-H1141	6833757	436
PC250R-201-2UPN8X-H1141	6833722	435
PC250R-202-2UPN8X-H1141	6833734	425
PC250R-203-2UPN8X-H1141	6833746	426
PC250R-204-2UPN8X-H1141	6833758	436
PC400R-201-2UPN8X-H1141	6833723	435
PC400R-202-2UPN8X-H1141	6833735	425
PC400R-203-2UPN8X-H1141	6833747	426
PC400R-204-2UPN8X-H1141	6833759	436
PC600R-201-2UPN8X-H1141	6833724	435
PC600R-202-2UPN8X-H1141	6833736	425
PC600R-203-2UPN8X-H1141	6833748	426
PC600R-204-2UPN8X-H1141	6833760	436
PCS-G1/4A4	6835015	601
PCV-G1/2A4	6835012	601
PCV-G1/4A4	6835011	601
PCV-G1/8A4	6835014	601
PCV-N1/2A4	6835013	601
PIA26U	3025905	625
PIAT46U	3028236	624
PIF46U	3026036	625
PIL46U	3034080	625

Type	Ident-Nr.	Page
PIR1X166U	3039152	625
PIRS1X166UMPMAL	3048066	625
PIT26U	3026079	625
PIT43TMB5	3070766	625
PIT46U	3026034	625
PIT46UHF	3051783	624
PIT46UHT1	3042804	624
PIT66U	3039899	624
PK010R-N12AL-2UP8X-V1141	6833010	417
PK010R-N14AL-2UP8X-V1141	6833012	417
PK010R-P13-2UP8X-V1141	6833005	419
PK010R-P14-2UP8X-V1141	6833007	419
PK01VR-N12AL-2UP8X-V1141	6833009	417
PK01VR-N14AL-2UP8X-V1141	6833011	417
PK01VR-P13-2UP8X-V1141	6833004	419
PK01VR-P14-2UP8X-V1141	6833006	419
PK-N-MZ-001	6835025	602
PK-N-MZ-002	6835026	602
PK-P-MZ-001	6835027	602
PK-P-MZ-002	6835028	602
PN-M12	6905309	576
PN-M18	6905310	576
PN-M30	6905308	576
PS001A-501-2UPN8X-H1141	6832636	403
PS001A-501-LI2UPN8X-H1141	6832810	404
PS001A-501-LUUPN8X-H1141	6832733	404
PS001A-503-2UPN8X-H1141	6832670	404
PS001A-503-LI2UPN8X-H1141	6832834	405
PS001A-503-LUUPN8X-H1141	6832757	405
PS001A-504-2UPN8X-H1141	6832687	405
PS001A-504-LI2UPN8X-H1141	6832846	405
PS001A-504-LUUPN8X-H1141	6832769	406
PS001A-505-2UPN8X-H1141	6832704	404
PS001A-505-LI2UPN8X-H1141	6832862	405
PS001A-505-LUUPN8X-H1141	6832786	405
PS001A-508-2UPN8X-H1141	6832721	404
PS001A-508-LI2UPN8X-H1141	6832874	405
PS001A-508-LUUPN8X-H1141	6832798	405
PS001R-301-2UPN8X-H1141	6833313	399
PS001R-301-LI2UPN8X-H1141	6833301	399
PS001R-301-LUUPN8X-H1141	6833325	400
PS001R-303-2UPN8X-H1141	6833415	400
PS001R-303-LI2UPN8X-H1141	6833403	401
PS001R-303-LUUPN8X-H1141	6833427	401
PS001R-304-2UPN8X-H1141	6833451	400
PS001R-304-LI2UPN8X-H1141	6833439	401
PS001R-304-LUUPN8X-H1141	6833463	401
PS001R-501-2UPN8X-H1141	6832625	403
PS001R-501-LI2UPN8X-H1141	6832221	403
PS001R-501-LUUPN8X-H1141	6832231	404
PS001R-503-2UPN8X-H1141	6832659	404
PS001R-503-LI2UPN8X-H1141	6832281	405
PS001R-503-LUUPN8X-H1141	6832291	405

Type	Ident-Nr.	Page
PS001R-504-2UPN8X-H1141	6832676	404
PS001R-504-LI2UPN8X-H1141	6832301	405
PS001R-504-LUUPN8X-H1141	6832311	406
PS001R-505-2UPN8X-H1141	6832693	404
PS001R-505-LI2UPN8X-H1141	6832852	405
PS001R-505-LUUPN8X-H1141	6832775	405
PS001R-508-2UPN8X-H1141	6832710	404
PS001R-508-LI2UPN8X-H1141	6832341	405
PS001R-508-LUUPN8X-H1141	6832351	405
PS001R-606-2UPN8X-H1141	6833055	409
PS001R-606-LI2UPN8X-H1141	6832381	409
PS001R-606-LUUPN8X-H1141	6832391	410
PS001V-301-2UPN8X-H1141	6833314	399
PS001V-301-LI2UPN8X-H1141	6833302	399
PS001V-301-LUUPN8X-H1141	6833326	400
PS001V-303-2UPN8X-H1141	6833416	400
PS001V-303-LI2UPN8X-H1141	6833404	401
PS001V-303-LUUPN8X-H1141	6833428	401
PS001V-304-2UPN8X-H1141	6833452	400
PS001V-304-LI2UPN8X-H1141	6833440	401
PS001V-304-LUUPN8X-H1141	6833464	401
PS001V-501-2UPN8X-H1141	6832626	403
PS001V-501-LI2UPN8X-H1141	6832803	404
PS001V-501-LUUPN8X-H1141	6832726	404
PS001V-503-2UPN8X-H1141	6832660	404
PS001V-503-LI2UPN8X-H1141	6832827	405
PS001V-503-LUUPN8X-H1141	6832750	405
PS001V-504-2UPN8X-H1141	6832677	405
PS001V-504-LI2UPN8X-H1141	6832839	405
PS001V-504-LUUPN8X-H1141	6832762	406
PS001V-505-2UPN8X-H1141	6832694	404
PS001V-505-LI2UPN8X-H1141	6832853	405
PS001V-505-LUUPN8X-H1141	6832776	405
PS001V-508-2UPN8X-H1141	6832711	404
PS001V-508-LI2UPN8X-H1141	6832867	405
PS001V-508-LUUPN8X-H1141	6832791	405
PS001V-606-2UPN8X-H1141	6833056	409
PS001V-606-LI2UPN8X-H1141	6833040	409
PS001V-606-LUUPN8X-H1141	6833027	410
PS003A-501-2UPN8X-H1141	6832637	403
PS003A-501-LI2UPN8X-H1141	6832811	404
PS003A-501-LUUPN8X-H1141	6832734	404
PS003A-503-2UPN8X-H1141	6832671	404
PS003A-503-LI2UPN8X-H1141	6832835	405
PS003A-503-LUUPN8X-H1141	6832758	405
PS003A-504-2UPN8X-H1141	6832688	405
PS003A-504-LI2UPN8X-H1141	6832847	405
PS003A-504-LUUPN8X-H1141	6832770	406
PS003A-505-2UPN8X-H1141	6832705	404
PS003A-505-LI2UPN8X-H1141	6832863	405
PS003A-505-LUUPN8X-H1141	6832787	405
PS003A-508-2UPN8X-H1141	6832722	404
PS003A-508-LI2UPN8X-H1141	6832875	405

Type	Ident-Nr.	Page
PS003A-508-LUUPN8X-H1141	6832799	405
PS003V-301-2UPN8X-H1141	6833315	399
PS003V-301-LI2UPN8X-H1141	6833303	399
PS003V-301-LUUPN8X-H1141	6833327	400
PS003V-303-2UPN8X-H1141	6833417	400
PS003V-303-LI2UPN8X-H1141	6833405	401
PS003V-303-LUUPN8X-H1141	6833429	401
PS003V-304-2UPN8X-H1141	6833453	400
PS003V-304-LI2UPN8X-H1141	6833441	401
PS003V-304-LUUPN8X-H1141	6833465	401
PS003V-501-2UPN8X-H1141	6832627	403
PS003V-501-LI2UPN8X-H1141	6832804	404
PS003V-501-LUUPN8X-H1141	6832727	404
PS003V-503-2UPN8X-H1141	6832661	404
PS003V-503-LI2UPN8X-H1141	6832828	405
PS003V-503-LUUPN8X-H1141	6832751	405
PS003V-504-2UPN8X-H1141	6832678	405
PS003V-504-LI2UPN8X-H1141	6832840	405
PS003V-504-LUUPN8X-H1141	6832763	406
PS003V-505-2UPN8X-H1141	6832695	404
PS003V-505-LI2UPN8X-H1141	6832854	405
PS003V-505-LUUPN8X-H1141	6832777	405
PS003V-508-2UPN8X-H1141	6832712	404
PS003V-508-LI2UPN8X-H1141	6832868	405
PS003V-508-LUUPN8X-H1141	6832792	405
PS003V-606-2UPN8X-H1141	6833057	409
PS003V-606-LI2UPN8X-H1141	6833041	409
PS003V-606-LUUPN8X-H1141	6833028	410
PS010A-501-2UPN8X-H1141	6832638	403
PS010A-501-LI2UPN8X-H1141	6832812	404
PS010A-501-LUUPN8X-H1141	6832735	404
PS010A-503-2UPN8X-H1141	6832672	404
PS010A-503-LI2UPN8X-H1141	6832836	405
PS010A-503-LUUPN8X-H1141	6832759	405
PS010A-504-2UPN8X-H1141	6832689	405
PS010A-504-LI2UPN8X-H1141	6832848	405
PS010A-504-LUUPN8X-H1141	6832771	406
PS010A-505-2UPN8X-H1141	6832706	404
PS010A-505-LI2UPN8X-H1141	6832864	405
PS010A-505-LUUPN8X-H1141	6832788	405
PS010A-508-2UPN8X-H1141	6832723	404
PS010A-508-LI2UPN8X-H1141	6832876	405
PS010A-508-LUUPN8X-H1141	6832800	405
PS010V-301-2UPN8X-H1141	6833316	399
PS010V-301-LI2UPN8X-H1141	6833304	399
PS010V-301-LUUPN8X-H1141	6833328	400
PS010V-303-2UPN8X-H1141	6833418	400
PS010V-303-LI2UPN8X-H1141	6833406	401
PS010V-303-LUUPN8X-H1141	6833430	401
PS010V-304-2UPN8X-H1141	6833454	400
PS010V-304-LI2UPN8X-H1141	6833442	401
PS010V-304-LUUPN8X-H1141	6833466	401
PS010V-501-2UPN8X-H1141	6832628	403

Type	Ident-Nr.	Page
PS010V-501-LI2UPN8X-H1141	6832805	404
PS010V-501-LUUPN8X-H1141	6832728	404
PS010V-503-2UPN8X-H1141	6832662	404
PS010V-503-LI2UPN8X-H1141	6832829	405
PS010V-503-LUUPN8X-H1141	6832752	405
PS010V-504-2UPN8X-H1141	6832679	405
PS010V-504-LI2UPN8X-H1141	6832841	405
PS010V-504-LUUPN8X-H1141	6832764	406
PS010V-505-2UPN8X-H1141	6832696	404
PS010V-505-LUUPN8X-H1141	6832778	405
PS010V-508-2UPN8X-H1141	6832713	404
PS010V-508-LI2UPN8X-H1141	6832869	405
PS010V-508-LUUPN8X-H1141	6832793	405
PS010V-606-2UPN8X-H1141	6833058	409
PS010V-606-LI2UPN8X-H1141	6833042	409
PS010V-606-LUUPN8X-H1141	6833029	410
PS010V-609-2UPN8X-H1141	6833020	410
PS010V-609-LI2UPN8X-H1141	6833047	411
PS010V-609-LUUPN8X-H1141	6833033	411
PS016A-501-2UPN8X-H1141	6832639	403
PS016A-501-LI2UPN8X-H1141	6832813	404
PS016A-501-LUUPN8X-H1141	6832736	404
PS016A-503-2UPN8X-H1141	6832673	404
PS016A-503-LI2UPN8X-H1141	6832837	405
PS016A-503-LUUPN8X-H1141	6832760	405
PS016A-504-2UPN8X-H1141	6832690	405
PS016A-504-LI2UPN8X-H1141	6832849	405
PS016A-504-LUUPN8X-H1141	6832772	406
PS016A-505-2UPN8X-H1141	6832707	404
PS016A-505-LI2UPN8X-H1141	6832865	405
PS016A-505-LUUPN8X-H1141	6832789	405
PS016A-508-2UPN8X-H1141	6832724	404
PS016A-508-LI2UPN8X-H1141	6832877	405
PS016A-508-LUUPN8X-H1141	6832801	405
PS016V-301-2UPN8X-H1141	6833317	399
PS016V-301-LI2UPN8X-H1141	6833305	399
PS016V-301-LUUPN8X-H1141	6833329	400
PS016V-303-2UPN8X-H1141	6833419	400
PS016V-303-LI2UPN8X-H1141	6833407	401
PS016V-303-LUUPN8X-H1141	6833431	401
PS016V-304-2UPN8X-H1141	6833455	400
PS016V-304-LI2UPN8X-H1141	6833443	401
PS016V-304-LUUPN8X-H1141	6833467	401
PS016V-501-2UPN8X-H1141	6832629	403
PS016V-501-LI2UPN8X-H1141	6832806	404
PS016V-501-LUUPN8X-H1141	6832729	404
PS016V-503-2UPN8X-H1141	6832663	404
PS016V-503-LI2UPN8X-H1141	6832830	405
PS016V-503-LUUPN8X-H1141	6832753	405
PS016V-504-2UPN8X-H1141	6832680	405
PS016V-504-LI2UPN8X-H1141	6832842	405
PS016V-504-LUUPN8X-H1141	6832765	406
PS016V-505-2UPN8X-H1141	6832697	404

Type	Ident-Nr.	Page
PS016V-505-LI2UPN8X-H1141	6832855	405
PS016V-505-LUUPN8X-H1141	6832779	405
PS016V-508-2UPN8X-H1141	6832714	404
PS016V-508-LI2UPN8X-H1141	6832870	405
PS016V-508-LUUPN8X-H1141	6832794	405
PS016V-606-2UPN8X-H1141	6833059	409
PS016V-606-LI2UPN8X-H1141	6833043	409
PS016V-606-LUUPN8X-H1141	6833030	410
PS016V-609-2UPN8X-H1141	6833021	410
PS016V-609-LI2UPN8X-H1141	6833048	411
PS016V-609-LUUPN8X-H1141	6833034	411
PS01VR-301-2UPN8X-H1141	6833312	399
PS01VR-301-LI2UPN8X-H1141	6833300	399
PS01VR-301-LUUPN8X-H1141	6833324	400
PS01VR-303-2UPN8X-H1141	6833414	400
PS01VR-303-LI2UPN8X-H1141	6833402	401
PS01VR-303-LUUPN8X-H1141	6833426	401
PS01VR-304-2UPN8X-H1141	6833450	400
PS01VR-304-LI2UPN8X-H1141	6833438	401
PS01VR-304-LUUPN8X-H1141	6833462	401
PS01VR-501-2UPN8X-H1141	6832624	403
PS01VR-501-LI2UPN8X-H1141	6832220	403
PS01VR-501-LUUPN8X-H1141	6832230	404
PS01VR-503-2UPN8X-H1141	6832658	404
PS01VR-503-LI2UPN8X-H1141	6832280	405
PS01VR-503-LUUPN8X-H1141	6832290	405
PS01VR-504-2UPN8X-H1141	6832675	404
PS01VR-504-LI2UPN8X-H1141	6832300	405
PS01VR-504-LUUPN8X-H1141	6832310	406
PS01VR-505-2UPN8X-H1141	6832692	404
PS01VR-505-LI2UPN8X-H1141	6832851	405
PS01VR-505-LUUPN8X-H1141	6832774	405
PS01VR-508-2UPN8X-H1141	6832709	404
PS01VR-508-LI2UPN8X-H1141	6832340	405
PS01VR-508-LUUPN8X-H1141	6832350	405
PS01VR-606-2UPN8X-H1141	6833054	409
PS01VR-606-LI2UPN8X-H1141	6832380	409
PS01VR-606-LUUPN8X-H1141	6832390	410
PS025A-501-2UPN8X-H1141	6832640	403
PS025A-501-LI2UPN8X-H1141	6832814	404
PS025A-501-LUUPN8X-H1141	6832737	404
PS025A-503-2UPN8X-H1141	6832674	404
PS025A-503-LI2UPN8X-H1141	6832838	405
PS025A-503-LUUPN8X-H1141	6832761	405
PS025A-504-2UPN8X-H1141	6832691	405
PS025A-504-LI2UPN8X-H1141	6832850	406
PS025A-504-LUUPN8X-H1141	6832773	406
PS025A-505-2UPN8X-H1141	6832708	404
PS025A-505-LI2UPN8X-H1141	6832866	405
PS025A-505-LUUPN8X-H1141	6832790	405
PS025A-508-2UPN8X-H1141	6832725	404
PS025A-508-LI2UPN8X-H1141	6832878	405
PS025A-508-LUUPN8X-H1141	6832802	405

Type	Ident-Nr.	Page
PS025V-301-2UPN8X-H1141	6833318	399
PS025V-301-LI2UPN8X-H1141	6833306	399
PS025V-301-LUUPN8X-H1141	6833330	400
PS025V-303-2UPN8X-H1141	6833420	400
PS025V-303-LI2UPN8X-H1141	6833408	401
PS025V-303-LUUPN8X-H1141	6833432	401
PS025V-304-2UPN8X-H1141	6833456	400
PS025V-304-LI2UPN8X-H1141	6833444	401
PS025V-304-LUUPN8X-H1141	6833468	401
PS025V-501-2UPN8X-H1141	6832630	403
PS025V-501-LI2UPN8X-H1141	6832807	404
PS025V-501-LUUPN8X-H1141	6832730	404
PS025V-503-2UPN8X-H1141	6832664	404
PS025V-503-LI2UPN8X-H1141	6832831	405
PS025V-503-LUUPN8X-H1141	6832754	405
PS025V-504-2UPN8X-H1141	6832681	405
PS025V-504-LI2UPN8X-H1141	6832843	405
PS025V-504-LUUPN8X-H1141	6832766	406
PS025V-505-2UPN8X-H1141	6832698	404
PS025V-505-LI2UPN8X-H1141	6832856	405
PS025V-505-LUUPN8X-H1141	6832780	405
PS025V-508-2UPN8X-H1141	6832715	404
PS025V-508-LI2UPN8X-H1141	6832871	405
PS025V-508-LUUPN8X-H1141	6832795	405
PS025V-606-2UPN8X-H1141	6833060	409
PS025V-606-LI2UPN8X-H1141	6833044	409
PS025V-606-LUUPN8X-H1141	6833031	410
PS025V-609-2UPN8X-H1141	6833022	410
PS025V-609-LI2UPN8X-H1141	6833049	411
PS025V-609-LUUPN8X-H1141	6833035	411
PS040V-301-2UPN8X-H1141	6833319	399
PS040V-301-LI2UPN8X-H1141	6833307	400
PS040V-301-LUUPN8X-H1141	6833331	400
PS040V-303-2UPN8X-H1141	6833421	400
PS040V-303-LI2UPN8X-H1141	6833409	401
PS040V-303-LUUPN8X-H1141	6833433	401
PS040V-304-2UPN8X-H1141	6833457	400
PS040V-304-LI2UPN8X-H1141	6833445	401
PS040V-304-LUUPN8X-H1141	6833469	401
PS040V-501-2UPN8X-H1141	6832631	403
PS040V-501-LI2UPN8X-H1141	6832808	404
PS040V-501-LUUPN8X-H1141	6832731	404
PS040V-503-2UPN8X-H1141	6832665	404
PS040V-503-LI2UPN8X-H1141	6832832	405
PS040V-503-LUUPN8X-H1141	6832755	405
PS040V-504-2UPN8X-H1141	6832682	405
PS040V-504-LI2UPN8X-H1141	6832844	405
PS040V-504-LUUPN8X-H1141	6832767	406
PS040V-505-2UPN8X-H1141	6832699	404
PS040V-505-LI2UPN8X-H1141	6832857	405
PS040V-505-LUUPN8X-H1141	6832781	405
PS040V-508-2UPN8X-H1141	6832716	404
PS040V-508-LI2UPN8X-H1141	6832872	405

Type	Ident-Nr.	Page
PS040V-508-LUUPN8X-H1141	6832796	405
PS040V-606-2UPN8X-H1141	6833061	409
PS040V-606-LI2UPN8X-H1141	6833045	409
PS040V-606-LUUPN8X-H1141	6833032	410
PS040V-609-2UPN8X-H1141	6833023	410
PS040V-609-LI2UPN8X-H1141	6833050	411
PS040V-609-LUUPN8X-H1141	6833036	411
PS100R-301-2UPN8X-H1141	6833320	399
PS100R-301-LI2UPN8X-H1141	6833308	400
PS100R-301-LUUPN8X-H1141	6833332	400
PS100R-303-2UPN8X-H1141	6833422	400
PS100R-303-LI2UPN8X-H1141	6833410	401
PS100R-303-LUUPN8X-H1141	6833434	401
PS100R-304-2UPN8X-H1141	6833458	400
PS100R-304-LI2UPN8X-H1141	6833446	401
PS100R-304-LUUPN8X-H1141	6833500	401
PS100R-501-2UPN8X-H1141	6832632	403
PS100R-501-LI2UPN8X-H1141	6832227	404
PS100R-501-LUUPN8X-H1141	6832237	404
PS100R-503-2UPN8X-H1141	6832666	404
PS100R-503-LI2UPN8X-H1141	6832287	405
PS100R-503-LUUPN8X-H1141	6832297	405
PS100R-504-2UPN8X-H1141	6832683	405
PS100R-504-LI2UPN8X-H1141	6832307	405
PS100R-504-LUUPN8X-H1141	6832317	406
PS100R-505-2UPN8X-H1141	6832700	404
PS100R-505-LI2UPN8X-H1141	6832858	405
PS100R-505-LUUPN8X-H1141	6832782	405
PS100R-508-2UPN8X-H1141	6832717	404
PS100R-508-LI2UPN8X-H1141	6832347	405
PS100R-508-LUUPN8X-H1141	6832357	405
PS100R-606-2UPN8X-H1141	6833062	409
PS100R-606-Li2UPN8X-H1141	6832387	409
PS100R-606-LUUPN8X-H1141	6832397	410
PS100R-609-2UPN8X-H1141	6833024	410
PS100R-609-LI2UPN8X-H1141	6832446	411
PS100R-609-LUUPN8X-H1141	6833037	411
PS250R-301-2UPN8X-H1141	6833321	399
PS250R-301-LI2UPN8X-H1141	6833309	400
PS250R-301-LUUPN8X-H1141	6833333	400
PS250R-303-2UPN8X-H1141	6833423	400
PS250R-303-LI2UPN8X-H1141	6833411	401
PS250R-303-LUUPN8X-H1141	6833435	401
PS250R-304-2UPN8X-H1141	6833459	400
PS250R-304-LI2UPN8X-H1141	6833447	401
PS250R-304-LUUPN8X-H1141	6833501	401
PS250R-501-2UPN8X-H1141	6832633	403
PS250R-501-LI2UPN8X-H1141	6832228	404
PS250R-501-LUUPN8X-H1141	6832238	404
PS250R-503-2UPN8X-H1141	6832667	404
PS250R-503-LI2UPN8X-H1141	6832288	405
PS250R-503-LUUPN8X-H1141	6832298	405
PS250R-504-2UPN8X-H1141	6832684	405

Type	Ident-Nr.	Page
PS250R-504-LI2UPN8X-H1141	6832308	405
PS250R-504-LUUPN8X-H1141	6832318	406
PS250R-505-2UPN8X-H1141	6832701	404
PS250R-505-LI2UPN8X-H1141	6832859	405
PS250R-505-LUUPN8X-H1141	6832783	405
PS250R-508-2UPN8X-H1141	6832718	404
PS250R-508-LI2UPN8X-H1141	6832348	405
PS250R-508-LUUPN8X-H1141	6832358	405
PS250R-606-2UPN8X-H1141	6833063	409
PS250R-606-LI2UPN8X-H1141	6832388	410
PS250R-606-LUUPN8X-H1141	6832398	410
PS250R-609-2UPN8X-H1141	6833025	410
PS250R-609-LI2UPN8X-H1141	6833052	411
PS250R-609-LUUPN8X-H1141	6833038	411
PS400R-301-2UPN8X-H1141	6833322	399
PS400R-301-LI2UPN8X-H1141	6833310	400
PS400R-301-LUUPN8X-H1141	6833334	400
PS400R-303-2UPN8X-H1141	6833424	400
PS400R-303-LI2UPN8X-H1141	6833412	401
PS400R-303-LUUPN8X-H1141	6833436	401
PS400R-304-2UPN8X-H1141	6833460	400
PS400R-304-LI2UPN8X-H1141	6833448	401
PS400R-304-LUUPN8X-H1141	6833502	401
PS400R-501-2UPN8X-H1141	6832634	403
PS400R-501-LI2UPN8X-H1141	6832229	404
PS400R-501-LUUPN8X-H1141	6832239	404
PS400R-503-2UPN8X-H1141	6832668	404
PS400R-503-LI2UPN8X-H1141	6832289	405
PS400R-503-LUUPN8X-H1141	6832299	405
PS400R-504-2UPN8X-H1141	6832685	405
PS400R-504-LI2UPN8X-H1141	6832309	405
PS400R-504-LUUPN8X-H1141	6832319	406
PS400R-505-2UPN8X-H1141	6832702	404
PS400R-505-LI2UPN8X-H1141	6832860	405
PS400R-505-LUUPN8X-H1141	6832784	405
PS400R-508-2UPN8X-H1141	6832719	404
PS400R-508-LI2UPN8X-H1141	6832349	405
PS400R-508-LUUPN8X-H1141	6832359	405
PS400R-606-2UPN8X-H1141	6833064	409
PS400R-606-LI2UPN8X-H1141	6832389	410
PS400R-606-LUUPN8X-H1141	6832399	410
PS400R-609-2UPN8X-H1141	6833026	410
PS400R-609-LI2UPN8X-H1141	6833053	411
PS400R-609-LUUPN8X-H1141	6833039	411
PS600R-301-2UPN8X-H1141	6833323	399
PS600R-301-LI2UPN8X-H1141	6833311	400
PS600R-301-LUUPN8X-H1141	6833335	400
PS600R-303-2UPN8X-H1141	6833425	400
PS600R-303-LI2UPN8X-H1141	6833413	401
PS600R-303-LUUPN8X-H1141	6833437	401
PS600R-304-2UPN8X-H1141	6833461	400
PS600R-304-LI2UPN8X-H1141	6833449	401
PS600R-304-LUUPN8X-H1141	6833503	401

Type	Ident-Nr.	Page
PS600R-501-2UPN8X-H1141	6832635	403
PS600R-501-LI2UPN8X-H1141	6832809	404
PS600R-501-LUUPN8X-H1141	6832732	404
PS600R-503-2UPN8X-H1141	6832669	404
PS600R-503-LI2UPN8X-H1141	6832833	405
PS600R-503-LUUPN8X-H1141	6832756	405
PS600R-504-2UPN8X-H1141	6832686	405
PS600R-504-LI2UPN8X-H1141	6832845	405
PS600R-504-LUUPN8X-H1141	6832768	406
PS600R-505-2UPN8X-H1141	6832703	404
PS600R-505-LI2UPN8X-H1141	6832861	405
PS600R-505-LUUPN8X-H1141	6832785	405
PS600R-508-2UPN8X-H1141	6832720	404
PS600R-508-LI2UPN8X-H1141	6832873	405
PS600R-508-LUUPN8X-H1141	6832797	405
PT001R-11-LI3-H1131	6831434	425
PT001R-11-LU2-H1131	6831483	425
PT001R-13-LU2-H1131	6831513	427
PT001R-14-LI3-H1131	6831401	426
PT001R-14-LU2-H1131	6831417	427
PT002R-11-LI3-H1131	6831435	425
PT002R-11-LU2-H1131	6831484	425
PT002R-13-LU2-H1131	6831514	427
PT002R-14-LI3-H1131	6831402	426
PT002R-14-LU2-H1131	6831418	427
PT003R-11-LI3-H1131	6831436	425
PT003R-11-LU2-H1131	6831485	425
PT003R-13-LU2-H1131	6831515	427
PT003R-14-LI3-H1131	6831403	426
PT003R-14-LU2-H1131	6831419	427
PT004R-11-LI3-H1131	6831437	425
PT004R-11-LU2-H1131	6831486	425
PT004R-13-LI3-H1131	6831498	426
PT004R-13-LU2-H1131	6831516	427
PT004R-14-LI3-H1131	6831404	426
PT004R-14-LU2-H1131	6831420	427
PT006R-11-LI3-H1131	6831438	425
PT006R-11-LU2-H1131	6831452	426
PT006R-13-LU2-H1131	6831517	427
PT006R-14-LI3-H1131	6831405	426
PT006R-14-LU2-H1131	6831421	427
PT010R-11-LI3-H1131	6831432	425
PT010R-11-LU2-H1131	6831487	426
PT010R-13-LI3-H1131	6831502	426
PT010R-13-LU2-H1131	6831496	427
PT010R-14-LI3-H1131	6831406	426
PT010R-14-LU2-H1131	6831422	427
PT010R-26-LI3-H1140	6831543	428
PT010R-29-LI3-H1140	6831554	427
PT016R-11-LI3-H1131	6831439	425
PT016R-11-LU2-H1131	6831488	426
PT016R-13-LI3-H1131	6831503	426
PT016R-14-LI3-H1131	6831407	426
PT016R-14-LU2-H1131	6831423	427

Type	Ident-Nr.	Page
PT016R-26-LI3-H1140	6831544	428
PT016R-29-LI3-H1140	6831555	427
PT01VR-11-LU2-H1131	6831454	426
PT01VR-13-LU2-H1131	6831512	427
PT01VR-14-LI3-H1131	6831400	426
PT01VR-14-LU2-H1131	6831416	427
PT025R-11-LI3-H1131	6831440	425
PT025R-11-LU2-H1131	6831489	426
PT025R-13-LI3-H1131	6831504	426
PT025R-14-LI3-H1131	6831408	426
PT025R-14-LU2-H1131	6831424	427
PT025R-26-LI3-H1140	6831545	428
PT025R-29-LI3-H1140	6831556	427
PT040R-11-LI3-H1131	6831441	425
PT040R-11-LU2-H1131	6831490	426
PT040R-13-LI3-H1131	6831505	426
PT040R-14-LI3-H1131	6831409	426
PT040R-14-LU2-H1131	6831425	427
PT040R-26-LI3-H1140	6831546	428
PT040R-29-LI3-H1140	6831557	427
PT060R-11-LI3-H1131	6831442	425
PT060R-11-LU2-H1131	6831491	426
PT060R-13-LI3-H1131	6831506	426
PT060R-13-LU2-H1131	6831522	427
PT060R-14-LI3-H1131	6831410	426
PT060R-14-LU2-H1131	6831426	427
PT060R-26-LI3-H1140	6831547	428
PT060R-29-LI3-H1140	6831558	427
PT100R-11-LI3-H1131	6831443	425
PT100R-11-LU2-H1131	6831492	426
PT100R-13-LI3-H1131	6831507	426
PT100R-13-LU2-H1131	6831523	427
PT100R-14-LI3-H1131	6831411	426
PT100R-14-LU2-H1131	6831427	427
PT100R-26-LI3-H1140	6831548	428
PT100R-29-LI3-H1140	6831559	427
PT160R-11-LI3-H1131	6831444	425
PT160R-11-LU2-H1131	6831453	426
PT160R-13-LI3-H1131	6831508	426
PT160R-13-LU2-H1131	6831524	427
PT160R-14-LI3-H1131	6831412	426
PT160R-14-LU2-H1131	6831428	427
PT160R-26-LI3-H1140	6831549	428
PT160R-29-LI3-H1140	6831560	427
PT250R-11-LI3-H1131	6831445	425
PT250R-11-LU2-H1131	6831451	426
PT250R-13-LI3-H1131	6831509	426
PT250R-13-LU2-H1131	6831525	427
PT250R-14-LI3-H1131	6831413	426
PT250R-14-LU2-H1131	6831429	427
PT250R-26-LI3-H1140	6831550	428
PT250R-29-LI3-H1140	6831561	427
PT400R-11-LI3-H1131	6831446	425

Type	Ident-Nr.	Page
PT400R-11-LU2-H1131	6831493	426
PT400R-13-LI3-H1131	6831510	426
PT400R-13-LU2-H1131	6831526	427
PT400R-14-LI3-H1131	6831414	426
PT400R-14-LU2-H1131	6831430	427
PT400R-26-LI3-H1140	6831552	428
PT400R-29-LI3-H1140	6831562	427
PT600R-11-LI3-H1131	6831447	425
PT600R-11-LU2-H1131	6831494	426
PT600R-13-LI3-H1131	6831511	426
PT600R-13-LU2-H1131	6831527	427
PT600R-14-LI3-H1131	6831415	426
PT600R-14-LU2-H1131	6831431	427
PTS-Cover	6907410	601, 612
PVA100P6	3052901	289
PVA100P6Q	3052903	289
PVA225P6	3052905	289
PVA225P6Q	3052907	289
PVA300P6	3052909	289
PVA300P6Q	3052911	289
PVA375P6	3052913	289
PVA375P6Q	3052915	289
PVD100	3070988	289
PVD100Q	3070989	289
PVD225	3070990	289
PVD225Q	3070991	289
PVL225P	3026207	289
PVL225PQ	3026206	289
Q126E	3072140	230
Q126EQ	3072141	19
Q12AB6FF15	3072104	230
Q12AB6FF15Q	3072105	19
Q12AB6FF30	3072110	230
Q12AB6FF30Q	3072111	19
Q12AB6FF50	3072116	230
Q12AB6FF50Q	3072117	19
Q12AB6LP	3072128	230
Q12AB6LPQ	3072129	19
Q12AB6LV	3072122	230
Q12AB6LVQ	3072123	19
Q12AB6R	3072134	230
Q12AB6RQ	3072135	19
Q12RB6FF15	3072107	230
Q12RB6FF15Q	3072108	19
Q12RB6FF30	3072113	230
Q12RB6FF30Q	3072114	19
Q12RB6FF50	3072119	230
Q12RB6FF50Q	3072120	19
Q12RB6LP	3072131	230
Q12RB6LPQ	3072132	19
Q12RB6LV	3072125	230
Q12RB6LVQ	3072126	19
Q12RB6R	3072137	230

Type	Ident-Nr.	Page
Q12RB6RQ	3072138	19
Q20E	3077781	69
Q20EL	3078159	69
Q20ELQ5	3078206	245
Q20EQ5	3078205	245
Q20ND	3077759	69
Q20NDL	3077755	69
Q20NDLQ5	3078188	69
Q20NDQ5	3078192	69
Q20NDXL	3078153	69
Q20NDXLQ5	3078190	69
Q20NLP	3077763	69
Q20NLPQ5	3078194	69
Q20NLV	3077767	69
Q20NLVQ5	3078196	69
Q20NR	3077779	69
Q20NRL	3078274	69
Q20PD	3077757	69
Q20PDL	3077753	69
Q20PDLQ5	3078187	245
Q20PDQ5	3078191	245
Q20PDXL	3078151	69
Q20PDXLQ5	3078189	245
Q20PFF100	3077773	69
Q20PFF100Q5	3078199	245
Q20PFF150	3078155	69
Q20PFF150Q5	3078201	245
Q20PFF50	3077769	69
Q20PFF50Q5	3078197	245
Q20PLP	3077761	69
Q20PLPQ5	3078193	245
Q20PLV	3077765	69
Q20PLVQ5	3078195	245
Q20PR	3077777	69
Q20PRL	3078272	69
Q20PRLQ5	3078280	245
Q20PRQ5	3078203	245
Q256E	3031926	243
Q256EQ	3031935	243
Q25SN6FF100	3031931	243
Q25SN6FF100Q	3031940	243
Q25SN6FF25	3058400	243
Q25SN6FF25Q	3058408	243
Q25SN6FF50	3031929	243
Q25SN6FF50Q	3031938	243
Q25SN6LP	3031924	243
Q25SN6LPQ	3031933	243
Q25SN6R	3031927	243
Q25SN6RQ	3031936	243
Q25SP6FF100	3031932	243
Q25SP6FF100Q	3031941	243
Q25SP6FF25	3058401	243
Q25SP6FF25Q	3058409	243

Type	Ident-Nr.	Page
Q25SP6FF50	3031930	243
Q25SP6FF50Q	3031939	243
Q25SP6LP	3031925	243
Q25SP6LPQ	3031934	243
Q25SP6R	3031928	243
Q25SP6RQ	3031937	243
Q26NXLPQ5	3017132	247
Q26NXLPQ7	3017130	247
Q26PXLPQ5	3017131	247
Q26PXLPQ7	3017129	247
Q406E	3032375	254
Q406EQ	3033398	254
Q40SP6FF200	3032364	254
Q40SP6FF200Q	3033392	254
Q40SP6FF400	3032367	254
Q40SP6FF400Q	3033393	254
Q40SP6FF600	3032370	254
Q40SP6FF600Q	3034343	254
Q40SP6LP	3032361	254
Q40SP6LPQ	3033395	254
Q40SP6R	3032373	254
Q40SP6RQ	3033400	254
Q456E	3036563	254
Q456EQ5	3038659	259
Q459E	3037625	254
Q459EQ	3037635	271
Q45AD9CV	3037623	254
Q45AD9CV4	3037624	254
Q45AD9CV4Q	3037634	271
Q45AD9CVQ	3037633	271
Q45AD9D	3037617	254
Q45AD9DL	3037618	254
Q45AD9DLQ	3037628	271
Q45AD9DQ	3037627	271
Q45AD9F	3037621	254
Q45AD9FP	3037622	254
Q45AD9FPQ	3037632	271
Q45AD9FQ	3037631	271
Q45AD9LP	3037619	254
Q45AD9LPQ	3037629	271
Q45AD9LV	3037620	254
Q45AD9LVQ	3037630	271
Q45AD9R	3037626	254
Q45AD9RQ	3037636	271
Q45BB6CV	3036836	254
Q45BB6CV4	3036837	254
Q45BB6CV4Q5	3038662	259
Q45BB6CVQ5	3038661	259
Q45BB6D	3036558	254
Q45BB6DL	3036559	254
Q45BB6DLQ5	3038664	259
Q45BB6DQ5	3038663	259
Q45BB6DX	3042476	254

Type	Ident-Nr.	Page
Q45BB6DXQ5	3047138	259
Q45BB6LL	3037248	254
Q45BB6LLP	3039551	254
Q45BB6LLPQ6	3041033	259
Q45BB6LLQ6	3041032	259
Q45BB6LP	3036556	254
Q45BB6LPQ5	3038666	259
Q45BB6LV	3036557	254
Q45BB6LVQ5	3038665	259
Q45BB6R	3036562	254
Q45BB6RQ5	3038660	259
Q60BB6AF2000	3063000	261
Q60BB6AF2000Q	3063001	261
Q60BB6AFV1000	3070092	261
Q60BB6AFV1000Q	3070093	261
Q60BB6LAF1400	3071633	261
Q60BB6LAF1400Q	3071742	261
Q60BB6LAF2000	3071634	261
Q60BB6LAF2000Q	3071743	261
QC50A3P6XDWQ	3070826	263
QM-08	6945100	572
QM-12	6945101	572
QM-18	6945102	572
QM-30	6945103	573
QM426E	3044331	257
QM426EQ	3044334	257
QM42VP6AF150	3045688	257
QM42VP6AF150Q	3045690	257
QM42VP6D	3044333	257
QM42VP6DQ	3044336	257
QM42VP6LP	3044901	257
QM42VP6LPQ	3044903	257
QM42VP6R	3044332	257
QM42VP6RQ	3044335	257
QMT-12	6945106	572
QMT-18	6945104	573
QMT-30	6945105	573
QMT42VP6AFV400	3046856	257
QMT42VP6AFV400Q	3046858	257
QMT42VP6DXQ	3056897	257
QMT42VP6FF1000	3049233	257
QMT42VP6FF1000Q	3049234	257
QMT42VP6FF1500	3057545	257
QMT42VP6FF1500Q	3057546	257
QMT42VP6FF2000	3049237	257
QMT42VP6FF2000Q	3049238	257
QMT42VP6FF500	3049229	257
QMT42VP6FF500Q	3049230	257
QMT42VP6FF750Q	3057371	257
QS186E	3061618	235
QS186EB	3061675	235
QS186EBQ8	3066448	235
QS186EQ8	3066447	235

Type	Ident-Nr.	Page
QS186LE	3070252	235
QS186LE2	3075951	235
QS186LE2Q8	3074733	235
QS186LEQ8	3070253	235
QS18EN6CV15	3068850	236
QS18EN6CV15Q8	3071992	236
QS18EN6CV45	3068743	236
QS18EN6CV45Q8	3071988	236
QS18EN6D	3069205	236
QS18EN6DB	3068745	237
QS18EN6DBQ8	3071990	237
QS18EN6DQ8	3071994	236
QS18EN6LP	3068741	236
QS18EN6LPQ8	3070810	236
QS18EN6W	3069213	237
QS18EN6WQ8	3071996	237
QS18EP6CV15	3068851	236
QS18EP6CV15Q8	3071993	236
QS18EP6CV45	3068744	236
QS18EP6CV45Q8	3071989	236
QS18EP6D	3069209	236
QS18EP6DB	3068746	237
QS18EP6DBQ8	3071991	237
QS18EP6DQ8	3071995	236
QS18EP6DVBQ8	3079049	236
QS18EP6LP	3068742	236
QS18EP6LPQ8	3071987	236
QS18EP6W	3069217	237
QS18EP6WQ8	3071997	237
QS18UPA	3073155	235
QS18UPAE	3073165	235
QS18UPAEQ8	3073166	305
QS18UPAQ8	3073156	305
QS18VN6AF100	3065500	235
QS18VN6AF100Q5	3067643	235
QS18VN6AF300Q5	3010658	235
QS18VN6AF40	3012135	235
QS18VN6CV15	3061639	235
QS18VN6CV15Q8	3066455	235
QS18VN6CV45	3061645	235
QS18VN6CV45Q8	3066457	235
QS18VN6D	3061651	235
QS18VN6DB	3061663	235
QS18VN6DBQ8	3066465	235
QS18VN6DQ8	3066459	235
QS18VN6F	3002793	281
QS18VN6FF100	3071639	235
QS18VN6FF100Q8	3071878	235
QS18VN6FF50	3071637	235
QS18VN6FF50Q8	3071638	235
QS18VN6FP	3066222	281
QS18VN6FPQ8	3066467	281
QS18VN6FQ8	3071782	281

Type	Ident-Nr.	Page
QS18VN6LAF	3073184	235
QS18VN6LAF250	3075734	235
QS18VN6LAF250Q5	3075737	235
QS18VN6LAFQ5	3073187	235
QS18VN6LD	3073034	235
QS18VN6LDQ8	3073039	235
QS18VN6LLP	3073235	235
QS18VN6LLPQ8	3073240	235
QS18VN6LP	3061627	235
QS18VN6LPQ8	3066451	235
QS18VN6LV	3061633	235
QS18VN6LVQ8	3066453	235
QS18VN6R	3061621	235
QS18VN6RB	3061669	235
QS18VN6RBQ8	3066461	235
QS18VN6RQ8	3066449	235
QS18VN6W	3061657	235
QS18VN6WQ8	3066463	235
QS18VP6AF100	3065502	235
QS18VP6AF100Q5	3068326	236
QS18VP6AF300	3011394	235
QS18VP6AF300Q5	3010659	236
QS18VP6AF40	3012139	235
QS18VP6AF40Q5	3012142	236
QS18VP6AFF200	3011470	235
QS18VP6AFF200Q5	3011474	235
QS18VP6AFF40	3012183	235
QS18VP6AFF40Q5	3012186	236
QS18VP6CV15	3061642	235
QS18VP6CV15Q8	3066456	235
QS18VP6CV45	3061648	235
QS18VP6CV45Q8	3066458	235
QS18VP6D	3061654	235
QS18VP6DB	3061666	235
QS18VP6DBQ8	3066466	236
QS18VP6DQ8	3066460	235
QS18VP6F	3002796	281
QS18VP6FF100	3071641	235
QS18VP6FF100Q8	3071882	235
QS18VP6FF50	3071640	235
QS18VP6FF50Q8	3071755	235
QS18VP6FP	3066224	281
QS18VP6FPQ8	3066468	281
QS18VP6FQ8	3071778	281
QS18VP6LAF	3073188	235
QS18VP6LAF250	3075739	235
QS18VP6LAF250Q5	3075742	235
QS18VP6LAFQ5	3073191	236
QS18VP6LD	3073040	235
QS18VP6LDQ8	3073045	235
QS18VP6LLP	3073241	235
QS18VP6LLPQ8	3073246	235
QS18VP6LP	3061630	235

Type	Ident-Nr.	Page
QS18VP6LPQ8	3066452	235
QS18VP6LV	3061636	235
QS18VP6LVQ8	3066454	235
QS18VP6R	3061624	235
QS18VP6RB	3061672	235
QS18VP6RBQ8	3066462	236
QS18VP6RQ8	3066450	235
QS18VP6W	3061660	235
QS18VP6WQ8	3066464	236
QS30AF600	3011977	249
QS30AF600Q	3011980	249
QS30AFF400	3011984	249
QS30AFF400Q	3011987	249
QS30ARH2O	3079167	250
QS30ARH2OQ5	3079169	250
QS30ARXH2OQ5	3079175	250
QS30ARXSH2O	3083301	250
QS30D	3072604	249
QS30DQ	3073095	249
QS30E	3073081	249
QS30EDV	3076090	249
QS30EDVQ	3076092	249
QS30ELVC	3010133	249
QS30ELVCQ	3081102	249
QS30EQ	3073082	249
QS30EXH2O	3079164	250
QS30EXH2OQ5	3079166	250
QS30FF200	3072546	249
QS30FF200Q	3073086	249
QS30FF400	3073088	249
QS30FF400Q	3073089	249
QS30FF600	3073091	249
QS30FF600Q	3073092	249
QS30LD	3070230	249
QS30LDL	3002785	249
QS30LDLQ	3002786	249
QS30LDQ	3070231	249
QS30LLP	3002993	249
QS30LLPC	3071377	249
QS30LLPCQ	3071378	249
QS30LLPQ	3002994	249
QS30LP	3072544	249
QS30LPQ	3073084	249
QS30LV	3072605	249
QS30LVQ	3073094	249
QS30R	3073078	249
QS30RQ	3073079	249
QS30RRH2O	3079170	250
QS30RRH2OQ5	3079172	250
QS30RRXH2OQ5	3079178	250
QS30RRXSH2O	3083304	250
QT50UDB	3002722	323
QT50UDBQ6	3002724	323

Type	Ident-Nr.	Page
QT50ULB	3002726	323
QT50ULBQ6	3002728	323
R55F	3066379	285
R55FP	3058018	285
R55FPB	3058024	285
R55FPBQ	3058026	285
R55FPG	3058021	285
R55FPGQ	3058023	285
R55FPQ	3058020	285
R55FPW	3058027	285
R55FPWQ	3058029	285
R55FQ	3064634	285
R55FV	3058006	285
R55FVB	3058012	285
R55FVBQ	3058014	285
R55FVG	3058009	285
R55FVGQ	3058011	285
R55FVQ	3058008	285
R55FVW	3058015	285
R55FVWQ	3058017	285
R58ACG1	3010217	265
R58ACG1Q8	3010220	265
R58ACR1	3010225	265
R58ACR1Q8	3010228	265
R58ECRGB1	3074999	265
R58ECRGB1Q8	3081509	265
RB-R10	6900420	593
RD35	3082646	635
RFA-1	1544630	597
RFA-11	1544640	597
RFA-12	1544641	597
RFA-13	1544642	597
RFA-2	1544631	597
RFA-4	1544633	597
RFA-6	1544635	597
RFA-7	1544636	597
RFA-8	1544637	597
RFA-9	1544638	597
Ri-08S6S-2F1000-C 1M	1544061	531
Ri-08S6S-2F1024-C 1M	1544062	531
Ri-08S6S-2F360-C 1M	1544059	531
Ri-08S6S-2F500-C 1M	1544060	531
Ri-08S6S-2F512-C 1M	1545200	531
Ri-09H8E-2F360-C 1M	1544103	531
Ri-10S10C-2B2048-H1181	1545205	532
Ri-10S10C-2B2500-H1181	1544956	532
Ri-10S10C-2B360-H1181	1544754	532
Ri-10S10C-2B4096-H1181	1545207	532
Ri-10S10C-2B5000-H1181	1544758	532
Ri-10S10S-2B2048-H1181	1545214	532
Ri-10S10S-2B2500-H1181	1545215	532
Ri-10S10S-2B360-H1181	1545213	532
Ri-10S10S-2B4096-H1181	1545216	532

Type	Ident-Nr.	Page
Ri-10S10S-2B5000-H1181	1545217	532
Ri-10S6C-2B2048-H1181	1545201	532
Ri-10S6C-2B2500-H1181	1545202	532
Ri-10S6C-2B360-H1181	1544940	532
Ri-10S6C-2B4096-H1181	1545203	532
Ri-10S6C-2B5000-H1181	1545204	532
Ri-10S6S-2B2048-H1181	1545209	532
Ri-10S6S-2B2500-H1181	1545210	532
Ri-10S6S-2B360-H1181	1545208	532
Ri-10S6S-2B4096-H1181	1545211	532
Ri-10S6S-2B5000-H1181	1545212	532
Ri-12H10T-2B2048-H1181	1544727	532
Ri-12H10T-2B2500-H1181	1545218	532
Ri-12H10T-2B360-H1181	1544720	532
Ri-12H10T-2B4096-H1181	1544729	532
Ri-12H10T-2B5000-H1181	1545219	532
Ri-12H15T-2B2048-H1181	1545221	532
Ri-12H15T-2B2500-H1181	1545222	532
Ri-12H15T-2B360-H1181	1545220	532
Ri-12H15T-2B4096-H1181	1545223	532
Ri-12H15T-2B5000-H1181	1545224	532
RKC4.4T-2/TXL	6625503	563
RKC4.5T-2/TXL	6625506	563
RKC4T-2/TXL	6625500	563
RM-28S10C-3C25B-H1181	1545239	534
RM-28S10S-3C25B-H1181	1545241	534
RM-28S6C-3C25B-H1181	1545238	534
RM-28S6S-3C25B-H1181	1545240	534
RM-29S10C-9A28B-R3M12	1544416	533
RM-29S10S-9A28B-R3M12	1544418	533
RM-29S6C-9A28B-R3M12	1544413	533
RM-29S6S-9A28B-R3M12	1544417	533
RM-35H12E-3C25B-H1181	1545242	534
RM-36B12E-9A28B-R3M12	1544445	533
RM-46S8S-3C24B-CT 1M	1544521	534
RM-50H10E-3C24B-CT 1M	1544525	534
RME-10	1544621	599
RME-11	1544622	599
RME-15	1544626	599
RME-16	1544627	599
RME-17	1544628	599
RME-18	1544629	599
RME-5	1544616	598
RME-6	1544617	599
RMW-1	1544643	598
RMW-2	1544644	598
RMW-3	1544645	598
RMW-4	1544646	598
RMW-5	1544647	598
RMW-6	1544648	598
RMW-7	1544649	598
RMW-8	1544650	598
RMW-9	1544651	598

Type	Ident-Nr.	Page
RS-06S6S-7A12B-C 1M	1544037	534
RS-06S6S-8B12B-C 1M	1544039	534
RS-07H6E-7A12B-C 1M	1544045	534
RS-07H6E-8B12B-C 1M	1544055	534
RS-24S10C-3C13B-H1181	1545235	533
RS-24S10S-3C13B-H1181	1545237	533
RS-24S6C-3C13B-H1181	1545234	533
RS-24S6S-3C13B-H1181	1545236	533
RS-25S10C-9A16B-R3M12	1544367	533
RS-25S10S-9A16B-R3M12	1544365	533
RS-25S6C-9A16B-R3M12	1544363	533
RS-25S6S-9A16B-R3M12	1544364	533
RS-31H12E-3C13B-H1181	1544424	533
RS-33B12E-9A16B-R3M12	1544434	533
RS-54S6S-5B9B-C 1M	1545231	534
RS-55H6E-5B9B-C 1M	1545233	534
RU100-CP40-AP6X2	16100	321
RU100-CP40-LIUX	15349	321
RU100-M18-AP8X-H1141	1810200	311
RU100-M18-LIX-H1141	1810205	311
RU100-Q30-AP8X-H1141	1820200	319
RU100-Q30-LUX-H1141	1820205	319
RU20-M18K-LFX-H1141	1830030	309
RU20-M18KS-LFX-H1141	1830032	309
RU30-M18-AP8X-H1141	1810000	311
RU30-M18-LIX-H1141	1810005	311
RU30-Q30-AP8X-H1141	1820000	319
RU30-Q30-LUX-H1141	1820005	319
RU70-M18K-LFX-H1141	1830031	309
RU70-M18KS-LFX-H1141	1830033	309
RUC130-M30-2AP8X-H1151	1840220	315
RUC130-M30-AP8X-H1141	1840200	315
RUC130-M30-LIAP8X-H1151	1840230	315
RUC300-M3047-2AP8X-H1151	1840420	315
RUC300-M3047-AP8X-H1141	1840400	315
RUC300-M3047-LIAP8X-H1151	1840430	315
RUC30-M30-2AP8X-H1151	1840020	315
RUC30-M30-AP8X-H1141	1840000	315
RUC30-M30-LIAP8X-H1151	1840031	315
RUC600-M3065-2AP8X-H1151	1840620	315
RUC600-M3065-AP8X-H1141	1840600	315
RUC600-M3065-LIAP8X-H1151	1840630	315
RUN20-M18K-AP8X-H1141	1830034	309
RUN20-M18KS-AP8X-H1141	1830038	309
RUN70-M18K-AP8X-H1141	1830035	309
RUN70-M18KS-AP8X-H1141	1830039	309
RU-PDI	1890000	639
RUR20-M18K-AP8X-H1141	1830036	309
RUR20-M18KS-AP8X-H1141	1830040	309
RUR70-M18K-AP8X-H1141	1830037	309
RUR70-M18KS-AP8X-H1141	1830041	309
S186E	3029409	179
S186EQ	3029507	241

Type	Ident-Nr.	Page
S18SN6D	3029407	179
S18SN6DL	3031173	179
S18SN6DLQ	3031174	179
S18SN6DQ	3029505	179
S18SN6FF100	3029086	179
S18SN6FF100Q	3030866	179
S18SN6FF25	3056607	179
S18SN6FF25Q	3037298	179
S18SN6FF50	3028940	179
S18SN6FF50Q	3030867	179
S18SN6L	3028556	179
S18SN6LP	3032725	179
S18SN6LPQ	3033449	179
S18SN6LQ	3029511	179
S18SN6R	3029408	179
S18SN6RQ	3029506	179
S18SP6D	3029410	179
S18SP6DL	3031175	179
S18SP6DLQ	3031176	241
S18SP6DQ	3029508	179
S18SP6FF100	3030326	179
S18SP6FF100Q	3030884	241
S18SP6FF25	3058415	179
S18SP6FF25Q	3050561	241
S18SP6FF50	3030325	179
S18SP6FF50Q	3030883	241
S18SP6L	3029411	179
S18SP6LP	3032726	179
S18SP6LPQ	3033450	241
S18SP6LQ	3029509	241
S18SP6R	3029412	179
S18SP6RQ	3029510	241
S18UBA	3002711	179
S18UBAQ	3002712	307
S18UBAR	3002714	179
S18UBARQ	3002715	307
S18UIA	3002702	179
S18UIAQ	3002703	307
S18UIAR	3002708	179
S18UIARQ	3002709	307
S18UUA	3002699	179
S18UUAQ	3002700	307
S18UUAR	3002705	179
S18UUARQ	3002706	307
S306E	3032341	180
S306EQ	3033376	253
S30SP6FF200	3032330	180
S30SP6FF200Q	3033370	253
S30SP6FF400	3032333	180
S30SP6FF400Q	3033371	253
S30SP6FF600	3032336	180
S30SP6FF600Q	3034346	253
S30SP6LP	3032327	180

Type	Ident-Nr.	Page
S30SP6LPQ	3033373	253
S30SP6R	3032339	180
S30SP6RQ	3033378	253
SG40/2 (ULTEM)	69497	574
SKN/M12	69662	575
SKN/M18	69663	575
SKN/M30	69664	575
SC-M12/3GD	6900390	576
SC-M8/3GD	6900515	576
SG-DSU35TC	6900437	580
SG-Q20L60	6901100	574
SI15-K30-AN6X	1605003	110
SI15-K30-AP6X	1605001	110
SI15-K30-AZ3	13069	110
SI15-K30-RZ3	13169	110
SI15-K30-Y1X	1007601	110
SI2-K08-AN7	1719601	109
SI2-K08-AP7	1719501	109
SI2-K08-Y1	1007700	109
SI3,5-K10-AP6X	1650001	110
SI3,5-K10-Y1	10090	110
SI3,5-K10-Y1X	40490	110
SI5-K09-Y1	10075	109
SLM10B6	3074965	273
SLM10P6Q	3074966	273
SLM120B6	3074985	273
SLM120P6Q	3074986	273
SLM180B6	3079218	273
SLM180P6Q	3079215	273
SLM20B6	3079217	273
SLM20P6Q	3079213	273
SLM220B6	3074989	273
SLM220P6Q	3074990	273
SLM30B6	3074969	273
SLM30P6Q	3074974	273
SLM50B6	3074977	273
SLM50P6Q	3074978	273
SLM80B6	3074981	273
SLM80P6Q	3074982	273
SMB1815SF	3053279	566
SMB18A	3470200	565
SMB18C	3032635	566
SMB18FA	3074004	565
SMB18Q	3032721	566
SMB18SF	3052519	566
SMB3018SC	3053952	567
SMB30A	3032723	567
SMB30C	3470100	565
SMB30Q	3032722	567
SMB30SC	3052521	567
SMB30SK	3052523	565
SMB312B	3025519	566
SMB312S	3025518	566

Type	Ident-Nr.	Page
SMB46A	3052518	568
SMB46L	3048747	568
SMB46S	3048748	568
SMB46U	3048746	568
SMBAMS18P	3073134	566
SMBAMS18RA	3073136	566
SMBAMS30P	3073135	569
SMBAMS30RA	3073137	567
SMBAMSLT3IP	3073442	574
SMBAMSLT3P	3073132	569
SMBAMSQ60IP	3073441	574
SMBAMSQ60P	3073133	569
SMBDX80DIN	3077161	569
SMBIVUB	3082548	636
SMBIVURAL	3082546	635
SMBIVURAR	3082547	635
SMBIVUU	3082549	636
SMBLT31	3068505	568
SMBLT32	3069236	574
SMBLT7	3073711	568
SMBLX	3002915	569
SMBLXR	3002914	568
SMBPVA1	3056884	569
SMBQ12A	3074341	566
SMBQ12T	3073722	565
SMBQ50	3066226	568
SMBQ60	3067592	568
SMBQS12PD	3059606	565
SMBQS18A	3069721	567
SMBQS18AF	3067467	567
SMBQS18Y	3068865	574
SMBQS30L	3002809	567
SMBQS30LT	3002810	567
SMBQS30Y	3002811	574
SMBQS30YL	3072741	574
SOK-K50L-150SS	3078908	569
SOK-K50L-300SS	3078909	569
SPF1-AP6X	6900375	576
SPM-AL-R10	6900412	593
SPN1-AP6-ARN6X	6930231	576
SPS-R10	6900413	593
SPT1-AP6X	6915091	577
STM-AL-R10	6900409	593
STS-R10	6900411	592
T186E	3032468	242
T186EQ	3033420	242
T18SN6D	3033814	242
T18SN6DQ	3034630	242
T18SN6FF100	3032466	242
T18SN6FF100Q	3033413	242
T18SN6FF25	3058110	242
T18SN6FF25Q	3058392	242
T18SN6FF50	3032465	242

Type	Ident-Nr.	Page
T18SN6FF50Q	3033412	242
T18SN6L	3034655	242
T18SN6LP	3032467	242
T18SN6LPQ	3033416	242
T18SN6LQ	3034739	242
T18SN6R	3032469	242
T18SN6RQ	3033421	242
T18SP6D	3034629	242
T18SP6DQ	3034631	242
T18SP6FF100	3032471	242
T18SP6FF100Q	3033415	242
T18SP6FF25	3056559	242
T18SP6FF25Q	3041618	242
T18SP6FF50	3032470	242
T18SP6FF50Q	3033414	242
T18SP6L	3034683	242
T18SP6LP	3032472	242
T18SP6LPQ	3033417	242
T18SP6LQ	3034740	242
T18SP6R	3032473	242
T18SP6RQ	3033422	242
T306E	3032483	253
T306EQ	3033442	253
T30SP6FF200	3032485	253
T30SP6FF200Q	3033436	253
T30SP6FF400	3032486	253
T30SP6FF400Q	3033437	253
T30SP6FF600	3032487	253
T30SP6FF600Q	3034349	253
T30SP6LP	3032488	253
T30SP6LPQ	3033439	253
T30SP6R	3032489	253
T30SP6RQ	3033444	253
T30UXDA	3079993	317
T30UXDAQ8	3079995	317
T30UXDB	3079998	317
T30UXDBQ8	3080058	317
T30UXDC	3080458	317
T30UXDCQ8	3080460	317
T30UXIA	3080479	317
T30UXIAQ8	3080481	317
T30UXIB	3080484	317
T30UXIBQ8	3080486	317
T30UXIC	3080489	317
T30UXICQ8	3080491	317
T30UXUA	3080463	317
T30UXUAQ8	3080465	317
T30UXUB	3080468	317
T30UXUBQ8	3080471	317
T30UXUC	3080474	317
T30UXUCQ8	3080476	317
T86EV	3066671	229
T86EVQ	3066672	229

Type	Ident-Nr.	Page
T8AP6D100	3068688	229
T8AP6D100Q	3068689	229
T8AP6D50	3066659	229
T8AP6D50Q	3066660	229
T8AP6R	3066667	229
T8AP6RQ	3066668	229
T8RP6D100	3068690	229
T8RP6D100Q	3068691	229
T8RP6D50	3066661	229
T8RP6D50Q	3066662	229
T8RP6R	3066669	229
T8RP6RQ	3066670	229
TB3-CP80	6967112	577
TB4	6967113	577, 589
TC-100-AP6-H1140	9910442	457
TC-100-AP6-H1140/S713	9910559	457
TC-103A-G1/8-AP6-H1140-L013	9910439	458
TC-103A-G1/8-AP6-H1140-L024	9910440	458
TGR3/8MPFMQ	3023268	626
TGRM8MM	3775000	633
THW-3-DN25K-A4-L050	9910455	605
THW-3-DN25K-A4-L100	9910456	605
THW-3-DN25K-A4-L150	9910457	605
THW-3-DN25K-A4-L250	9910458	605
THW-3-DN25K-L035	9910435	605
THW-3-G1/2-A4-L050	9910443	605
THW-3-G1/2-A4-L100	9910444	605
THW-3-G1/2-A4-L150	9910445	605
THW-3-G1/2-A4-L250	9910446	605
THW-3-G1/4-A4-L050	9910415	605
THW-3-G1/4-A4-L100	9910419	606
THW-3-G1/4-A4-L150	9910423	606
THW-3-G1/4-A4-L200	9910427	606
THW-3-G1/8-A4-L050	9910413	606
THW-3-G1/8-A4-L100	9910417	606
THW-3-G1/8-A4-L150	9910421	606
THW-3-G1/8-A4-L200	9910425	606
THW-3-N1/2-A4-L050	9910447	606
THW-3-N1/2-A4-L100	9910448	606
THW-3-N1/2-A4-L150	9910449	606
THW-3-N1/2-A4-L250	9910450	607
THW-3-N1/4-A4-L050	9910416	607
THW-3-N1/4-A4-L100	9910420	607
THW-3-N1/4-A4-L150	9910424	607
THW-3-N1/4-A4-L200	9910428	607
THW-3-N1/8-A4-L050	9910414	607
THW-3-N1/8-A4-L100	9910418	607
THW-3-N1/8-A4-L150	9910422	607
THW-3-N1/8-A4-L200	9910426	607
THW-3-TRI3/4-A4-L035	9910433	607
THW-3-TRI3/4-A4-L050	9910451	608
THW-3-TRI3/4-A4-L100	9910452	608
THW-3-TRI3/4-A4-L150	9910453	608

Type	Ident-Nr.	Page
THW-3-TRI3/4-A4-L250	9910454	608
THW-3-UNI25-A4-L035	9910502	610
THW-3-UNI25-A4-L100	9910503	610
THW-6-DN25K-A4-L050	9910471	610
THW-6-DN25K-A4-L100	9910436	608
THW-6-DN25K-A4-L150	9910472	610
THW-6-DN25K-A4-L250	9910473	610
THW-6-G1/2-A4-L050	9910459	608
THW-6-G1/2-A4-L100	9910460	609
THW-6-G1/2-A4-L150	9910461	609
THW-6-G1/2-A4-L250	9910462	609
THW-6-N1/2-A4-L050	9910463	609
THW-6-N1/2-A4-L100	9910464	609
THW-6-N1/2-A4-L150	9910465	609
THW-6-N1/2-A4-L250	9910466	609
THW-6-TRI3/4-A4-L050	9910467	609
THW-6-TRI3/4-A4-L100	9910468	609
THW-6-TRI3/4-A4-L150	9910469	609
THW-6-TRI3/4-A4-L250	9910470	610
TL50BLBGYRQ	3019280	549
TL50BLGRQ	3019277	549
TL50BLGYRQ	3019278	549
TL50BLRQ	3019275	549
TL50HBGYR	3014600	549
TL50HBGYRQ	3014589	549
TL50HGYR	3014595	549
TL50HGYRQ	3014586	549
TL50HWBGYRQ	3016608	549
TL50WBGYR	3083225	549
TP-103A-G1/8-H1141-L013	9910400	473
TP-103A-G1/8-H1141-L024	9910401	473
TP-203A-CF-H1141-L100	9910402	473
TP-203A-CF-H1141-L150	9910403	473
TP-203A-CF-H1141-L200	9910482	473
TP-203A-CF-H1141-L250	9910404	473
TP-203A-CF-H1141-L300	9910474	473
TP-206A-CF-H1141-L100	9910475	474
TP-206A-CF-H1141-L150	9910476	474
TP-206A-CF-H1141-L200	9910477	474
TP-206A-CF-H1141-L300	9910478	474
TP-306A-CF-H1141-L1000	9910479	474
TP-306A-CF-H1141-L5000	9910481	474
TS-400-2UPN8X-H1141	6840017	449
TS-400-LI2UPN8X-H1141	6840007	449
TS-400-LUUPN8X-H1141	6840008	449
TS-500-2UPN8X-H1141	6840018	451
TS-500-LI2UPN8X-H1141	6840015	451
TS-500-LUUPN8X-H1141	6840016	451
TT-100-LI6-H1140	9910441	457
TT-103A-G1/8-LI6-H1140-L013	9910437	458
TT-103A-G1/8-LI6-H1140-L024	9910438	458
TT-206A-CF-LI6-H1140-L0100	9910489	459
TT-206A-CF-LI6-H1140-L0150	9910490	459

Type	Ident-Nr.	Page
TTM050C-103A-G1/8-LI6-H1140-L013 -50...50°C	9910550	465
TTM050C-103A-G1/8-LI6-H1140-L024 -50...50°C	9910552	465
TTM050C-203A-CF-LI6-H1140-L100 -50...50°C	9910539	465
TTM050C-203A-CF-LI6-H1140-L150 -50...50°C	9910540	465
TTM050C-206A-CF-LI6-H1140-L100 -50...50°C	9910547	465
TTM050C-206A-CF-LI6-H1140-L150 -50...50°C	9910548	465
TTM100C-103A-G1/8-LI6-H1140-L013	9910549	465
TTM100C-103A-G1/8-LI6-H1140-L024	9910551	465
TTM100C-203A-CF-LI6-H1140-L100	9910533	465
TTM100C-203A-CF-LI6-H1140-L150	9910534	465
TTM100C-206A-CF-LI6-H1140-L100	9910541	466
TTM100C-206A-CF-LI6-H1140-L150	9910542	466
TTM150C-203A-CF-LI6-H1140-L100	9910535	465
TTM150C-203A-CF-LI6-H1140-L100 -50...150°C	9910537	465
TTM150C-203A-CF-LI6-H1140-L150	9910536	465
TTM150C-203A-CF-LI6-H1140-L150 -50...150°C	9910538	465
TTM150C-206A-CF-LI6-H1140-L100	9910543	466
TTM150C-206A-CF-LI6-H1140-L100 -50...150°C	9910545	465
TTM150C-206A-CF-LI6-H1140-L150	9910544	466
TTM150C-206A-CF-LI6-H1140-L150 -50...150°C	9910546	465
TX1-Q20L60	6967114	589, 595
UNT-Justage	4685750	584, 585
UNT-Stopper	4685751	584, 585
UWG18-5.0	3077342	639
UWG18-6.4	3076952	639
VB2-SP2	6999083	639
VS1AP5CV10	3056494	227
VS1AP5CV10Q	3059177	227
VS1AP5CV20	3056498	227
VS1AP5CV20Q	3059178	227
VS1RP5CV10	3056495	227
VS1RP5CV10Q	3063088	227
VS1RP5CV20	3056499	227
VS1RP5CV20Q	3063095	227
VS25EV	3055401	227
VS25EVQ	3059161	227
VS2AP5CV15	3061745	227
VS2AP5CV15Q	3063075	227
VS2AP5CV30	3061749	227
VS2AP5CV30Q	3063079	227
VS2AP5R	3055404	227
VS2AP5RQ	3061596	227
VS2RP5CV15	3061747	227
VS2RP5CV15Q	3063077	227
VS2RP5CV30	3061751	227
VS2RP5CV30Q	3063081	227
VS2RP5R	3055405	227
VS2RP5RQ	3059175	227
VS3AP5XLP	3062623	228
VS3AP5XLPQ	3062624	228
VS3RP5XLP	3062625	228
VS3RP5XLPQ	3062626	228
VS4AP5R	3069425	229
VS4AP5RQ	3069430	229
VS4EV	3069422	229
VS4EVQ	3069427	229
VS4RP5R	3069426	229
VS4RP5RQ	3069431	229
VSM46E	3013286	360
VSM4AP6CV10	3013340	360
VSM4AP6CV20	3013357	360
VSM4AP6CV50	3013279	360
VSM4RP6R	3013296	360
VSM56E	3013317	360
VSM5AP6CV10	3013374	360
VSM5AP6CV20	3013378	360
VSM5AP6CV50	3013305	360
VSM5RP6R	3013330	360
VSMQAP6CV20	3013383	360
VSMQAP6CV50	3013385	360
VSMQAP6CV90	3013397	360
WI40-M18-LIU5	1536603	125
WI70-M18-LIU5	1536600	125
WIM100-Q25L-LIU5X2-H1141	1536630	507
WIM125-Q25L-LIU5X2-H1141	1536631	507
WIM160-Q25L-LIU5X2-H1141	1536632	507
WIM200-Q25L-LIU5X2-H1141	1536633	507
WIM45-UNTL-0,3-BIM-UNT-LUAP6X 4-H1141	1536623	205
WIM45-UNTL-LIU5X2-0,3-PSG4M	1536620	205
WIM45-UNTL-LIU5X2-0,3-RS4	1536621	205
WKC4.4T-2/TXL	6625515	563
WKC4.5T-2/TXL	6625518	563
WKC4T-2/TXL	6625512	563
WL50	3013481	555
WL50F	3010984	555
WL50FPB	3011625	555
WL50FPBQ	3011626	555
WL50FQ	3010985	555
WL50PB	3013484	555
WL50PBQ	3013486	555
WL50Q	3012972	555
WLAW105X180	3017610	551
WLAW105X180Q	3017605	551
WLAW190X180	3017611	551
WLAW190X180Q	3017607	551
WLAW275X180	3017614	551
WLAW275X180Q	3017608	551
WLAW360X180	3017615	551
WLAW360X180Q	3017609	551

Hans Turck GmbH & Co. KG ▪ Tel. +49 (208) 49 52-0 ▪ Fax +49 (208) 49 52-264

TURCK

Industrial
Automation

TURCK WORLD-WIDE HEADQUARTERS

GERMANY
Hans TURCK GmbH & Co. KG
Witzlebenstraße 7
45472 Mülheim an der Ruhr
Germany
P. O. Box 45466 Mülheim an der Ruhr
Phone +49 208 4952-0
Fax +49 208 4952-264
more@turck.com
www.turck.com

AUSTRALIA
TURCK Australia Pty. Ltd.
Victoria
Phone +61 3 95609066
australia@turck.com
www.turck.com.au

AUSTRIA
TURCK GmbH
Vienna
Phone +43 1 48615870
austria@turck.com
www.turck.at

BAHRAIN
TURCK Middle East S.P.C.
Manama
Phone +973 13 638288
middleeast@turck.com
www.turck.de/en

BELGIUM
MULTIPROX N. V.
Aalst
Phone +32 53 766566
mail@multiprox.be
www.multiprox.be

BRAZIL
Turck do Brazil Ltda.
São Paulo
Phone +55 11 26712464
brazil@turck.com
www.turck.com.br

CHINA
TURCK (Tianjin) Sensor Co. Ltd.
Tianjin
Phone +86 22 83988188
china@turck.com
www.turck.com.cn

CZECH REPUBLIC
TURCK s.r.o.
Hradec Králové
Phone +420 495 518766
czechrepublic@turck.com
www.turck.cz

FRANCE
TURCK BANNER S.A.S
Marne-La-Vallee
Phone +33 1 60436070
info@turckbanner.fr
www.turckbanner.fr

GREAT BRITAIN
TURCK BANNER Ltd.
Wickford
Phone +44 1268 578888
info@turckbanner.co.uk
www.turckbanner.co.uk

HUNGARY
TURCK Hungary kft.
Budapest
Phone +36 1 4770740
hungary@turck.com
www.turck.hu

INDIA
TURCK India Automation Pvt Ltd.
Pune
Phone +91 20 25630039
india@turck.com
www.turck.co.in

ITALY
TURCK BANNER S. R. L.
Bareggio
Phone +39 290364291
info@turckbanner.it
www.turckbanner.it

JAPAN
TURCK Japan Corporation
Tokyo
Phone +81 3 57722820
japan@turck.com
www.turck.jp

KOREA (SOUTH)
TURCK Korea Co. Ltd.
Seoul
Phone +82 31 500 4555
korea@turck.com
www.sensor.co.kr

MEXICO
TURCK Mexico S. DE R.L. DE C.V.
Saltillo
Phone +52 844 4116650
mexico@turck.com
www.turck.com.mx

THE NETHERLANDS
TURCK B. V.
Zwolle
Phone +31 38 4227750
netherlands@turck.com
www.turck.nl

POLAND
TURCK sp.z o.o
Opole
Phone +48 77 4434800
poland@turck.com
www.turck.pl

ROMANIA
TURCK Automation Romania SRL
Bucharest
Phone +40 21 2300279
romania@turck.com
www.turck.ro

RUSSIA
TURCK Rus O.O.O.
Moscow
Phone +7 495 2342661
russia@turck.com
www.turck.ru

SINGAPORE
TURCK Singapore Pte. Ltd.
Singapore
Phone +65 65628716
singapore@turck.com
www.turck.com.sg

SWEDEN
TURCK Consulting Office
Västra Frölunda
Phone +46 10 4471600
sweden@turck.com
www.turck.se

TURKEY
TURCK Otomasyon Tic. Ltd. Şti.
Istanbul
Phone +90 216 5722177
turkey@turck.com
www.turck.com.tr

USA
TURCK Inc.
Minneapolis
Phone +1 763 5537300
usa@turck.com
www.turck.us

... and more than 60 representatives and agencies world-wide.

To get all product information, just scan the QR code with a smart-phone or webcam.

Hans Turck GmbH & Co. KG
Witzlebenstraße 7
45472 Mülheim an der Ruhr
Germany
Tel. +49 208 4952-0
Fax +49 208 4952-264
E-Mail more@turck.com
Internet www.turck.com

D101801 2012/11

Subject to change without notice